THE CITY OF BRENTWOOD

HERITAGE • VISION • OPPORTUNITY

Public Works Department
Engineering Division

Standard Plans and Specifications

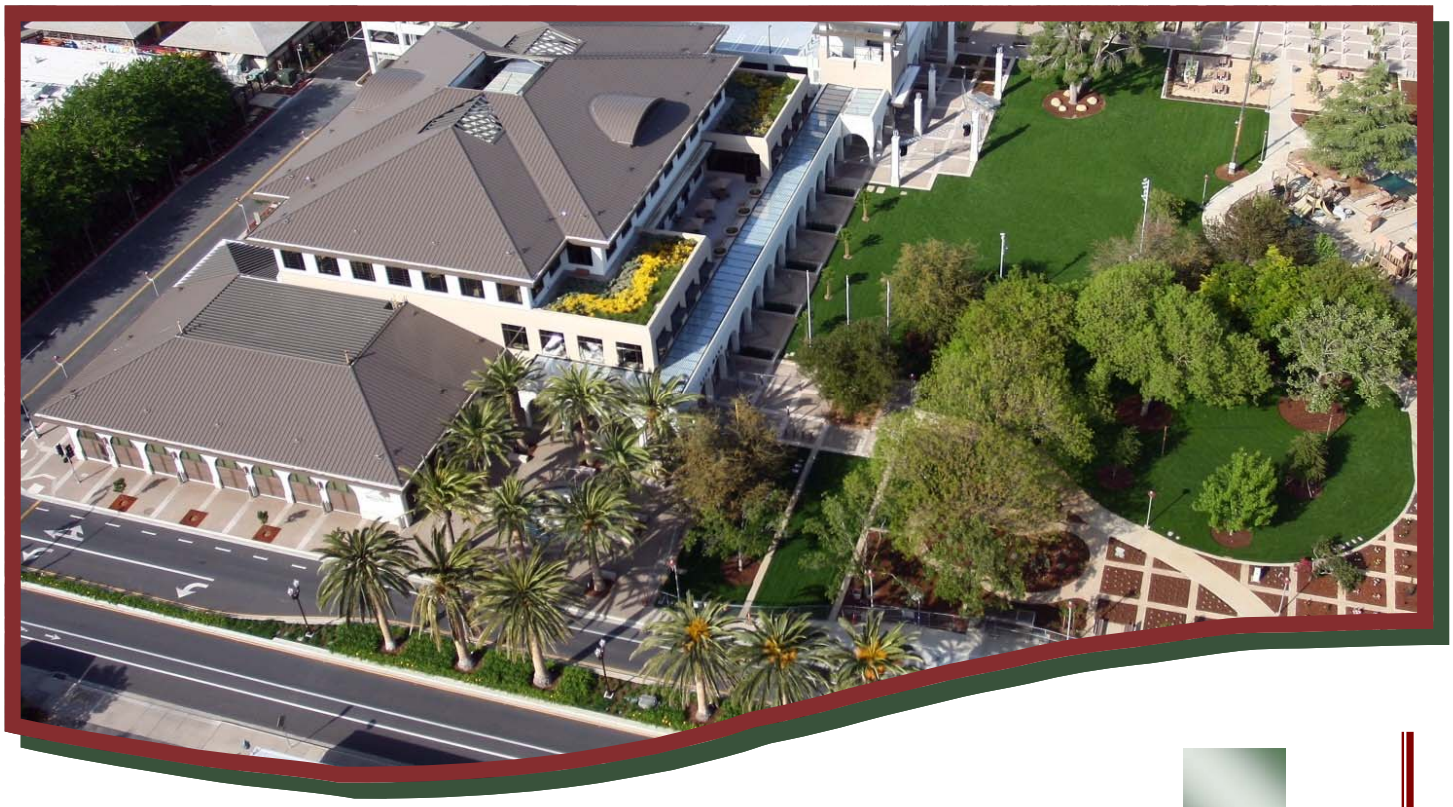

Revised: February 5, 2016
January 2014

150 City Park Way ~ Brentwood ~ California ~ 94513

CITY OF BRENTWOOD

STATE OF CALIFORNIA

STANDARD PLANS AND SPECIFICATIONS

REMARK

The City Engineer, on behalf of and as authorized by the CITY OF BRENTWOOD, STATE OF CALIFORNIA, requires that all public and private improvements within the City of Brentwood shall be constructed in accordance with these Standard Plans and Specifications. The Standard Plans and Specifications are defined as these Standard Plans and Specifications and supplemented by the State of California, Department of Transportation (Caltrans), Standard Plans and Specifications dated July 2010.

In case of conflict, the Standard Plans of the City of Brentwood take precedence over the City of Brentwood Specifications, which take precedence over the Caltrans Standard Plans and Specifications.

The Standard Plans and Specifications may be modified in special cases on a case-by-case basis by the City Engineer as per Resolution No. 97-72 (see Appendix A).

Amendments to the Caltrans Standard Specifications may be issued by the State of California and will require adoption by the City Engineer to become a part of the City of Brentwood Standard Specifications.

The City Engineer may also issue clarifications and amendments to these Standard Plans and Specifications as required.

Interpretations of the Standard Plans and Specifications can be obtained from the City Engineer.

The date of the last revision of these Standard Specifications is February 5, 2016. It is the responsibility of all persons to utilize the Standard Plans and Specifications containing the latest revision.

Exceptions

Whenever a Developer submits a tentative plan, grading plan, facility plan or other, all exceptions to the City of Brentwood Standards shall be indicated in a separate block on either the 1st or 2nd page. Each exception approved shall have the City Engineer's signature next to each exception.

In the event any or all exceptions are not listed in a separate block and regardless of items overlooked during plan checking, the Developer/Contractor will be required to provide construction as per the Standard Plans and Specifications.

Standard Plans and Specifications Availability and Comments

Copies of these Standard Plans and Specifications may be obtained by downloading, in a PDF format, from the City's website:
(www.brentwoodca.gov/gov/pw/development/reference_information.asp)

Interested parties who wish to suggest changes or amendments to these Standard Plans and Specifications may contact the City Engineer at (925) 516-5420 or send an e-mail to engineering@brentwoodca.gov, for consideration.

INDEMNIFICATION NOTICE

To the fullest extent allowed by law, Developer and its agents, including but not limited to contractors performing work required by the City of Brentwood, shall defend, indemnify, and hold harmless the City of Brentwood, its elected and appointed officials, agents and employees, from all liability, penalties, cost, losses, damages, expenses, causes of action, claims, or judgments, including attorney's fees and other defense costs, resulting from injury to or death sustained by any person (including Developer's and any contractor's employees), or damage to property of any kind, or any other damage whatsoever, which injury, death, or damage arises out of or related to the performance of work under this contract, including any of the same resulting from the City of Brentwood's alleged or actual negligent act or omission, or that of its officials, agents or employees; except that the obligation to indemnify shall not be applicable to injury, death, or damage to the property arising from the active negligence or willful misconduct of the City of Brentwood. This indemnification agreement shall extend to claims asserted after termination of this contract for whatever reason.

Without limiting the generality of the foregoing indemnity, such indemnity obligation expressly extends to and includes any and all claims, demands, damages, costs, expenses, fines, penalties, or liability occasioned as a result of:

1. Damages to adjacent property related to construction of the work;
2. The violation by Developer's agents, employees, or independent contractors or subcontractors, or any provisions of federal, state, or local law, including applicable administrative regulations;
3. Injury to or death of any person, or any property damage to property owned by any person, while on or about the project site or as a result of the work, whether such persons are on or about the project site by right or not, whenever the work is alleged to have been a contributing cause in any degree whatsoever.

In the event the Developer and its agents, including but not limited to contractors performing work required by the City of Brentwood, enter into any agreement with owners of any adjacent property to enter upon or adjacent to such property for the purpose of performing this contract, shall fully indemnify, defend, and save harmless such person, firm, corporation, or state or other governmental agency which owns or has any interest in such adjacent property. The form and content of such indemnification agreement shall be approved by the City of Brentwood prior to commencement of any work on or about such property. These provisions shall be in addition to any other requirements of owners of said property.

TABLE OF CONTENTS

STANDARD SPECIFICATIONS

DESCRIPTION **PAGE NO.**

SECTION 1 - General 1

1.01 General 1

SECTION 16 - Clearing And Grubbing 2

16-1.01 Preservation of Property 2
16-1.03 Construction 2

SECTION 19 - Earthwork 3

19-5.03B Compaction Section (95 Percent) 3
19-5.03C Compaction (90 Percent) 3
19-8.01 Geogrid Installation 3

SECTION 26 - Aggregate Base 4

26-1.02 Materials 4

SECTION 39 - Hot Mix Asphalt 5

39-1.02 Materials 5
39-9.0 Deep Strength (or Deep Lift) Asphalt Concrete 5
39-9.01 Description 5
39-9.02 Grades 5
39-9.03 Thickness 5
39-9.04 Tack Coat 5
39-9.05 General Requirements 6
39-9.06 Material 6
39-9.07 Spreading and Compacting 6
39-9.08 Testing 7

SECTION 75 - Miscellaneous Metal 8

75-1.02B Manhole Frames, Grates and Covers 8
75-1.02BB Identifying Castings 8

SECTION 81 - Monuments 9

81-1.01 General 9
81-1.02 Materials 9
81-1.03 Construction 9

SECTION 86 - Electrical Systems 11

86-1.01 Summary 11
86-1.07 Scheduling of Work 11
86-2.01 Excavating and Backfilling 11
86-2.03 Foundations 11
86-2.04 Standards, Poles, Steel Pedestals and Posts 12
86-2.05 Conduit 12
86-2.06 Pull Boxes 12
86-2.08 Conductors and Cables 12
86-2.09F Fused Splice Connectors 12
86-2.11 Service 12
86-2.14 Testing 13
86-2.16 Painting 13
86-3.01 to 86-3.04 Controller Assemblies 13
86-3.05A Pre-emption Equipment 14
86-3.05B Solid State Switching Devices 15
86-3.05C Flash Transfer Relay 15
86-4.01 Vehicle Signal Faces 15
86-4.03 Pedestrian Signal Faces 15
86-5.01 Vehicle Detectors 15
86-6.01 High Pressure Sodium Luminaires 15
86-6.01A High Pressure Sodium Lamp Ballasts 16
86-6.01B High Pressure Sodium Lamps 16
86-6.09 Internally Illuminate Street Name Signs 16
86-6.11 Photoelectric Controls 16

SECTION 90 - Concrete 17

90-1.01 General 17
90-1.01C(4) Admixtures 17

SECTION 110 - Storm Drain Facilities 18

110-1.01 Description 18
110-1.01A Right of Way 18
110-1.02 Materials 18
110-1.02A Reinforced Concrete Pipe 18
110-1.03 Excavation and Backfill 19
110-1.04 Bedding and Initial Backfill 19
110-1.05 Pipe Laying 20
110-1.06 Pipe Joints 21
110-1.07 Existing Manholes 22
110-1.08 Storm Drain Structures 22
110-1.09 Trench Resurfacing 23
110-1.10 Testing 23

SECTION 120 - Sewer Facilities 24

120-1.01 Description 24
120-1.01A Right of Way 24
120-1.02 Materials 24
120-1.02A Reinforced Concrete Sewer Pipe 24
120-1.02B Clay Sewer Pipe 24
120-1.02C Ductile Iron Pipe 24
120-1.02D Polyvinylchloride (PVC) Sewer Pipe 25
120-1.02E Resilient Joint Material 25
120-1.02F Rubber Gasketed Joints 25
120-1.02G Reinforcement 25
120-1.02H Concrete 25
120-1.03 Excavation and Backfill 25
120-1.04 Bedding and Initial Backfill 26
120-1.05 Pipe Laying 27
120-1.06 Pipe Joints 28
120-1.07 Existing Manholes 29
120-1.08 Sewer Structures 30
120-1.09 Coating Manholes 31
120-1.10 Trench Resurfacing 32
120-1.11 Testing 32
120-1.11A Cleaning 32
120-1.11B General 32
120-1.11C Air Pressure Test 33
120-1.11D Televising of Sanitary Sewers 35
120-1.11E Manhole Vacuum Test 35

SECTION 130 - Potable Water Facilities 37

130-1.01 Description 37
130-1.01A Right of Way 37
130-1.02 Materials 37
130-1.02A Ductile Iron Pipe 37
130-1.02B Polyvinylchloride (PVC) Pipe 38
130-1.02C Valves 38
130-1.02D Cast Iron Fittings 40
130-1.02E Valve Boxes 40
130-1.02F Gaskets 40
130-1.02G Thrust Blocks 40
130-1.02H Fire Hydrants 40
130-1.02I Service Lines 41

130-1.02J Water Meters 41

130-1.03 Installation 41
130-1.03A Installation of Water Mains 41
130-1.03A1 Description 41
130-1.03A2 Excavation 42
130-1.03A3 Jacking and Boring 42
130-1.03A4 Pipe Laying 42
130-1.03A5 Backfilling 42
130-1.03A6 Trench Resurfacing 43
130-1.03B1 Testing 43
130-1.03B2 Interruption of Service 43
130-1.03C Disinfecting Water Mains 43
130-1.03C1 General 44
130-1.03C2 Isolation of New Mains 44
130-1.03C3 Method No. 1 - H.T.H. Tablet Method 44
130-1.03C4 Method No. 2 - H.T.H. Solution with Hand Pump Method 45
130-1.04 Existing Pipes 47
130-1.04A Removal and Disposal 47

SECTION 140 - Non-Potable Water Facilities 48

140-1.02B Polyvinylchloride (PVC) Pipe 48

SECTION 150 - Corrosion Control Facilities 49

150-1.0 Soil Corrosivity Investigation 49
150-1.01 General 49
150-1.02 Soil Resistivity Measurements 49
150-1.03 Soil Chemical Analysis 51
150-1.04 Laboratory Evaluation 51
150-2.0 Corrosion Control Requirements 51
150-2.01 General 51
150-2.02 New Water Mains and Extensions 51
150-2.03 Test Station Spacing 52
150-2.04 Copper Service Laterals 52
150-2.05 Non-Metallic Pipe with Metallic Fittings and Valves 52
150-3.0 Design 54
150-3.01 Cathodic Protection System Design 54
150-4.0 Materials 55
150-4.01 General 55
150-4.02 Joint Bond Wires 55
150-4.03 Galvanic Anodes 55
150-4.04 Cathodic Protection Test Station 57

150-4.05 Test Station Wire 57
150-4.06 Permanent Reference Electrodes 57
150-4.07 Shunts 57
150-4.08 Thermite Weld Materials 57
150-4.09 Grounp Clamp 58
150-4.10 Thermite Weld Caps 58
150-4.11Wire Connectors 58
150-4.12 Insulated Joints 58
150-4.13 Casing Insulator 58
150-4.14 Casing Seals 58
150-4.15 Wall Seals 58
150-4.16 Pipe Backfill 59
150-4.17 Coatings for Buried Insulating Flanges 59
150-5.0 Installation 59
150-5.01 General 59
150-5.02 Pipe Joint Bonding 59
150-5.03 Exothermic Welds 59
150-5.04 Anode Storage and Handling 59
150-5.05 Galvanic Anode Installation 60
150-5.06 Wires 60
150-5.07 Test Station Installation 60
150-5.08 Insulating Flanged Joints 61
150-5.09 Casing Insulator and Seals 61
150-6.0 Testing 61
150-6.01 General 61
150-6.02 Electrical Continuity Testing 61
150-6.03 Insulation Joints and Casings 62
150-6.04 Test Stations 62
150-6.05 Cathodic Protection System 62
150-6.06 Acceptance 62

SECTION 160 - Fiber Optic Facilities 64

160-1.0 General 64
160-2.0 Material: 64
160-2.01 Conduit Material 64
160-2.02 Vault Material 64
160-3.0 Conduit Placement 66
160-3.01 All Conduits 66
160-3.02 Fiber Optic Trunk Line (T), Fiber Optic Main Line (M) and Distribution Conduits (C) 66
160-3.03 Service Conduits (S) 67
160-4.0 Vault Placement 67

160-4.01 Node Vaults (Vn) 67
160-4.02 Fiber Splice Vaults (Vf) 68
160-4.03 Service Vaults (Vs) 68
160-5.0 Right-of-Way 68

SECTION 170 - Street And Pavement Restoration Regulations 69

170-1.0 Moratorium 69
170-2.0 General 69
170-2.01 Permits 69
170-3.0 Excavation 70
170-4.0 Backfill 70
170-5.0 Paving 71
170-6.0 Defects 73
170-7.0 Miscellaneous 73

SECTION 200 - Irrigation And Landscape Facilities 74

200-1.0 Irrigation 74
200-1.01 General 74
200-1.01A Scope of Work 74
200-1.01B Purpose of Specifications 74
200-1.01C Improvement Plans 74
200-1.01D Damage to Property 75
200-1.01E Damage by Leaks 75
200-1.01F Inspections 75
200-1.01G Verification of Dimensions 75
200-1.01H Record Drawings 75
200-1.01I Controller Charts 76
200-1.02 Materials 76
200-1.02A Plastic Pipe 76
200-1.02B Manufacturing Guarantee 77
200-1.02C Risers 77
200-1.02D Quick Coupling Valves 77
200-1.02E Valve Boxes 77
200-1.02F Sprinkler Heads 78
200-1.02G Automatic Sprinkler Controller 78
200-1.02H Remote Control Valves 78
200-1.02I Control Wiring 79
200-1.02J Gate Valves 79
200-1.02K Check Valves 79
200-1.02L Ball Valves 79
200-1.02M Backflow Unit 79
200-1.02N Backflow Enclosure 79

200-1.03 Construction 80
200-1.03A Excavation and Backfill 80
200-1.03B General Requirements for Piping 80
200-1.03C Piping Depth 80
200-1.03D Plastic Pipes and Fittings 81
200-1.03E Check Valves and Ball Valves 82
200-1.03F Remote Control Valves 82
200-1.03G Quick Coupling Valves 82
200-1.03H Sprinkler Heads 82
200-1.03I Electric Services 82
200-1.03J Service 82
200-1.03K Controller and Control Wiring 82
200-1.03L Testing Main Lines 83
200-1.03M Testing Lateral Lines 83
200-1.03N Closing in Uninspected Work 83
200-1.03O Coverage Test for Sprinklers 83
200-1.03P Final Inspection 83
200-1.03Q Guarantee 84
200-1.03R Certification 86
200-1.04 Measurement 86
200-1.05 Payment 86
200-2.0 Landscape (Plants and Planting) 86
200-2.01 General 86
200-2.01A Scope of Work 86
200-2.01B Protection 86
200-2.01C Job Conditions 87
200-2.02 Materials 87
200-2.02A Import Soil 87
200-2.02B Amendments 88
200-2.02B.1 Organic Amendment 88
200-2.02B.2 Soil Amendment 88
200-2.02B.3 Fertilizer 89
200-2.02C Plant Material 90
200-2.02C.1 Nursery Grown and Collected Stock 91
200-2.02C.2 Seed 91
200-2.02C.3 Hydro – Mulch 92
200-2.02C.4 Hydro-seeding Additive (Binder) 92
200-2.02D Guying and Staking Materials 92
200-2.02D.1 Wood Tree Stakes 92
200-2.02D.2 Ties 92
200-2.02E Water 92
200-2.02F Mulch 92

200-2.02G Wood Headerboards 93
200-2.02H Sand 93
200-2.02I Sod 93
200-2.02J Inspection 93
200-2.02K Soil Preparation Prior to Planting 93
200-2.02L Final Grades 94
200-2.02M Disposal of Excess Soil 94
200-2.03 Planting Installation 95
200-2.03A General 95
200-2.03B Pre-Plant Weed Control 95
200-2.03C Lay-Out of Major Plantings 95
200-2.03D Planting of Trees, Shrubs and Vines 96
200-2.03E Planting of Groundcovers 97
200-2.03F Mulch 98
200-2.03G Planting of Sod 98
200-2.03H Hydro-Seeding Preparation and Operation 99
200-2.03I Clean-Up 101
200-2.03J Observation Schedule 101
200-2.04 Planting Maintenance 102
200-2.04A General Requirements 102
200-2.04B Tree and Shrub Maintenance 103
200-2.04C Turf Maintenance 103
200-2.05 Final Planting Inspection and Acceptance 104
200-2.05A Guarantee and Replacement 105
200-2.06 Measurement 105
200-2.07 Payment 105
200-3.0 Miscellaneous 105
200-3.01 Monuments 105
200-3.02 Street Barricades 105
200-3.03 Headerboards 106
200-3.04 Bollards 106

TABLE OF CONTENTS

STANDARD PLANS

DESCRIPTION **PAGE NO.**

CATHODIC PROTECTION (CP)

Corrosion Test Station (CTS) CP-1
Anode Test Station (ATS) CP-2
Casing Test Station (CATS) CP-3
Foreign Pipeline Test Station (FPTS) CP-4
Insulating Joint Test Station (IJTS) CP-5
Anode Test Station - Cross CP-6
Anode Test Station - Elbow CP-7
Anode Test Station - Fire Hydrant CP-8
Anode Test Station - Riser CP-9
Anode Test Station - Valve CP-10
Anode Test Station - Valve and Tee CP-11
Anode Test Station - Lateral CP-12
Test Station CP-13
Dielectric Insulating Joint CP-14
Cable Identification CP-15
Exothermic Weld Process CP-16
Wenner Four Pin Resistivity Test CP-17

GRADING (G)

Exterior Perimeter Property Line Grading G-1
Interior Property Line Grading G-2
Masonry Retaining Wall (Type A) G-3a
Masonry Retaining Wall (Type B) G-3b
Reinforced Concrete Retaining Wall G-4a
Reinforced Concrete Retaining Wall Notes G-4b

IRRIGATION (I)

Irrigation Equipment List I-1
Irrigation System Trenching I-2
Tunneling I-3
Irrigation System Thrust Blocking I-4
Backflow Preventer Enclosure I-5
RainMaster DX2 Irrigation Controller I-6a
RainMaster DX2 Irrigation Controller Enclosure Top Opening I-6b

{Blank}.....I-7
Master Valve and Flow Sensor I-8
CCU or Field Satellite Grounding Grid.....I-9
Flow Sensor Wire Splice.....I-10
Irrigation Valve Box Installation.....I-11
3M-DBY Wire Connection.....I-12
Pressure Regulator I-13
Remote Control Valve.....I-14
Quick Coupling Valve I-15
Rotary Pop-Up Head.....I-16
Tree Bubbler and Spray Pop-Up Head I-17
Tree Bubbler-Plan View I-18
Flush Valve.....I-19
{Blank}.....I-20
Electric Meter Pedestal I-21
{Blank}.....I-22
Non-Potable Water Signage I-23

LANDSCAPE (L)

Tree Planting..... L-1
Shrub/Ground Cover Spacing L-2
Root Barrier Detail..... L-3
Shrub Planting Details..... L-4
Headerboard on Planting Areas..... L-5
Cobble Stone Paving..... L-6
Asphaltic Concrete Walk Detail..... L-7
Bike Trail Paving Detail..... L-8
Concrete Mowing Strip..... L-9
Typical Tree Guying for 24” Box..... L-10
{Blank}..... L-11
Removable Metal Bollard L-12
Collapsible Metal Bollard Details (1).....L-12a
Collapsible Metal Bollard Details (2)..... L-12b
Stainless Steel Drinking Fountain L-13
Drain Sump..... L-14
Turf Cell L-15
Enhanced Wood Fence..... L-16
Park Dispenser L-17
City Entry Monument..... L-18
Park Identification Sign - I L-19
Park Identification Sign - II..... L-20
Chain Link Fence.....L-21a

Chain Link Fence Notes L-21b
Two Rail Concrete Fence L-22a
Standard Bike Rack L-23
Poured In Place Safety Surfacing L-24
Landscape Berm Detail L-25
Pedestrian Traffic Loading Bicycle-Proof Drop Inlet Details L-26a
Pedestrian Traffic Loading Bicycle-Proof Drop Inlet Table L-26b
Pedestrian Traffic Loading Bicycle-Proof Grate Locking Details for Inlets L-26c
Pedestrian Traffic Loading Bicycle-Proof Grate Bolt Detail L-26d
Pedestrian Traffic Loading Bicycle-Proof Frame & Grate Details L-26e
Pedestrian Traffic Loading Bicycle-Proof Frame Table L-26f
Pedestrian Traffic Loading Bicycle-Proof Grate Table L-26g
Drain Box 10-3/8” I.D. x 12” L-27

STORM DRAIN (SD)

Small Diameter Storm Drain Manhole SD-1
Large Diameter Storm Drain Manhole SD-2
Extra Large Diameter Storm Drain Manhole SD-3
Subsurface Drain at Inlet Structure SD-4
Reinforced Concrete Collar SD-5a
Reinforced Concrete Collar Notes SD-5b
Benching for Compacted Fill SD-6
Concrete Pipe Slope Anchor SD-7
Local Depression SD-8
Steep Slope Erosion Protection Certified Compaction SD-9a
Steep Slope Erosion Protection with Soil Cement Backfill SD-9b
Transition Structure - Detail 1 ..... SD-10a
Transition Structure - Detail 2 ..... SD-10b
Transition Structure - Detail 3 ..... SD-10c
Transition Structure - Table SD-10d
Transition Structure - Notes SD-10e
Protection Bar Detail SD-11a
Protection Bar Notes SD-11b
Temporary Corrugated Metal Pipe Riser Type A SD-12
Temporary Corrugated Metal Pipe Riser Type B SD-13
Temporary Corrugated Metal Pipe Riser Type C SD-14
Type “A” Inlet - Details SD-15a
Type ‘A” Inlet - Sections SD-15b
Type “A” Inlet - Notes SD-15c
Type “C” Inlet - Details SD-16a
Type “C” Inlet - Section and Notes SD-16b

Type “A” Inlet Alternate I SD-17a
Type “A” Inlet Alternate I - Notes and Sections SD-17b
Type “A” Inlet Alternate II SD-18a
Type “A” Inlet Alternate II - Notes SD-18b

STREET LIGHT (SL)

Street Light Foundation SL-1
Standard Street Light SL-2
Residential Decorative Street Light SL-3
Alternate Residential Decorative Street Light SL-4
Commercial/Industrial Decorative Street Light SL-5
Arterial Street Light SL-6
{Blank} SL-7
Bollard Light SL-8

SANITARY SEWER (SS)

Standard Sewer Service SS-1
Sanitary Sewer Manhole SS-2
Large Sanitary Sewer Manhole SS-3
Sanitary Terminal Manhole Base SS-4
Utility Crossing SS-5
Grease Interceptor Details SS-6a
Grease Interceptor Notes SS-6b
Sewer Backflow Relief Devices SS-7

STREETS (ST)

Arterial Street ST-1
Collector Street ST-2
Industrial/Commercial Street ST-3
Residential Collector Street ST-4
Residential Local Street ST-5
Cul-de-Sac ST-6
Residential Driveway with Adjacent Sidewalk ST-7a
Residential Driveway with Separated Sidewalk ST-7b
Industrial/Commercial Driveway ST-8
90-degree Intersection Elbow ST-9
Sight Distance Requirements ST-10
Visibility Requirements (1) ST-11
Visibility Requirements (2) ST-11a
Street Name Sign ST-12
Roadside Breakaway Sign Post ST-13
Bus Turnouts ST-14

Typical 60-Degree Parking Stall Layout ST-15a
Typical 45-Degree Parking Stall Layout ST-15b
Typical 90-Degree Parking Stall Layout ST-15c
Typical Angled Compact Parking Stall Layout ST-15d
Street Barricade..... ST-16
Concrete Walkway Detail ST-17
Mailbox Location..... ST-18
Iron Fence and Gate ST-19a
Open-ended Cul-de-Sac Fence and Wall..... ST-19b
Speed Table Crosswalk..... ST-20
Handicap Ramp Type “A” and “B”..... ST-21a
Handicap Ramp Type “C” and “D”..... ST-21b
Handicap Ramp Details..... ST-21c
Handicap Ramp Notes-1 ..... ST-21d
Handicap Ramp Notes-2 ..... ST-21e
Standard Residential Good-Neighbor Fence ST-22
Sidewalk, Curb, and Gutter..... ST-23
Subsurface Drain Below Curb and Sidewalk ST-24
Trench and Backfill Requirements..... ST-25
Open Trench, Backfill and Repair of Existing Streets..... ST-25a
Notes for Open Trench, Backfill and Repair of Existing Streets ST-25b
Boxed Survey Monument..... ST-26
Through-the-Curb Drain ST-27
Crosswalk Striping on Arterial Streets ST-28
Raised Median Nose Location ST-29
Traffic Sign Placement..... ST-30
Left-Turn Only Median Opening ST-31
Median Taper..... ST-32
Median Flare..... ST-33
Solid Waste Enclosure ST-34
Solid Waste Enclosure Bolt Details..... ST-34a
Laneline Striping..... ST-35
Concave Median ST-36
Typical ‘Stop’ Intersection..... ST-37
New and Existing Pavement Joint..... ST-38
Speed Bump..... ST-39
School Crosswalk Signs..... ST-40
Pedestrian Crosswalk Signs ST-41
Standard Trench Detail Trench Cut..... ST-42a
Standard Trench Detail T-Cut..... ST-42b
Standard Trench Detail Plan View..... ST-42c
Standard Trench Detail General Notes..... ST-42d

WATER (W)

Residential Fire Hydrant Installation W-1
Industrial/Commercial Fire Hydrant Installation W-2
Fire Hydrant Break-Off Check Valve W-3
Fire Protection Assembly W-4
Standard Water Service W-5
Standard Meter Installation W-6
Water Service Notes W-6a
Large Diameter Water Service W-7
Backflow Prevention Device - Under 3” Main Line W-8
Backflow Prevention Device Assembly List W-8a
Backflow Prevention Device - 3” to 10” Main Line W-9
2” Blowoff Assembly W-10
Standard Air and Vacuum Relief Valve W-11
Air and Vacuum Relief Valve Enclosure W-11a
Water Quality Sampling Station W-12
Valve Box and Riser Installation W-13
Concrete Cap Over Watermain W-14
Thrust Block Bearing Area W-15
Bedding for Valves Up To 12” Mains W-16
Locating Wire for Plastic Mains W-17
Conductor Casing W-18
Tapping Sleeves 4” to 12” Details W-19
Tapping Sleeves 4” to 12” Table W-19a
Tapping Sleeves 14” to 24” Details W-19b
Tapping Sleeves 14” to 24” Table W-19c
Typical Cluster Water Services Manifold Layout W-20

APPENDICES

APPENDIX A

Resolution No. 97-72

APPENDIX B

Park/Median Features Inventory

APPENDIX C

Mean Turfgrass Quality Ratings of Tall Fescue Cultivars in Sunnyvale, California (2007-2011)

REVISIONS SUMMARY

Revised Date: 02/05/2016

The following Standard Plans have been added:

<u>LANDSCAPE (L)</u>

Pedestrian Traffic Loading Bicycle-Proof Drop Inlet Details L-26a
Pedestrian Traffic Loading Bicycle-Proof Drop Inlet Table..... L-26b
Pedestrian Traffic Loading Bicycle-Proof Grate Locking Details for Inlets L-26c
Pedestrian Traffic Loading Bicycle-Proof Grate Bolt Detail..... L-26d
Pedestrian Traffic Loading Bicycle-Proof Frame & Grate Details..... L-26e
Pedestrian Traffic Loading Bicycle-Proof Frame Table L-26f
Pedestrian Traffic Loading Bicycle-Proof Grate Table L-26g
Drain Box 10-3/8" I.D. x 12" L-27

<u>WATER (W)</u>

Tapping Sleeves 14" to 24" Details..... W-19b
Tapping Sleeves 14" to 24" Table..... W-19c

SECTION 1

DEFINITIONS AND TERMS

1.01 General: Whenever the following terms occur in the Standard Plans and Specifications, the meaning shall be interpreted as follows:

State of California - The City of Brentwood

Standard Specifications - Standard Specifications, State of California, Department of Transportation, July 2010 Edition

Department of Transportation - The Engineering Department of the City of Brentwood

Division of Highways - The Engineering Department of the City of Brentwood

Director - The City Engineer of the City of Brentwood

Engineer - The City Engineer of the City of Brentwood, acting, either directly or through properly authorized agents, such agents acting within the scope of the particular duties entrusted to them.

Laboratory - The Laboratory of the Engineering Department of the City of Brentwood or such other laboratory as may be authorized by the City Engineer to test materials and work.

SECTION 16

CLEARING AND GRUBBING

The following is added to Section 16 of the Standard Specifications:

16-1.01 Preservation of Property: Salvage street signs and return to the City Corporation Yard at 2201 Elkins Way.

16-1.03 Construction: Where roots of existing trees are to be pruned, the following procedure shall be followed:

1. All tools shall be clean, sharp, in proper working order and shall be checked for safety before each job.

2. All roots pruned shall be cut as smooth as possible with the least amount of surface wood exposed or at a 90° angle to the root end cut.

3. All root cuts made over one (1) inch in diameter shall be painted to seal with an approved type of tree seal paint.

4. All recommendations of the Soils or Geotechnical Report shall be adhered to unless superseded by more stringent Standard City Specification.

SECTION 19

EARTHWORK

The following is substituted in place of Section 19-5.03 and 19-5.04 of the Standard Specifications:

19-5.03B Compaction Section (95 Percent): A dry compaction of not less than 95 percent (ASTM 1557) shall be obtained for a minimum depth of 0.5 foot below the grading plane for the full width of any street, curb and gutter, and concrete flatwork.

In addition, relative compaction of not less than 95 percent shall be obtained for a minimum depth of 2.5 feet below finished grade for the width of the traveled way plus 3 feet on each side thereof, whether in excavation or in embankment.

Except for the outer 5 feet measured horizontally from the embankment side slopes, the full width of embankment within 150 feet of bridge abutments shall be compacted to a relative compaction of not less than 95 percent. The 150-foot limit of 95 percent compaction will be measured horizontally from the bridge abutment and either parallel or concentric with the roadway centerline. In addition, a relative compaction of not less than 95 percent shall be obtained for embankment under retaining wall footings without pile foundations within the limits established by inclined planes sloping 1.5:1 out and down from lines one foot outside the bottom edges of the footing.

19-5.03C Compaction (90 Percent): Ninety percent (90%) compaction shall generally be restricted to open land or landscape area to be determined by the City Engineer.

A dry compaction of not less than 90 percent (ASTM 1557) shall be obtained in all material except as specified herein to be 95 percent or as may be otherwise specified in the contract plans, or in the City of Brentwood Standard Plans.

19-8.01 Geogrid Installation: Prior to the placement of the aggregate base rock section, Contractor shall install geogrid, Tensar TX 130S or approved equal, whenever the soil 'R' value is less than ten (10), or when soil movement and/or pumping occurs during proof rolling with a full-water truck. No structural allowance will be made for the geogrid.

SECTION 26

AGGREGATE BASES

The following is added to Section 26 of the Standard Specification:

26-1.02 Materials:

1. No recycled class 11 Aggregate base will be allowed.

2. Aggregate base shall not consist of any recycled material or product such as, "Sierra-Crete" by DuPont or the like.

SECTION 39

HOT MIX ASPHALT

The following is added to Section 39 of the Standard Specification:

39-1.02 Materials:

1. All surface courses of Hot Mix Asphalt shall have 1/2" maximum medium aggregate.

2. Bottom lift of asphalt shall be ¾" maximum medium Hot Mix Asphalt.

3. Asphalt shall not exceed more than 15% Recycled Asphalt Pavement (RAP) Materials.

4. Asphalt concrete shall extend both 1/4" above and 1/4" past the lip of gutter.

The following is added to Section 39 of the Standard Specifications:

39-9.0 Deep Strength (or Deep Lift) Asphalt Concrete:

39-9.01 Description: Where deep strength is specified, it shall be placed on a previously prepared subgrade as specified in Section 39-1.09B (Subgrade) to a tolerance of 0.05 foot above or below the subgrade established by the City Engineer.

39-9.02 Grades: The final grade of the lift below the surfacing course shall not vary more than 0.05 foot above or below the planned grade for that course. The finished surface grade tolerance shall conform to Section 39-1.12 "Smoothness" of the Standard Specifications.

39-9.03 Thickness: The thickness of the traveling course shall be as specified in the approved and signed Improvement Plans or the Special Provisions, when available. All other asphalt concrete below this point is considered base course.

39-9.04 Tack Coat: Tack coat paint binder shall be a penetration type emulsion RS-l conforming to Section 94 of the Standard Specifications. Tack coating as covered in Section 39-1.09C, of the Standard Specifications will be required before placement of the surface course. Tacking between base courses is required at the rate of 0.01 to 0.03 gallons per square yard. Application in excess of 0.03 gallon per square yard will be at Contractor's expense. Placement of materials will be determined by the City Engineer.

39-9.05 General Requirements: Where deep strength sections are placed in existing streets with established gutter sections, a continuous wedge shape section of asphalt paving shall be placed against the gutter edge, held below the gutter lip by the amount of the thickness of the surface course and feathered to subgrade in a width of not less than three feet before placement of the level courses, unless otherwise permitted by the City Engineer.

Upon completion of all portions of the construction, the surface course shall be placed for the entire length of the project to provide a smooth uniform riding surface with a minimum of transverse joints.

Side street construction shall have a section varying from a uniform cross-slope at ends of curb return to variable or parabolic section as required to match the existing street section. Transition shall be smooth and uniform between the points described above.

39-9.06 Material: Asphalt concrete shall be Type A on arterial and collector streets, Type B on residential streets and all other paving surfaces not specified, and shall conform to the provisions of Section 39 of the Standard Specifications.

The viscosity grade of paving asphalt shall be AR-4000; aggregate shall be three fourths (3/4) inch maximum, medium grading. The amount of asphalt to be used by weight shall be determined by California Test Method 367.

39-9.07 Spreading and Compacting: The maximum compacted thickness of any one base course of asphalt concrete shall be three (3) inches, the maximum compacted thickness of the surface course of asphalt concrete shall be (2) inches and the minimum thickness shall be one (1) inch. Minimum compacted base course shall be two (2) inches. Minimum thickness of asphalt concrete shall be four (4) inches. Seam shall be overlaid 1-½" and shall only be located on centerlines.

An automatic self-propelled paving machine shall be required for spreading the surface course and any leveling courses required.

In lieu of the conflicting provisions of Section 39-3 of the Standard Specifications, asphalt concrete base courses may be spread and compacted by such mechanical means as will provide a surfacing of uniform smoothness and textured in such a manner as to prevent segregation of materials.

Rolling of the deep lift base courses shall be from the center of the paving pass to the edge.

The Contractor shall use either a 10-ton steel wheel tandem roller or a 15-ton pneumatic tired roller.

Tire pressure of the pneumatic tired roller at the time of breakdown rolling shall be 90 psi unless a lesser tire pressure is permitted by the City Engineer. It is suggested that the pneumatic tire roller have twenty (20) inch rims to help prevent boiling down.

The pneumatic tired roller shall be used to break down the spread on asphalt concrete base and shall operate immediately behind the paver or spreader.

All mixtures shall be spread at a temperature of not less than 250°F. Base material compaction shall be completed before the mix reaches 200°F. There shall be a minimum of twelve (12) hours elapsed time between the placing of successive course in any area.

Roller tires shall be preheated and operated hot and dry or have proper spray equipment for use of Roller-Ease to prevent pick up of hot mix.

Rolling shall continue until ruts are eliminated and the proper degree of compaction is achieved. Final rolling of the surface course shall be accomplished with a steel wheel tandem roller.

39-9.08 Testing:

1. The compacted density of each layer of asphalt concrete placed will be tested. Minimum field compaction shall be 95% of maximum laboratory density based upon California Test Method 304. The Contractor shall furnish a certified copy of the above test prior to placing asphalt concrete for the asphalt concrete mix to be used on project along with plotted stability curve with at least one point plot each side of figure established by California Test Method 304. The City Engineer may adjust percent of asphalt based upon curve submitted.

2. The Developer or Contractor pays for the testing performed by the City. Compaction tests shall be made on the asphalt base and surface course while the asphalt concrete is still hot enough to allow compaction to the required densities. All associated costs related to a test failure shall be borne by the Contractor.

3. The Contractor shall be responsible for requesting testing with a minimum notice of 24 hours.

SECTION 75

MISCELLANEOUS METAL

The following is added to section 75-1.02 of the Standard Specifications:

75-1.02B Manhole Frames, Grates and Covers: Gray iron castings shall conform to and/or exceed the requirements stated in the miscellaneous Iron and Steel Materials Table. Current certified test reports shall be furnished with units furnished.

In addition, current certified test reports for testing in accordance with AASHO H-20 loadings shall be furnished.

Units furnished must be identifiable with reference to the above tests.

Machined surface tolerances shall produce true, uniform bearing surfaces.

All frames and lids shall be interchangeable with like seat design and dimensional fit tolerances shall not exceed those allowed on designated specified units detailed on the Standard Plans.

Manhole frame and covers and catch basin frames and covers shall be galvanized.

75-1.02BB Identifying Castings: All gray iron castings shall be marked on the top surface with the manufacturer's name, initials or logotype. Such marking shall be made by means of stamping, cast-in-mold lettering, etching, or engraving. In addition, the manhole cover shall have the “City of Brentwood” labeled on it as well as the facility (i.e. storm drain, sewer, water, etc.). All materials shall be made in U.S.A.

SECTION 81

MONUMENTS

This section supersedes in its entirety the like numbered section of the Standard Specification:

81-1.01 General: This work shall consist of constructing cast-in-place Portland cement concrete survey monuments at the location shown on the plans or directed by the City Engineer and as specified in these Specifications.

81-1.02 Materials: The concrete portion of monuments shall be constructed in accordance with the provisions in Standard Specifications Section 51, "Concrete Structures", and Section 90, “Concrete".

Concrete shall be Class B or minor concrete at the option of the Contractor. A one-inch maximum aggregate shall be used.

All concrete shall be thoroughly compacted and shall be cured in accordance with the provisions in Section 90-1.03B “Curing Concrete”.

At the option of the Contractor, the frame and cover for Type D survey monuments shall be fabricated from either cast steel or gray cast iron. The covers shall fit into the frames without rocking.

The cast steel and gray cast iron frames and covers shall conform to the provisions in Standard Specifications Section 55-1.02, “Materials”.

Granular material for Type D survey monuments shall be gravel, crushed gravel, crushed rock, or any combination thereof. Granular material shall not exceed 3/4 inches in greatest dimension.

81-1.03 Construction: Survey monuments may be cast-in-place in neat holes without the use of forms, except where forms are shown on the plans.

Survey marker disks shall be placed in survey monuments before the concrete has acquired its initial set and shall be firmly bedded in the concrete. The concrete monument shall be so located that when the disk is placed in the center of the monument, the point being referenced will fall within a one-inch circle in the center of the disk.

After the monuments have been constructed as specified, any space around them shall be filled with earth, free from rock, or with base and surfacing materials. Earth material shall be watered and tamped into place.

Surplus excavated material remaining after the monuments have been constructed shall be disposed of.

SECTION 86

ELECTRICAL SYSTEMS

The following specification shall be added to this section of the Standard Specification:

86-1.01 Summary: The work described in this section shall be done in accordance with Section 86 of the latest edition of the State Standard Specifications, the latest edition of the State Standard Plans, the City Standard Plans, and the Improvement Plans.

In case of conflict between any of the contract documents, the document, which takes precedence over, and shall be used in lieu of such conflicting portions, shall be as specified in the City Standard Specifications.

86-1.07 Scheduling of Work: The initial installation and turn-on of the new or modified equipment shall not be made on a Monday, Friday, or the day preceding a Legal Holiday. Immediately prior to turning on the signals, Construction Type III Barricades with a sign "Signal Ahead," and a portable flashing yellow warning light shall be placed on all approaches to the intersection. These barricades shall remain in place for a minimum of two days.

Present at the time of the turn-on shall be a representative from the electrical contractor, controller manufacturer, City of Brentwood Engineering Staff and the design engineer.

In the event that the Contractor is unable to respond to a problem that develops during the functional test, or that for any reason is unable to correct the problem in a timely fashion as determined by the City, the City may have its own maintenance personnel work on the problem. Any such work performed by the City shall not invalidate the guarantee provided for in these Specifications, and shall be at the Contractor's expense.

86-2.01 Excavating and Backfilling: All backfill within the roadway area and adjacent to signal foundations shall conform to City of Brentwood Standard Plan ST-25, ST-25a and ST-25b.

86-2.03 Foundations: Exterior dimensions and bolt pattern for the Controller cabinet foundation shall be as recommended by the cabinet manufacturer. An 8-foot ground rod shall be installed in the foundation.

86-2.04 Standards, Poles, Steel Pedestals and Posts: Section 86-2.04, "Standards, Poles, Steel Pedestals and Posts," of the Standard Specifications is amended by adding the following:

All galvanized nuts used on assemblies with a specified preload or torque, shall be lubricated in accordance with the requirements specified for galvanized Grade DH nuts in ASTM Designation: A563.

86-2.05 Conduit: Conduit installed in non-pavement areas shall be covered with plastic underground warning tape 6 inches above the conduit. Conduit installed to a Pacific Gas and Electric (PG&E) service pole shall extend up the pole 1 foot and be temporarily capped. PG&E will extend the conduit up the pole to the actual service point.

The ends of conduits in pull boxes shall be a minimum of 4 inches above surface of rock and a minimum of 6 inches below the top of the pull box.

86-2.06 Pull Boxes: All pull boxes shall be of quartzite construction and shall be gray in color. Pull box lids shall have a non-skid surface with the words "Traffic Signal," Street Lighting" or "Service" on the lid, as appropriate.

On long runs, the spacing of pull boxes shall not exceed 200 feet measured along the conduit. No drain hole or grout shall be placed in sump area.

86-2.08 Conductors and Cables: Each new conductor shall be installed with 3 feet of slack in each signal or lighting standard and 6 feet of slack in each pull box.

All low voltage conductors (less than 50 volts) shall be spliced by methods shown on State Standard Plan ES-13, with the addition that splices shall be soldered using 60-40 non-acid core solder. Splices shall be insulated by Method "B" as shown on State Standard Plan ES-13.

Conductors shall not be spliced in the pull boxes nearest the controller, but shall be continued to terminals in the cabinet.

86-2.09F Fused Splice Connectors: The fused splice connector to each luminaire shall be installed in the base of the electrolier pole next to the handhole area. Fused splice connectors shall NOT be placed in the pullboxes.

86-2.11 Service: The Contractor shall coordinate with the Pacific Gas and Electric (PG&E) Company for any necessary service modification. Any fees and costs required by the utility company shall be borne by the contractor.

The service cabinet shall be a Type III-AF, Tesco Model No. 26-100 or equivalent as approved by the City Engineer. Service shall have a 100-ampere, 2P, main circuit breaker with a 50-ampere, 1P, signal circuit breaker, a 30-ampere, 1P, lighting circuit breaker, a 15-ampere, 1P, illuminated street name sign circuit breaker, a 30-ampere, 1P, "spare" circuit breaker. A 30-ampere, 125 volt twist lock receptacle shall be mounted in the dead-front panel for the convenience receptacle.

Traffic signals, illuminated street name signs, convenience receptacle, and "spare" shall be metered; street lighting shall be un-metered.

86-2.14 Testing: Prior to field installation the contractor, or manufacturer, shall deliver to the County for testing, the traffic signal controller assembly, (wired cabinet, controller, and all auxiliary control equipment).

The County will test the controller assembly for continuous, satisfactory operation (without failure) for 21 consecutive calendar days.

When the controller assembly has been satisfactorily shop tested, the City Traffic Engineer will so notify the Contractor by telephone, with a follow-up in writing, of the scheduled pick up date.

All testing shall be paid for by the contractor.

86-2.16 Painting: Controller and service cabinet exteriors shall not be painted.

86-3.01 to 86-3.04 Controller Assemblies: The contractor shall supply a Naztec 981 NEMA TS-2 controller in a completely wired Type P cabinet assembly with inductive loop detector sensor units, and anchor bolts. Except as modified below, it shall conform to the latest State of California "Traffic Signal Control Equipment" Specifications with the Caltrans District 4 addenda.

1. The monitoring device shall meet the Caltrans Model 210-P standard with the addition that it shall also trip and indicate the failure mode under the following conditions:

    a. When all signal heads for any phase are dark.

    b. When there is a load switch failure.

    c. When there is a power interrupt after failure.

    d. When the program card is ajar.

2. The load switches shall meet the Caltrans Model 200 standard with the addition that upon conflict, they shall latch-in the last display.

3. Conductors within cabinets shall be cabled together with self-clinching nylon cable ties. All connectors for cabinet equipment shall have wires installed on all pins. Spare or unused wires shall be long enough to reach the farthest terminal on the termination panel, with 2 inches to spare. All unused ends shall be identified, insulated and folded back in a wire bundle.

4. A convenience receptacle shall be installed and have ground-fault circuit interruption as defined by the National Electrical Code. Circuit interruption shall occur on 6 milliamperes of ground-fault current and shall not occur on less than 4 milliamperes on ground-fault current.

86-3.05A Pre-emption Equipment: The Contractor shall install "3-M" Brand "Opticom" or approved equal, optical detectors, cables complete and operable, as shown on the plans and according to the manufacturer's recommendations and the latest adopted version of the East Diablo Fire Protection District "Specifications for Emergency Vehicle Controls on Traffic Signals."

The Engineer will mark the optical detector location for the contractor. The contractor shall notify the Engineer at least 24 hours prior to installing the optical detector.

Mounting of the optical detector on a ¾-inch diameter conduit stub shall conform to the following:

1. Signal Mast Arm - Install by drill and tap method or Pelco Bracket AB-132-29 with 1½-inch to ¾-inch reducer.

2. Type 1 Standards - If necessary, retrofit signal framework and hardware.

3. Optical cables shall be labeled in the controller cabinet and in the pull boxes adjacent to the signal standards with appropriate phase designations.

4. Cable shall be 3M, Model #138, Clifford 3C20T70S8, or approved equal, and shall be installed with a minimum of 4 feet and a maximum of 6 feet of slack in controller cabinet and pull boxes. The cable shall not be spliced.

5. One "3-M" brand, or approved equal, high priority emitter shall be provided by the Contractor, complete with control switch, cable and mounting hardware, to the City Engineer.

6. The City and/or the East Diablo Fire Protection District (EDFPD) will test the optical detection system. Test will be performed from a distance of between 300 feet and 1,800 feet between the emitter and the detector being tested.

86-3.05B Solid State Switching Devices: Load switches shall monitor, with LED's, both input from the controller and output to the field conductors. Upon conflict, the load switch shall latch in the last display.

86-3.05C Flash Transfer Relay: Sleeves of the appropriate color, red or yellow, shall be installed on the flash bus wire.

86-4.01 Vehicle Signal Faces: Until ready for use, new or relocated signal faces shall be securely covered so that no signal indications are visible. A flash hole no larger than 1-inch diameter may be placed in front of each lens.

All new vehicle signal faces shall utilize 12-inch lenses. New left turn signal faces shall be composed of sections with arrow lenses.

86-4.03 Pedestrian Signal Faces: All pedestrian signal faces shall be modular solid state with international symbol indications and shall utilize Z-crate type front screens. Pedestrian signals shall be Type "C."

86-5.01 Vehicle Detectors: Six-foot diameter circular Type E loops shall be installed as per Standard Plan ES-5B and shall conform to the following:

1. The circular loop shall be sawcut. The sides of the slot shall be vertical. The minimum radius of the slot entering and leaving the circular part of the loop shall be 1-½ inches. The slot width shall be a maximum of ¼-inch, or as approved by the City Engineer.

2. Loop wire shall be Type 2. Lead-in cable shall be Type "C." Curb terminations shall be per ES-5E, Curb Termination Details, utilizing a Type "A" detector handhole.

3. Installation of new detector loops installed in pavement constructed under this project shall be completed prior to the installation of the final lift of AC pavement.

86-6.01 High Pressure Sodium Luminaires: Luminaires shall be per Standard Plan SL-2 or equal.

Luminaires shall contain a locking type mounting receptacle in accordance with EEI-NEMA standards for photoelectric control. The receptacle shall be pre-wired to the terminal board and mounted by a spring-loaded retainer ring allowing orientation without the use of tools.

Luminaire shall consist of a precision die-cast aluminum housing, glove ring, and access door.

86-6.01A High Pressure Sodium Lamp Ballasts: Ballasts shall be reactor type.

86-6.01B High Pressure Sodium Lamps: Lamps shall be 250w high-pressure sodium, with initial lumens of 27,500, a minimum rated life of 24,000 hours, and suitable for use on 120v AC circuit.

86-6.09 Internally Illuminate Street Name Signs: Internally illuminated street name signs shall be Type A with an integral Type IV photoelectric control.

86-6.11 Photoelectric Controls: Type IV shall be used unless otherwise indicated.

Technical Assistance and Back-Up Services

The manufacturer's representative shall provide the City with a California telephone number for the ordering of replacement parts that are required and for providing technical advice to City personnel.

The manufacturer shall have on hand at this number a complete file of the City's equipment, including all pertinent serial numbers.

The manufacturer shall have available at the telephone number a person with competence in parts, nomenclature and functional characteristics of the City's signal controller equipment. This person shall be able to provide descriptions, part numbers, prices and availability of the City's requirements.

A fully qualified electronics technician with a capacity to expertly advise on all matters relating to the City's equipment shall be available immediately, or by return telephone call within 24 hours (normal work days only, holidays and weekends accepted).

There shall be no charge to the City for any advice or information provided in this manner.

SECTION 90

CONCRETE

The following is added to Section 90 of the Standard Specifications:

90-1.01 General: On reconstruction and removal projects, of less than five (5) linear feet of sidewalk, match existing score pattern. If more than five (5) linear feet use new score pattern.

90-1.01C(4) Admixtures: For all concrete work, excluding sound walls and retaining walls, fibrous concrete reinforcement shall be added unless otherwise directed by the City Engineer. The reinforcement shall be 100 percent virgin polypropylene, fibrillated fibers containing no reprocessed olefin materials and specifically manufactured for use as concrete secondary reinforcement. Volume per cubic yard shall equal a minimum of 0.1% (1.5 pounds). Fiber manufacturer must document evidence of 5-year satisfactory performance history, compliance with applicable building codes and ASTM C-1116 Type III 4.1.3 and ASTM C-1116 (Ref: ASTM C-1018) Performance Level II outlined in Section 21 Note 17.

SECTION 110

STORM DRAIN FACILITIES

110-1.01 Description: This work shall consist of installing storm drain pipe and constructing storm drain structures as shown on the plans, in accordance with these Standard Specifications, and as directed by the City Engineer.

The type of storm drain pipe and storm drain structures will be designated in the improvement plans.

110-1.01A Right of Way: All publicly owned and maintained storm drains shall meet the more restrictive of the following criteria:

1. Minimum width of any easement shall be 15 feet for one (1) utility, with greater widths required for multiple utilities.

2. All easements shall have a minimum width in feet to the required trench width according to the standard detail for trench backfill, plus two (2) additional of width for every foot of depth of the pipe as measured from the bottom of the pipe to finished grade. All pipes shall be centered within their easements.

110-1.02 Materials: Pipe, fittings, miscellaneous materials and the most common joint materials are described in this Section.

1. The pipe materials, which may be used for storm drainage improvements within the City right-of-way and easements, shall be Class III as specified in Sections 63 and 65 of the Caltrans Standard Specifications. Under no circumstances shall storm drain (top of bell) encroach into subgrade material. Cover less than two (2') feet requires concrete cap and City Engineer's approval. CMP, CAP, PVC, and ABS shall not be used.

2. Contractor may elect to use cast-in-place pipe for storm drain lines 36" or greater.

110-1.02A Reinforced Concrete Pipe: Reinforced Concrete Pipe shall conform to ASTM Designation: C-76 for the size and classes indicated on the plans.

110-1.03 Excavation and Backfill: Excavation and backfill shall conform to the provisions of City of Brentwood Standard Plans ST-25, ST-25a and ST-25b.

The pipe shall be laid in a trench excavated to the line and grade shown on the approved plans. The bottom of the trench shall be graded and prepared to provide a firm and uniform bearing surface for the entire length of the pipe barrel.

Suitable excavation shall be made to receive the bell of the pipe and the joint shall not bear upon the bottom of the trench. All adjustment to line and grade shall be made by scraping away or filling in with Class II A.B. material under the body of the pipe, and not by wedging or blocking.

The use of recycled A.B. material shall not be allowed.

Trenches shall not be left open farther than 100 feet in advance of pipe laying operations or 100 feet to the rear thereof, unless otherwise permitted by the City Engineer. All trenches are to remain open until inspected and approved by the City Engineer.

The excavation shall be supported so that it will be safe and that the ground alongside the excavation will not slide or settle and all existing improvements, either on public or private property, will be fully protected from damage.

Backfill around manholes shall be Class II A.B. and shall be compacted to a minimum of 95%. In case of difficulty, a two-sack cement slurry may be used around the manholes as backfill.

All supports shall be removed after construction is completed, unless otherwise directed by the City Engineer and shall be withdrawn in a manner that will prevent the caving of the sides of the excavation. All openings caused by the removal of supports shall be filled with suitable material and properly compacted.

110-1.04 Bedding and Initial Backfill: Bedding shall be defined as that material supporting, surrounding and extending to one foot above the top of the pipe. Where it becomes necessary to remove boulders or other interfering objects at subgrade for bedding, any void below such subgrade shall be filled with the bedding material designated in the Standard Plans and Specification.

If soft, spongy, unstable, or other similar material is encountered upon which the bedding material or pipe is to be placed, this unsuitable material shall be removed to the depth approved by the City Engineer and replaced with bedding material suitably densified.

Bedding material shall first be placed so that the pipe is supported for the full length of the barrel with full bearing on the bottom segment of the pipe equal to a minimum of

0.13 times the outside diameter of the barrel or 4" minimum whichever is greater. Densification of bedding for pipe shall be accomplished after the sheeting or shoring has been removed from the bedding zone. Alternate methods of pipe laying recommended by the pipe manufacturer may be used if approved by the City Engineer.

Bedding material shall be Class II A.B. Pea gravel is not acceptable. No aggregate shall exceed 3/4".

110-1.05 Pipe Laying: Pipe shall be protected during handling against impact shocks and free fall. Pipe will be carefully inspected in the field before and after laying. If any damage is discovered in a pipe after it has been laid, it shall be subject to rejection. Any corrective work shall be approved by the City Engineer and shall be at no cost to the City.

When connections are to be made to any existing pipe, conduit, or other appurtenances, of which the actual elevation or position cannot be determined without excavation, the Contractor shall excavate for, and expose, the existing improvement before laying any pipe or conduit at no cost to the City. City of Brentwood inspection shall be prior to the connection. When the new facilities interfere with the existing flow of sewage, the Contractor shall provide satisfactory bypass facilities at his expense.

The pipe shall be laid without break upgrade from structure to structure, with bell end upgrade.

All joints shall be cleaned and then sealed with the type of materials approved by the City. The material shall be recommended by the pipe manufacturer for the purpose intended and approved by the City Engineer, in order to obtain a watertight joint against leakage and infiltration under all conditions of expansion, contraction, and settlement.

Whenever the work ceases for any reason, the end of the pipe shall be securely closed with a tight fitting plug or cover.

Whenever existing pipes are to be cut or abandoned, the open ends of said pipes shall be securely closed by a tight fitting plug or wall of concrete not less than 2 feet thick, or by a tight brick wall no less than 8 inches thick with cement mortar joints.

Where groundwater occurs, the bottom of the trench shall be kept entirely free of water during the pipe laying, filling the joints, and as long thereafter as approved by the City Engineer.

Stoppers for pipes and branches left unconnected shall be constructed of a double brick and mortar bulkhead.

Concrete pipe with elliptical reinforcement shall be laid with the minor axis of the reinforcement cage in a vertical position.

Pipe shall be laid true to line and grade. Any pipe that is not in true alignment or shows any undue settlement after laying shall be taken up and re-laid at the Contractor's expense.

Pipe sections shall be laid and joined in such a manner that the offset of the inside of the pipe at any joint will be held to a minimum at the invert. The maximum offset at the invert of pipe shall be 1 percent of the inside diameter of the pipe or 3/8-inch (9.5 mm), whichever is smaller.

In joining bell and spigot pipe, the spigot of each pipe shall be so seated in the bell of the adjacent pipe as to give a maximum of 3/8-inch (9.5 mm) annular space all around the pipe in the bell. Unavoidable offsets shall be distributed around the circumference of the pipe in such a manner that the minimum offset occurs at the invert.

When pipe is laid in a sheeted trench, all sheeting against which concrete cradle is to be placed shall be faced with at least one thickness of building paper and the sheeting shall be withdrawn without displacing or damaging the cradle.

After the joints have been made, the pipe shall not be disturbed in any manner.

110-1.06 Pipe Joints: Joints shall be watertight and flexible. Each joint shall contain a solid gasket of rubber or other material approved by the Engineer, which shall be the sole element responsible for water-tightness of the joint. This gasket shall be of circular cross section unless otherwise approved by the City Engineer. The length and cross sectional diameter of the gasket, the annular space provided for the gasket, and all other joint details shall be such as to produce a watertight joint. The slope of the longitudinal gasket contact surfaces of the joint with respect to the longitudinal axis of the pipe shall not exceed 2 degrees.

Under ordinary laying conditions, the work shall be scheduled so that the bell end of the pipe faces in the direction of laying. Prior to placing the spigot into the bell of the pipe previously laid, the spigot groove, the gasket and the inside of the bell shall be thoroughly cleaned. Then the spigot groove, the gasket and the first 2 inches (50.8 mm) of the inside surface of the bell shall be lubricated with a soft vegetable soap compound.

The gasket shall be uniformly stretched when placing it on the spigot so that the gasket is distributed evenly around the circumference. The gasket shall be lubricated as per manufacturer's recommendations.

For pipe in which the inside joints are to be pointed, suitable spacers shall be placed against the inside shoulder of the bell to provide the proper space between abutting ends of the pipe.

After the joint is assembled, a thin metal feeler gage shall be inserted between the bell and the spigot and the position of the gasket checked around the complete circumference of the pipe. If the gasket is not in the proper position, the pipe shall be withdrawn, the gasket checked to see that it is not cut or damaged, the pipe re-laid, and the gasket position again checked.

110-1.07 Existing Manholes: Existing manholes shall be adjusted to grade, removed and replaced, repaired or abandoned as shown on the plans and in accordance with the provisions of Section 15 of the Standard Specifications, "Existing Highway Facilities."

When designated on the plans, or directed by the City Engineer, existing manhole frames and covers shall be reset on new structures. Upon completion of the adjustment of existing manholes to grade, the manhole cover shall conform to the planed surface as specified for the finished hot mix asphalt surface, Section 39 of the Standard Specifications.

Unless otherwise specified on the plans, all existing manholes, catch basins, drain inlets, and other appurtenances that are removed become the property of the City of Brentwood and shall be delivered to the City Corporation Yard.

110-1.08 Storm Drain Structures: New manholes for storm drain shall be constructed in accordance with the details shown on the Standard Plans, as specified in this Section and as directed by the City Engineer.

Precast manholes shall conform to City of Brentwood Standard Plans SD-1, SD-2 and SD-3, and as shown on the plans as well as to the applicable sections in Section 70 of the Standard Specifications, "Miscellaneous Drainage Facilities" except for measurement and payment.

Manhole frames shall be secured to the manhole structure or riser barrels with full mortar bed or full circle concrete collar that will effectively secure the frame to the manhole structure and provide a uniform bearing for the frame.

Concrete for storm drain structures shall be Class A as described in Section 90 unless otherwise shown on the plans.

When the manhole is located in the pavement area, it shall not be constructed to final grade until pavement has been completed.

The inside bottoms of existing manholes, where new connections are made, and of new manholes shall be shaped to provide "flow-through" channels conforming to the size and shape of the lower portion of the inlets and outlets of the manholes. The channels shall vary uniformly in size and shape from inlet to outlet.

No pipe shall project into a manhole and in no case shall the bell of a pipe be built into the wall of a manhole or structure.

All concrete shall be cured for a period of not less than 7 days after being placed and shall be protected in place from damage.

110-1.09 Trench Resurfacing: Trenches in existing streets, except streets which are to be closed or abandoned, shall be resurfaced with the type and thickness of bases, surfacing or pavement shown on the plans or designated by the City Engineer. Unless otherwise specified, trench resurfacing shall be accomplished in accordance with the Standard Plans ST-25a and ST-25b.

Upon notice from the City Engineer, the Contractor shall proceed immediately to resurface any part of any excavation, without waiting for completion of the full length of the sewer.

All trenches shall be backfilled, patched with a minimum of 3" of cutback, and rolled to provide a smooth transition between the temporary and existing pavement at the end of each working day. Any temporary trench patching shall be subject to the approval of the City Engineer. Using tires of heavy equipment to roll the temporary paving is not considered acceptable.

110-1.10 Testing: Visual and TV testing of pipeline and manholes is required as specified by site inspector. All joints and manholes shall be constructed and tested per manufacturer's recommendations.

SECTION 120

SEWER FACILITIES

This section supersedes in its entirety the like numbered section of the Standard Specification:

120-1.01 Description: This work shall consist of laying sewer pipe and constructing sewer structures as shown on the plans, in accordance with these Specifications, the Special Provisions and as directed by the City Engineer.

The type of sewer pipe and sewer structures will be designated in the improvement plans.

120-1.01A Right of Way: All publicly owned and maintained sanitary sewers shall meet the more restrictive of the following criteria:

1. Minimum width of any easement shall be 15 feet for one (1) utility, with greater widths required for multiple utilities.

2. All easements shall have a minimum width in feet to the required trench width according to the standard detail for trench backfill, plus two (2) additional of width for every foot of depth of the pipe as measured from the bottom of the pipe to finished grade. All pipes shall be centered within their easements.

120-1.02 Materials: Pipe, fittings, miscellaneous materials and the most common joint materials are described in this Section.

Portland cement used in the production of concrete products set forth in this Section 120-1.02 shall be Type II Modified cement conforming to the provisions in Section 90 of the Standard Specifications, "Concrete."

120-1.02A Reinforced Concrete Sewer Pipe: Reinforced concrete pipe shall conform to ASTM Designation: C-76 shall no longer be in use for conveying sewer.

120-1.02B Clay Sewer Pipe: Vitrified clay pipe shall conform to the specifications for extra strength pipe of ASTM Designations: C-700 and C-301.

120-1.02C Ductile Iron Pipe: Ductile iron pipe shall comply with ANSI A21.51 (AWWA C151).

120-1.02D Polyvinylchloride (PVC) Sewer Pipe: Polyvinylchloride (PVC) sewer pipe and fittings up to fifteen inches (15”) in diameter shall conform to one of ASTM Standard Specifications D-2680, D-3034, or F-949. Solid wall pipe shall have a pipe diameter to wall thickness ratio (SDR) of 35.

Polyvinylchloride (PVC) sewer pipe and fittings from eighteen (18”) to thirty-six (36”) inches in diameter shall conform to one of ASTM Standard Specifications S679 or F949. Solid wall pipe shall have an SDR value of 35.

Joints for the Polyvinyl pipe shall be push-on bell and spigot joints using elastomeric ring gaskets. The gaskets shall be securely fixed into place in the bells so that they cannot be dislodged during joint assembly. The gaskets shall conform to ASTM Standard Specification F-477 for Elastomeric Seals (gaskets) for Joining Plastic Pipe, and shall be of a composition and texture which is resistant to common ingredients of sewage and industrial wastes, including oils and groundwater, and which will permanently endure under the conditions of the proposed use. The joints shall conform to ASTM Standard Specifications D-3212, “Joints for Drain and Sewer Pipe Using Flexible Elastomeric Seals.”

120-1.02E Resilient Joint Material: Flexible compression joints in bell and spigot clay pipe and resilient joint materials to be used therein shall conform to the requirements of ASTM Designation: C 425.

120-1.02F Rubber Gasketed Joints: Rubber gasketed joints shall conform to the provisions in Section 65-2.02E, Note 2 referring to "Rubber Gasketed Joints".

120-1.02G Reinforcement: Reinforcement shall conform to the provisions in Section 52 of the Standard Specifications, "Reinforcement".

120-1.02H Concrete: Concrete shall conform to the provisions in Section 51 of the Standard Specifications, "Concrete Structures," and Section 90 of the Standard Specifications, "Concrete".

120-1.03 Excavation and Backfill: Excavation and backfill shall conform to the provisions of City of Brentwood Standard Plan ST-25, ST-25a and ST-25b.

The pipe shall be laid in a trench excavated to the line and grade shown on the approved plans. The bottom of the trench shall be graded and prepared to provide a firm and uniform bearing surface for the entire length of the pipe barrel.

Suitable excavation shall be made to receive the bell of the pipe and the joint shall not bear upon the bottom of the trench. All adjustment to line and grade shall be made by scraping away or filling in with Class II A.B. material under the body of the pipe, and not by wedging or blocking.

The use of recycled Aggregate Base (A.B.) material shall not be allowed.

Trenches shall not be left open farther than 100 feet in advance of pipe laying operations or 100 feet to the rear thereof, unless otherwise permitted by the City Engineer. All trenches are to remain open until inspected and approved by the City Engineer.

The excavation shall be supported so that it will be safe and that the ground alongside the excavation will not slide or settle and all existing improvements, either on public or private property, will be fully protected from damage.

Backfill around manholes shall be Class II A.B. and shall be compacted to a minimum of 95%. In case of difficulty, a two-sack cement slurry may be used around the manholes as backfill.

All supports shall be removed after construction is completed, unless otherwise directed by the City Engineer and shall be withdrawn in a manner that will prevent the caving of the sides of the excavation. All openings caused by the removal of supports shall be filled with suitable material and properly compacted.

120-1.04 Bedding and Initial Backfill: Bedding shall be defined as that material supporting, surrounding and extending to one foot above the top of the pipe. Where it becomes necessary to remove boulders or other interfering objects at subgrade for bedding, any void below such subgrade shall be filled with the bedding material designated in the Standard Plans and Specification. Where concrete is specified to cover the pipe, the top of the concrete shall be considered as the top of the bedding.

If soft, spongy, unstable, or other similar material is encountered upon which the bedding material or pipe is to be placed, this unsuitable material shall be removed to the depth approved by the City Engineer and replaced with bedding material suitably densified.

Bedding material shall first be placed so that the pipe is supported for the full length of the barrel with full bearing on the bottom segment of the pipe equal to a minimum of 0.13 times the outside diameter of the barrel or 4" minimum whichever is greater. Densification of bedding for pipe shall be accomplished after the sheeting or shoring has been removed from the bedding zone. Alternate methods of pipe laying recommended by the pipe manufacturer may be used if approved by the City Engineer.

Bedding material shall be Class II A.B. Pea gravel is not acceptable. No aggregate shall exceed 3/4".

120-1.05 Pipe Laying: Pipe shall be protected during handling against impact shocks and free fall. Pipe will be carefully inspected in the field before and after laying. If any damage is discovered in a pipe after it has been laid, it shall be subject to rejection. Any corrective work shall be approved by the City Engineer and shall be at no cost to the City.

When connections are to be made to any existing pipe, conduit, or other appurtenances, of which the actual elevation or position cannot be determined without excavation, the Contractor shall excavate for, and expose, the existing improvement before laying any pipe or conduit at no cost to the City. City of Brentwood inspection shall be prior to the connection. When the new facilities interfere with the existing flow of sewage, the Contractor shall provide satisfactory bypass facilities at his expense.

The pipe shall be laid without break upgrade from structure to structure, with bell end upgrade.

All joints shall be cleaned and then sealed with the type of materials approved by the City. The material shall be recommended by the pipe manufacturer for the purpose intended and approved by the City Engineer, in order to obtain a watertight joint against leakage and infiltration under all conditions of expansion, contraction, and settlement.

Whenever the work ceases for any reason, the end of the pipe shall be securely closed with a tight fitting plug or cover.

Whenever existing pipes are to be cut or abandoned, the open ends of said pipes shall be securely closed by a tight fitting plug or wall of concrete not less than 2 feet thick, or by a tight brick wall no less than 8 inches thick with cement mortar joints.

Where groundwater occurs, the bottom of the trench shall be kept entirely free of water during the pipe laying, filling the joints, and as long thereafter as approved by the City Engineer.

Stoppers for pipes and branches left unconnected shall be made of the same material as the pipe or of resilient joint material conforming to Section 120-1.02E, "Resilient Joint Material". After placing the stopper, it shall be covered with a layer of sealant. The sealant shall be sufficiently fluid to ensure free flow around the stopper.

Concrete pipe with elliptical reinforcement shall be laid with the minor axis of the reinforcement cage in a vertical position.

Pipe shall be laid true to line and grade. Any pipe that is not in true alignment or shows any undue settlement after laying shall be taken up and relaid at the Contractor's expense.

Pipe sections shall be laid and joined in such a manner that the offset of the inside of the pipe at any joint will be held to a minimum at the invert. The maximum offset at the invert of pipe shall be 10 percent of the inside diameter of the pipe or 3/8-inch (9.5 mm), whichever is smaller. The following are the maximum offsets for a given pipe diameter:

6” Φ pipe	-	0.75”
8” Φ pipe	-	1.00”
10” Φ pipe	-	1.25”
12” Φ pipe	-	1.25”

In joining bell and spigot pipe, the spigot of each pipe shall be so seated in the bell of the adjacent pipe as to give a maximum of 3/8-inch (9.5 mm) annular space all around the pipe

in the bell. Unavoidable offsets shall be distributed around the circumference of the pipe in such a manner that the minimum offset occurs at the invert.

When pipe is laid in a sheeted trench, all sheeting against which concrete cradle is to be placed shall be faced with at least one thickness of building paper and the sheeting shall be withdrawn without displacing or damaging the cradle.

After the joints have been made, the pipe shall not be disturbed in any manner.

120-1.06 Pipe Joints:

1. Vitrified Clay Pipe - Either polyvinyl chloride or polyurethane compression joints may be used. Materials shall conform to ASTM Designation: C-425.

   Joints shall contain two sealing components, one bonded to the outside of the spigot and the other bonded to the inside of the bell. Sealing components shall be a plasticized polyvinyl chloride compound or polyurethane elastomer bonded to pipes and fittings at the pipe factory, and shall be cured to a uniform hardness and compressibility. The sealing components shall be shaped, sized, bonded, and cured in such a manner as to form a tight, dense, and homogeneous compression coupling when the joint is assembled. Any imperfection in the sealing components will be cause for rejection.

   Upon installation, the meeting surfaces shall be wiped clean of dirt and foreign matter, then an approved lubricant shall be applied to the joint surfaces. The spigot shall be positioned inside the bell and the joint shoved home. For large diameter pipe, a lever attachment or bar cushioned with a wooden block shall be used to shove the joint into place.

In no case shall a bar be used on an unprotected joint surface. Mating surfaces shall be in tight contact with each other upon completion of the joint installation.

2. Cast Iron or Ductile Iron Pipe - Cast and ductile iron pipe joints shall comply with the following requirements for the types shown:

Type of Joint	**Specification**
Slip-on	ANSI A21.11 (AWWA C111)
Mechanical Joint	ANSI A21.11 (AWWA C111)
Flanged Joint	ANSI B16.1, B.16.2, ANSI A21.10 (AWWA C110)
Flanged Joint (Threaded Flanges)	ANSI B2.1

All rubber gaskets, push-on, mechanical and flanged joint fittings for cast iron or ductile iron pipe shall be manufactured in accordance with ANSI A21.10 (AWWA C110).

Slip-on Joint - The gasket and gasket seal inside the bell shall be wiped clean before the gasket is inserted. A thin film of soft vegetable soap compound shall be applied to the gasket and the outside of the spigot end of the pipe. The spigot shall then be positioned inside the bell and shoved home. Lubricant other than that furnished with the pipe shall not be used unless approved by the City Engineer.

Mechanical Joints - The outside of the spigot and the inside of the bell shall be thoroughly cleaned of foreign matter. The gland and gasket shall then be slipped onto the spigot end of the pipe. The gasket shall be pressed evenly into the bell only after the spigot is seated in the bell. The gland shall be brought up evenly by tightening alternately the nuts spaced 180 degrees apart. Bolts and nuts shall be coated with mastic following tightening.

Flanged Joints - Flanged joints shall be firmly and fully bolted with machine bolts of proper size. Full circle reinforced neoprene rubber gaskets 1/16" thick shall be used at all flanged joints. Bolts and nuts shall be coated with mastic following tightening.

120-1.07 Existing Manholes: Existing manholes shall be adjusted to grade, removed and replaced, repaired or abandoned as shown on the plans and in accordance with the provisions of Section 15 of the Standard Specifications, "Existing Highway Facilities."

When designated on the plans, or directed by the City Engineer, existing manhole frames and covers shall be reset on new structures. Upon completion of the adjustment of

existing manholes to grade, the manhole cover shall conform to the planed surface as specified for the finished hot mix asphalt surface, Section 39 of the Standard Specifications.

Unless otherwise specified on the plans, all existing manholes, lampholes and terminal cleanout frames and covers that are removed become the property of the City of Brentwood and shall be delivered to the City Corporation Yard.

120-1.08 Sewer Structures: New manholes for sewers shall be constructed in accordance with the details shown on the Standard Plans, as specified in this Section and as directed by the City Engineer.

Precast manholes shall conform to City of Brentwood Standard Plans SS-2 and SS-3, and as shown on the plans as well as to the applicable sections in Section 70 of the Standard Specifications, "Miscellaneous Drainage Facilities" except for measurement and payment.

Manhole frames shall be secured to the manhole structure or riser barrels with full mortar bed or full circle concrete collar that will effectively secure the frame to the manhole structure and provide a uniform bearing for the frame.

Concrete for sewer structures shall be Class A as described in Section 90-1.01 unless otherwise shown on the plans.

When the manhole is located in the pavement area, it shall not be constructed to final grade until pavement has been completed.

Water stops shall be required at all sewer manholes; location will be at the discretion of the City Engineer.

Where new work is jointed to the surface of unfinished work, the latter shall be thoroughly cleaned.

All joints on the inside of structures and sewers shall be neatly struck and pointed where plastering is not specified on the plans.

The inside bottoms of existing manholes, where new connections are made, and of new manholes shall be shaped to provide “flow-through” channels conforming to the size and shape of the lower portion of the inlets and outlets of the manholes. The channels shall vary uniformly in size and shape from inlet to outlet.

No pipe shall project into a manhole and in no case shall the bell of a pipe be built into the wall of a manhole or structure.

All concrete shall be cured for a period of not less than 7 days after being placed and shall be protected in place from damage.

120-1.09 Coating Manholes:

General - The interior of all sanitary sewer manholes downstream from pump stations, drop manholes, manhole pumping stations, all manholes constructed on sewer lines 10 inches and larger, and any other structure where the City Engineer determines that hydrogen sulfide gas may be a problem shall receive a polyurethane coating.

Material - The coating shall be a high build, two-component, 100% solid, non-solvented, hybrid polyurethane material. The flash point of the individual components and the fluid mixture shall be a minimum of 415 degrees F (COC). Application shall be 50 mils or greater in thickness.

The cured coating shall have a Shore D hardness of 57 at 77 degrees F and shall be capable of passing the flexibility test as prescribed by ASTM D-1737 using an 8-mm diameter mandrel. The coating shall have a minimum tensile strength of 2,500 PSI and a recoverable elongation of 30% minimum. It shall have good impact resistance and shall be able to bridge up to 1/8-inch settling crack, which may take place in the concrete structure, without damage to the coating.

At a minimum, the coating shall be resistant to attack from the following but not limited to: Oxidizing agents such as bleaches, sulfuric, acetic, hydrochloric, phosphoric, nitric, chromic, oleic, and stearic acids, sodium and calcium hydroxides, ammonium, sodium, calcium, magnesium, and ferric chlorides, ferric sulfate, petroleum oils and greases, vegetable and animal oils, fats, greases, soaps and detergents. The coating shall be impermeable to sewage gases and liquids and shall be non-conducive to bacterial or fungus growth.

Surface Preparation - New concrete shall be cured 30 days. All foreign matter shall be removed from the surface of old concrete using solvents (no alcohol shall be used) if necessary to remove grease. For old concrete all surfaces to be coated will be sandblasted or waterblasted to remove all residue, loose grout or loose brick. Surfaces of new concrete shall be washed with ten percent (10%) muriatic acid solution and flushed with water to remove lime. Surfaces, which have retained a glossy smooth surface, shall be abrasive waterblasted, sandblasted or power wire brushed to produce a satisfactory anchor for the coating. The surface must be dry when applying the coating. Cracks shall be sealed by spraying directly into the crack and then overcoating while still tacky.

Any steel surfaces in the area to be coated will be prepared and primed as required.

After blast cleaning the surface as described above, the surfaces of the concrete shall be dried by air blowing for four hours.

Application - The polyurethane coating shall be applied by high-pressure airless spray with the two components mixing just before the spray gun. During application, the applicators, including any persons in the immediate area, shall wear protective clothing including facemasks, and anyone in the manhole during spraying shall be supplied a respirator.

120-1.10 Trench Resurfacing: Trenches in existing streets, except streets which are to be closed or abandoned, shall be resurfaced with the type and thickness of bases, surfacing or pavement shown on the plans or designated by the City Engineer. Unless otherwise specified, trench resurfacing shall be accomplished in accordance with the Standard Plans ST-25a and ST-25b.

Upon notice from the City Engineer, the Contractor shall proceed immediately to resurface any part of any excavation, without waiting for completion of the full length of the sewer.

All trenches shall be backfilled, patched with a minimum of 3" of cutback, and rolled to provide a smooth transition between the temporary and existing pavement at the end of each working day. Any temporary trench patching shall be subject to the approval of the City Engineer. Using tires of heavy equipment to roll the temporary paving is not considered acceptable.

120-1.11 Testing:

120-1.11A Cleaning: Prior to performing tests, the pipe installation shall be thoroughly cleaned. Cleaning shall be performed by the Contractor by means of an inflatable rubber ball. The ball shall be of a size that will inflate to fit snugly into the pipe to be tested. The ball shall be controlled with a tag line. The ball shall be placed in the last manhole on the pipe to be cleaned, and water shall be introduced behind it. The ball shall pass through the pipe with only the pressure of the water propelling it. All debris flushed out ahead of the ball shall be removed at the first downstream manhole. In the event cement or wedged debris or a damaged pipe shall stop the ball, the Contractor shall remove the obstruction.

120-1.11B General: All leakage tests shall be completed and approved following the placement and densification of the backfill, but prior to placing of permanent surfacing.

When leakage or infiltration exceeds the amount allowed by the Specifications, the Contractor at his expense shall locate the leaks and make the necessary repairs or replacements in accordance with the Specifications to reduce the leakage or infiltration to

the specified limits. Any individually detectable leaks shall be repaired, regardless of the results of the tests. Air pressure tests shall be made on completed pipelines.

120-1.11C Air Pressure Test: The Contractor shall furnish all materials, equipment and labor for making an air test. Air test equipment shall be approved by the City Engineer.

Each section of sewer shall be tested between successive manholes by plugging and bracing all openings in the main sewer line and the upper ends of all house connection sewers. Prior to any air pressure testing, all pipe plugs shall be checked with a soap solution to detect any air leakage. If any leaks are found, the air pressure shall be released, the leaks eliminated, and the test procedure started over again.

The final leakage test of the sewer main line and branching house connection sewers, shall be conducted in the presence of the City Engineer in the following manner:

1. Clean pipe to be tested by propelling snug fitting inflated rubber ball through the pipe with water.

2. Plug all pipe outlets with suitable test plugs. Brace each plug securely.

3. If the pipe to be tested is submerged in ground water, insert a pipe probe by boring into the backfill material adjacent to the center of the pipe, and determine the pressure in the probe when air passes slowly through it. This the back pressure due to ground water submergence over the end of the probe. All gauge pressures in the test should be increased by this amount.

4. Add air slowly to the portion of the pipe installation under test until the internal air pressure is raised to 4.0 psig.

5. After an internal pressure of 4.0 psig is obtained, allow at least two minutes for air temperature to stabilize, adding only the amount of air required to maintain pressure.

6. When pressure decreases to 3.5 psig, start stopwatch.

MINIMUM HOLDING TIME IN SECONDS REQUIRED FOR PRESSURE TO DROP FROM 3½ TO 2½ PSIG

PIPE DIAMETER

Secs	4"	6"	8"	10"	12"	15"	18"	21"	24"	27"	30"	33"	36"	39"
25	4	10	18	28	40	62	89	121	158	200	248	299	356	418
50	9	20	35	55	79	124	178	243	317	401	495	599	713	
75	13	30	53	83	119	186	267	364	475	601	743	898	1020	837
100	18	40	70	110	158	248	356	485	634	765	851	935		
														1105
125	22	50	88	138	198	309	446	595	680					
150	26	59	106	165	238	371	510							
175	31	69	123	193	277	425								
200	35	79	141	220	317									
225	40	89	158	248	340									
250	44	99	176	275										
275	48	109	194	283										
300	53	119	211											
350	62	139	227											
400	70	158												
450	79	170												
500	88													
559	97													
600	106													
650	113	170	227	283	340	425	510	595	680	765	851	935	1020	1105

NOTES:

(1) To be used when testing one diameter only.

(2) The above air pressure test procedure is based on ASTM C828. Any special situations or conditions shall conform to this ASTM Standard.

SAFETY NOTE:

The air test may be dangerous if, because of ignorance or carelessness, a line is improperly prepared. It is extremely important that the various plugs be installed and braced in such a way as to prevent blowouts. Inasmuch as a force of 250 lbs. is exerted on an 8" plug by an internal pipe pressure of 5 psi, it should be realized that sudden expulsion of a poorly installed plug or of a plug that is partially deflated before the pipe pressure is released can be dangerous.

As a safety precaution, pressurizing equipment should include a regulator set at 6-8 psi to avoid over pressurizing and damaging an otherwise acceptable line. No one shall be allowed in the manholes during testing.

IF THE TIME LAPSE IS LESS THAN THAT SHOWN IN THE TABLE, THE CONTRACTOR SHALL MAKE THE NECESSARY CORRECTIONS TO REDUCE THE LEAKAGE TO ACCEPTABLE LIMITS.

120-1.11D Televising of Sanitary Sewers: Following the placement and densification of backfill and completion of other required testing, but prior to the placing of pavement, the City requires the Contractor to televise all sewer lines for conformance to the plans and specifications. If any defective pipe or condition is discovered by televising, it shall be corrected at no cost to the City. Any corrective work proposed shall be approved by the City Engineer.

The City may also require televising of sewer lines, at no cost to the City, prior to the expiration of the one-year warranty. If a defective condition is unaccountably found, it shall be presumed to be caused by defective workmanship or materials. The Contractor shall be notified and shall correct the work in a manner approved by the City Engineer.

The Contractor shall furnish to the City the results of the televising on a CD format. The Contractor shall assume all labor and material costs to televise the pipelines.

120-1.11E Manhole Vacuum Test: All manhole testing shall be done in the presence of the City Engineer or his authorized representative. The Contractor shall furnish all labor, materials, tools and equipment necessary to perform the test and any work incidental thereto. Any damage resulting from testing shall be repaired by the Contractor at his/her expense.

All sanitary sewer manhole vacuum tests shall be completed and approved by the City Engineer following placement and densification of the backfill around the manhole, but prior to placing of permanent surfacing.

The Contractor shall test the manhole up to and including the cone, and shall make all repairs necessary to achieve a final passing test. All lift holes shall be filled with non-shrink grout prior to testing. All manhole sections shall be visually inspected for leaks. Any cracks or leaks shall be repaired by the Contractor prior to any testing. All repairs shall be made with non-shrink grout. Any alternate repair methods shall be approved by the City Engineer.

All pipe inlets and outlets in the manhole shall be securely plugged to sufficiently hold against vacuum pressure during testing, and removed following successful completion of the testing. A rubberized test plate shall be placed on the manhole dome after potential leaks on the top of the dome have been sealed.

A suitable vacuum pump shall be used to reduce the pressure inside the manhole to a vacuum of ten (10) inches of mercury, stabilizing the vacuum at ten (10) inches of mercury for one (1) minute. The vacuum pump shall be shut off, and with the valves closed, the pressure increase (loss of vacuum) shall be measured inside the manhole

during the test hold period. The maximum allowable pressure increase (loss of vacuum) shall be one (1) inch of mercury over a 60-second test hold period.

If the vacuum drops below nine (9) inches of mercury within the test period, the leakage shall be considered excessive. The Contractor shall make all repairs necessary to achieve a passing test and the manhole shall be retested. Manhole repairs and retesting shall proceed until a passing test is completed.

SECTION 130

POTABLE WATER FACILITIES

130-1.01 Description: This work consists of furnishing and installing pressure water pipe, control valves, thrust blocks, fire hydrant tees, fire hydrants and service lines, all as shown on the Standard Plans or as directed by the City Engineer, and as specified in these Specifications.

130-1.01A Right of Way: All City owned and maintained potable water facilities located on private property shall meet the more restrictive of the following criteria:

1. Minimum width of any easement shall be 15 feet for one (1) utility, with greater widths required for multiple utilities.

2. All easements shall have a minimum width in feet to the required trench width according to the standard detail for trench backfill, plus two (2) additional of width for every foot of depth of the pipe as measured from the bottom of the pipe to finished grade. All pipes shall be centered within their easements.

130-1.02 Materials: All pipes and fittings (except valves) shall have a minimum working pressure of two hundred (200) pounds and shall conform to the following requirements.

130-1.02A Ductile Iron Pipe: Ductile iron pipe for water and other liquids shall be furnished in the sizes, classes, grades or nominal thickness, and joint types designated on the Standard Plans and these Standard Specifications.

Ductile iron pipe shall comply with ANSI A21.51 (AWWA C151).

Ductile iron pipe is to be used on all water crossings or where required by State Health Code sanitary sewer/water line clearance regulations. Pipe shall utilize either flange, mechanical or push on rubber gasketed joints. Pipe shall be minimum standard thickness Class 50 with standard cement lining (USA Std. A21.4).

Ductile iron pipe joints shall comply with the following requirements:

Type of Joint	Specification
Rubber Gasket Push-on Joint	ANSI A21.11 (AWWA C111)
Mechanical Joint	ANSI A21.11 (AWWA C111)

Flanged Joint	ANSI B16.1, B.16.2 and A21.10 (AWWA C110)
Flanged Joint (Threaded Flanges)	ANSI B2.1.

All rubber gaskets, push-on, mechanical and flanged joint fittings for ductile iron water pipe shall be manufactured in accordance with ANSI A21.10 (AWWA C110).

Unless otherwise specified, the internal surfaces of ductile iron water pipe and fittings shall be lined with a uniform thickness of cement mortar then sealed with a bituminous coating in accordance with ANSI A21.4 (AWWA C104). The outside surfaces of cast iron and ductile iron pipe and fittings for general use shall be coated with a bituminous coating 1 mil (0.0254 mm) thick in accordance with ANSI A21.10-93 (AWWA C110 Section 10-10).

130-1.02B Polyvinylchloride (PVC) Pipe: Polyvinyl Chloride pipe shall meet the requirements of AWWA C-900 "Polyvinyl Chloride (PVC) Pressure Pipe" for pipe sizes 4" through 12", AWWA Class 200 minimum. For pipe sizes greater than 12", PVC pipe shall meet the requirements of AWWA C-905, "Polyvinyl Chloride Pressure Pipe."

All pipe***s*** shall be suitable for use as a pressure conduit. Provisions shall be made for expansion and contraction at each joint with a double "O" ring elastomeric gasket seal meeting the requirements of ASTM D-1869 and F-477. Solvent welded joints will not be permitted. The bell section shall be designed to be at least as strong as the pipe wall.

Fittings for PVC pipe shall be Class 200 ductile iron only. Thrust block with mechanical joint fitting are required at every joint along a curve and at every joint 20 feet on either side of an alignment change. All PVC taps shall have stainless steel tapping sleeve.

Reverse kickers shall be required on all hydrant runs.

130-1.02C Valves: This specification includes six (6") inches through twelve (12") inches diameter gate valves and butterfly valves larger than 12" in diameter and operators intended for buried service in a potable water system.

Gate valves shall have a resilient wedge with non-rising stem meeting or exceeding the latest revisions of AWWA C509 with a design working pressure of two hundred-fifty (250) psi.

Butterfly valves shall meet or exceed the latest revisions of AWWA C504-00, Class 150B with a design working pressure of one hundred fifty (150) psi.

6” thru 8” valve ends shall be mechanical joint or flanged in accordance with AWWA C-500 unless otherwise specified; 10” or larger valves shall be flanged with flange by mechanical adaptors bolted to the valve.

Valves for use with flanged pipe shall be cast with Class 200 flanges; dimensions and drilling shall conform to ASA B16.1. Flange bolt holes shall be spot faced if flange fillets interfere with bolt heads and nuts.

All valves shall receive a minimum of a 5-pound anode or as specified herein.

Tapping sleeves for ductile iron water mains shall be full body shell, with full body gasket or split sleeve, end and side gasket seal. Inlet flange and tapping gate valve flanges shall be Class 200 flange. Tapping sleeves shall be M & H 1174 and 1274 (all sizes); Romac SST, Clow 3490-AS (over 12 inch only), Mueller H-304 or an approved equal. All taps shall have restrainers.

All stem seals, gate valves and butterfly valves, shall be O-rings only.

Wrench nuts shall the top of the valve stem and secured by nut or key and shall be one and fifteen sixteenths (1-15/16) inch square at the top and two (2) inches square at the bottom.

All nuts, bolts and stems on valves shall be Type 304 stainless steel.

The open direction shall be left (counter-clockwise) and the closed direction right (clockwise).

Appropriate appurtenances of each new air-relief, air vacuum, or combination valve, and any such valve installed to replace an existing valve found to be subject to flooding hazards shall be:

1. Installed above grade and screened vent caps (see City Std. W-11) shall be one (1) foot above the calculated 100-year flood water level or as otherwise approved by City Engineer;
2. Readily accessible for inspection, maintenance and replacement;
3. Constructed and designed to prevent the entry of rainwater or runoff, and bird, insects, rodents or other animals;
4. Installed pursuant to AWWA C-512 and AWWA Manual 51.

130-1.02D Cast Iron Fittings: Cast iron fittings shall be Class D fittings conforming to ASTM Designation: 126 and shall be one hundred fifty (150) pounds standard.

130-1.02E Valve Boxes: Valve boxes and covers shall conform to City of Brentwood Standard Plans.

130-1.02F Gaskets: Gaskets for flanged joints shall be full circle one-sixteenth (1/16) inch rubber composition gaskets.

130-1.02G Thrust Blocks: Thrust blocks shall conform to City of Brentwood Standard Plans. Concrete for thrust blocks shall be Class B with one and one-half (1-1/2) inch max. size aggregate in accordance with Section 90 of the Standard Specifications.

130-1.02H Fire Hydrants: Fire hydrants shall conform to the requirements of the local Fire District and the City of Brentwood and as shown on the Standard Plans and the following:

1. All hydrants shall comply with ANSI/AWWA C503-88, “Wet-Barrel Fire Hydrants,” latest revision.

2. All operating valves shall be located below grade and protected by "break-off" features so that no water flows if hydrant is knocked off.

3. Hydrant main valve seat shall be a minimum 5-1/4 inches.

4. Hydrant valve shall be molded non-swelling rubber.

5. Hydrant main valve seat shall be threaded into a bronze-to-bronze subseat.

6. Hydrant bury shall be 36 inches from connection to ground flange. Materials to extend the length of bury must be readily available.

7. Hydrant shall be painted with Kelly-Moore 1700-63 Safety Yellow Gloss Alkyd Rust Inhibitive Enamel or approved equal.

130-1.02I Service Lines: Service lines up to and including meter connection shall be as detailed in City of Brentwood Standard Plans as applicable for the service intended and with the AWWA Standard C-800, except as hereinafter modified.

1. Threads for line pipes shall be as specified in the AWWA standard for threads for underground service line fittings.

2. Type of service line pipe shall be limited to the following:

   a. Copper water tube, Type K or ASTM B-88.

   b. Services two (2) inches and larger shall be considered as a special condition and will require the prior approval of the City Engineer.

   c. Six (6)-inch PVC pipe may be tapped for 3/4" maximum service. Eight (8) inch PVC pipe may be tapped for one (1) inch maximum service. Saddles or service clamps shall be used on all PVC taps and shall be designed specifically for PVC pipe. Saddles or service clamps shall be Mueller or approved equal.

130-1.02J Water Meters: Unless otherwise specifically noted, water meters will be purchased and installed by the Developers/Contractors per the City's requirements.

A minimum of ¾" water meter size shall be used for a single family residential with a yard. However, a minimum 1" meter size shall be installed if one of the following conditions exists:

1. A minimum static pressure in the street is fifty (50) psi or less during the morning peak summer months, or;

2. The lot size is seven thousand (7,000) square feet or greater, or;

3. Fire sprinklers are installed.

130-1.03 Installation:

130-1.03A Installation of Water Mains:

130-1.03A1 Description: The Contractor shall, unless specified otherwise, furnish all material, equipment, tools, and labor necessary to do the work required, and unload, haul and distribute all pipe, castings, fittings, valves, hydrants and accessories. The Contractor shall also remove pavement as needed; excavate trenches and pits to the required dimensions; excavate bell holes; construct and maintain all bridges for traffic

control sheet, brace, and support the adjoining ground or structures where necessary; handle all drainage or ground water; provide barricades, guards, and warning lights; lay and test the pipe, castings, fittings, valves, hydrants, and accessories; backfill and consolidate the trenches and pits; restore the roadway surface; remove surplus excavated material; clean the site of the work; and maintain the street or other surface over the trenches as specified. All connections to existing lines shall be flanged by fittings with isolation plates.

130-1.03A2 Excavation: Trench excavation shall conform to the requirements of the City of Brentwood Standard Plans.

The bottom of the trench shall be carefully graded in conformance with Section 120-1.03 of the Sewer Specifications.

130-1.03A3 Jacking and Boring: Jacking and boring of water pipe shall conform to the City of Brentwood Standard Plans.

130-1.03A4 Pipe Laying: The pipe shall be handled with care at all times and in a manner that meets the approval of the City Engineer. Extreme care shall be exercised in the use of any mechanical devices used in laying the pipe to avoid scarring or other damage.

The City Engineer shall be the judge of whether a pipe is seriously damaged and any pipe so classified shall be permanently removed from the site of the work.

The inside of all pipes and couplings shall be free from dirt, grease, deleterious materials or any other foreign material. The open ends of all pipe previously laid shall be adequately plugged water tight whenever pipe laying operations are suspended at the end of each work day, or for any other reason.

Imported material shall be placed and thoroughly compacted across the bottom of the trench to provide full support of all the pipe. Bells and/or couplings shall have soil removed to provide a uniform bearing.

130-1.03A5 Backfilling: Backfilling shall not be completed until the pipe has been properly installed and inspected by the City Engineer.

Backfill materials shall be hand placed on both sides of the pipe simultaneously to prevent any undue strain on the pipe.

The trench shall be backfilled and compacted 95% by mechanical means as shown on the Standard Plans. This Standard shall be used as a minimum in all construction.

Imported backfill material shall be of a granular, sandy nature, free of vegetation, silt, clay and shall have a minimum sand equivalent (S.E) value of 20 as determined by the State of California, Division of Highways, Standard Test Procedures.

Backfilling and bedding for PVC pipe shall be performed in accordance with Section 120-1.04 “Bedding and Initial Backfill” of these Specifications for PVC pipe.

All pipe damaged during construction operations shall be replaced by the Contractor as his expense to the satisfaction of the City Engineer.

130-1.03A6 Trench Resurfacing: Trenches in existing streets, except streets which are to be closed or abandoned, shall be resurfaced with the type of thickness of bases, surfacing or pavement shown on the Standard Plans for that street section.

Upon notice from the City Engineer, the Contractor shall proceed immediately, without waiting for completion of the full length of line, to resurface any part of any excavation

130-1.03B1 Testing: The test for hydrostatic pressure shall commence no sooner than seven (7) days after the last concrete thrust block has been cast with standard cement or at least after thirty-six (36) hours with high early strength cement, and after backfilling and compacting the trench to the plane upon which the asphalt concrete surfacing is to be placed. The Contractor shall take the necessary precautions to insure that the pipefittings, couplings, valves, and other appurtenances are not displaced during the test.

Test shall consist of one hundred fifty (150) psi for four (4) hours.

Non-potable pressure testing shall be the same as the domestic water line.

It shall be the Contractor's responsibility to locate and repair the points of line failure; fill, recompact the trench and retest the section of line (including pressure test) in the event the line fails the leakage test.

130-1.03B2 Interruption of Service: No valve or other control on the existing system shall be operated for any purpose by the Contractor. The City of Brentwood will operate all valves, hydrants, blowoffs and curb stops.

The contractor shall submit a written valve manipulation request to the City Engineer a minimum of two (2) working days prior to the shutdown schedule.

130-1.03C Disinfecting Water Mains: Newly installed water mains, or water mains that have been taken out of service for maintenance or repair, shall be disinfected

and sampled for bacteriological quality in accordance with AWWA Standard, "Disinfecting Water Mains," C-651-05. The samples shall be negative for coliform bacteria prior to the main(s) being placed into service.

130-1.03C1 General: The interior of all pipe, fittings, and other accessories shall be kept free of dirt and foreign material. When the City Engineer suspects bacterial contamination of interior pipe surfaces during pipe laying operations, the City Engineer may order said surfaces to be swabbed with an approved bactericidal solution.

130-1.03C2 Isolation of New Mains: All new water lines shall be completely isolated from any existing main until they have been tested and disinfected to the satisfaction of the City Engineer. New mains may be filled from existing mains only by temporary tap thereto and through a system of one (1) shut-off valve and two (2) check valves so arranged as to provide positive backflow prevention. When new main is properly disinfected and the isolation dam is removed from connection flange or other type connection is made, extreme care shall be exercised to prevent the entry of any foreign material or contaminant. Connection fittings shall be thoroughly swabbed with an approved disinfectant immediately prior to their installation.

Flush the mains thoroughly at the end of the installation period. The orthotolidine test shall show no more chlorine in the water leaving the main than in the water entering the main. At no time the contractor shall flush chlorinated water onto private property or within the public right of way without the written consent of the City Engineer. The Contractor shall submit a plan for disposing of the chlorinated water to the City Engineer five (5) working days prior to flushing.

The Contractor shall have an EPA certified lab collect a sample for bacteriological examination at the Contractor's expense. On the label, give the date, address, and the name of the job. Where possible the sample should be taken from a service located near the end of the chlorinated section. Otherwise, it may be taken through the same blowoff used for flushing the heavily chlorinated water out of the main so that the blowoff is sterilized.

If the bacteriological tests are unsatisfactory, the main shall be re-sterilized using Method No. 2, and the sterilization repeated, if necessary, until satisfactory results are obtained.

130-1.03C3 Method No. 1 - H.T.H. Tablet Method: This method is preferred for short jobs and for a small diameter pipe of any kind. It cannot be used where trench water has entered the main. The main cannot be flushed prior to sterilization, so the method requires that the pipe be kept clean during installation.

Using Permatex No. 1 as an adhesive, fasten the required number of tablets (see Table I) to the inside top of each length of pipe. The tablets may be fastened to the pipe before it is placed in the trench. To be sure that these tablets start to dissolve as the water enters the main, they should be placed in rows about half an inch above the bottom of the pipe.

Table I
NUMBER OF TABLETS REQUIRED FOR PIPE STERILIZATION

	PIPE DIAMETER			
Length of Section	**6”**	**8”**	**10”**	**12”**
13’ or less	4	4	6	10
18’	4	6	10	12
20’	4	6	10	14
30’	6	10	20	
40’	8	12	18	28

When using dresser or similar couplings, an additional tablet shall be crushed and placed in the annular space between the coupling and the pipe.

130-1.03C4 Method No. 2 - H.T.H. Solution with Hand Pump Method: This method is general in scope and must be used when it is necessary to re-chlorinate an existing main. When this method is used on a main coupled with dresser or similar couplings, a pinch of H.T.H. powder shall be placed in each coupling as the main is laid.

Equipment required includes an ordinary hand test pump, solution hose, and a five-gallon can to contain the chlorine solution.

Make up chlorine solution according to Table II. The quantity required is estimated from Table II. An excess volume should be prepared so as not to empty the container before the job is complete.

Table II CHLORINE SOLUTION STRENGTH HAND PUMP METHOD OF MAIN CHLORINATION Amount of Chemical in 5 Gallons of Solution		
Discharge Rate	**GPM**	**H.T.H.**
10		0.50 lbs.
20		1.00 lbs.
35		1.75 lbs.
50		2.00 lbs.
75		3.00 lbs.
100		4.00 lbs.

Connect pump to main. Use a corporation cock for this purpose and make connection at or ahead of the inlet end of the new line.

After flushing the line, thoroughly adjust flow by timing the period required to fill a five-gallon can.

Pump chlorine solution into the line at a rate of one gallon of solution in three minutes.

Continue pumping until orthotolidine tests on a sample taken from discharge end of line being treated, shows a red color, or until the odor of chlorine is noticed.

After finishing application of chlorine, close valve or blow-off. Disconnect and flush pump thoroughly with fresh water.

Refer to instruction flushing and sampling.

If the above procedure has to be varied because of some unusual condition, it will be necessary only to regulate the pump, control the water flow, or adjust the strength of the chlorine solution to give a dose of at least 50 ppm.

Choose a suitable discharge rate and determine the time required to apply the chlorine from Table III.

TABLE III
Time in Minutes to Apply Chlorine to 100 Feet of Pipe

Discharge Rate GPM	**6"**	**8"**	**10"**	**12"**
10	15	26	41	59
20	7	13	20	29
35	4	8	12	17
50	3	5	8	12
75	4	6	8	
10	3	4	6	

Compute the gallons of solution required by dividing this time by 3.

Use Table II to determine the strength of solution required. Example: If the estimate time from Table III is 35 minutes, 11-2/3 gallons will be required; and if the discharge rate is 50 GPM, the solution should contain two pounds of H.T.H. in five gallons. Prepare fifteen gallons of solution so as to be sure of having an adequate amount.

Operate the hand pump at a rate of five gallons in fifteen minutes, or one gallon in three minutes.

Table III is used to estimate the time required to apply chlorine. For example: 700' of 8" main can be filled with chlorine solution in 35 minutes with a discharge rate of 50 GPM.

130-1.04 Existing Pipes:

130-1.04A Removal and Disposal: All existing pipes slated for renewal and disposal shall first be identified by the material and the methods available for removal and disposal.

Contractor shall comply with air quality, public health and safety, storm water pollution prevention plan, water quality, noise and hazardous material during the removal and disposal process. All hazardous materials encountered shall be handled per the current Federal, State and Local Laws.

SECTION 140

NON-POTABLE WATER FACILITIES

Section 140 will comply with Section 130, "Potable Water Facilities" with the number 130 replaced with 140 respectively with the following additions or exceptions.

140-1.02B Polyvinylchloride (PVC) Pipe: Polyvinyl chloride (PVC) pipe shall conform to AWWA C900, Class 200 and shall be purple colored. Gaskets for PVC shall be furnished by the pipe manufacturer and shall conform to ASTM F477. All pipes shall be purple in color and embossed or be integrally stamped / marked "Caution: Recycled Water in use – Do Not Drink" or similar. Pipe shall be PW Purple Plus or JM Purple Save, or approved equal.

Materials and construction of the non-potable water line shall confirm with the "Potable Water Notes" noted on the plans, except as modified herein; Title 22, Chapter 3 Regulations of the California Code of Regulations; guidelines for distribution of non-potable water developed by the American Water Works Association (AWWA); and the requirements specified herein.

Valve covers on reclaimed water line shall be of non-interchangeable shape with potable water covers and a recognizable "RW" inscription cast on the top surface.

Any above ground, exposed reclaimed water facilities shall be consistently color-coded (purple) and identified using suitable, waterproof identification tags to differentiate reclaimed water facilities from potable water facilities. Tags shall be purple in color with the words "Caution: Recycled Water in use – Do Not Drink" or similar.

SECTION 150

CORROSION CONTROL FACILITIES

All Standard Plans depicting anodes shall be sized according to the following specifications without exception or as approved by the City Engineer:

150-1.0 Soil Corrosivity Investigation:

150-1.01 General: In order to determine what corrosion control measures are required for a buried pipeline, a soil investigation shall be performed before the pipeline is installed. The following table, Table 150-1, indicates the soil investigation that must be performed for each pipeline project.

Table 150-1: SOIL INVESTIGATION REQUIREMENTS

PIPE TYPE	SOIL CORROSIVITY INVESTIGATION
Steel and Ductile Iron	In-situ soil resistivities at 500-ft. intervals and oil chemical analysis at 1000 ft. intervals.
Mortar Coated and Concrete Cylinder	In-situ soil resistivities at 500 ft. intervals and oil chemical analysis at 1000 ft. intervals
Non-Metallic Pipe with Metallic Fittings	In-situ soil resistivities at 500 ft. intervals or oil chemical analysis at 1000 ft. intervals

150-1.02 Soil Resistivity Measurements: The basic method of performing soil resistivity shall be the Wenner 4-Pin Method (Standard Plan CP-17). This test shall be performed in accordance with ASTM G-57 standard. The soil resistivity measurements and their locations shall be tabulated and submitted for review. A typical data sheet is provided in Table 150-3.

The corrosion control requirements for a particular pipeline, valve or fitting depend on the soil corrosion rating. Table 150-2 provides the corrosion rating and corresponding corrosion classification based on soil resistivity.

Table 150-2: CORROSION RATING AND CLASSIFICATION

RESISTIVITY (OHM-CM)	CORROSION RATING	CORROSION CLASSIFICATION
0 - 500	1	Extremely Corrosive
501 - 2,000	2	Corrosive
2,001 - 8,000	3	Moderately Corrosive
8,001 - 32,000	4	Mildly Corrosive
> 32,000	5	Negligibly Corrosive

Table 150-3
City of Brentwood
In-Situ Soil Resistivities
Wenner 4-Pin Method

Pipeline Location: _____Sheet _____ of _____
Pipe Size: _____Date_____
Depth to Bottom of Pipe: _____By: _____

TEST NO.	SAMPLE DEPTH ('D' FT.)	LOCATION	PIN SPACING ('D' FT.) (1)	RESISTANCE (OHM) (2)	RESISTIVITY (OHM-CM) (1)x(2)x191.5	CORROSION RATING

Resistivity Range (ohm-cm)	Corrosion Rating
0 - 500	1
501 – 2,000	2
2,001 – 8,000	3
8,001 – 32,000	4
>32,000	5

150-1.03 Soil Chemical Analysis: Corrosion control requirements for mortar coated steel and concrete cylinder pipe depends on the pH, chlorides, and sulfates found in the soil in addition to the soil resistivity. Additional corrosion ratings for mortar-coated steel and concrete cylinder pipe based on soil chemistry parameters are provided below.

Chlorides: If chlorides of 300 parts per million (ppm) or higher are found in the soil, it shall be given a corrosion rating of 1.

Sulfates: If water-soluble sulfate in soil samples exceeds 2,000 ppm and/or sulfate in water samples exceeds 1,500 ppm, the soil shall be given a corrosion rating of 1.

pH: If soils with a pH of less than 5.0 are found, the soil shall be given a corrosion rating of 1.

150-1.04 Laboratory Evaluation: Soil samples shall be tested by an approved soils testing laboratory for pH, chlorides, conductivity, sulfates and sulfides using ASTM or Caltrans test methods as detailed in Table 150-4. The preparation of the soil sample for corrosion evaluation shall be in accordance with the applicable specification.

Table 150-4
Soil Laboratory Analysis

	ASTM Method	Caltrans Method
Chlorides	D512C	422
pH	D2976/D4972/G51	532/643
Conductivity	D1125	424
Sulfate	D516(SM 4500)	417
Sulfide	D4568	

150-2.0 Corrosion Control Requirements:

150-2.01 General: The external corrosion control requirements for various types of pipe are based on the soil corrosion rating as provided in Table 150-5.

150-2.02 New Water Mains and Extensions:

Steel, Ductile Iron, Mortar Coated Steel and Concrete Cylinder Pipe: Each new main extension, of any length, from an existing metallic main, shall be electrically isolated from the existing main via an isolation flange or joint. This requirement may be altered by the City at their sole discretion. The requirements for corrosion control shall be as specified in Table 150-5. If cathodic protection is required, it shall be designed by a Corrosion Engineer as specified in 150-3.01.

Non-metallic Pipe: Extensions which are constructed out of non-metallic piping material and which utilize metallic fittings shall be provided with corrosion control as specified in Table 150-5 and section 150-2.05.

150-2.03 Test Station Spacing: Test stations shall be spaced at 1000 feet maximum intervals for all major metallic transmission and distribution metallic pipelines as directed by the City Engineer or Corrosion Engineer. In addition, test stations may be required at the starting point and ending point for each new pipeline or extensions to existing pipelines, at crossings with foreign metallic pipelines, at cased crossings and at buried insulating flanges.

150-2.04 Copper Service Laterals: Copper service laterals shall be electrically isolated from metallic water mains via an isolation fitting placed at the corporation stop. If copper piping is used to connect the water meter to the building or residence, the copper lateral shall also be isolated at the water meter. For soil types rated as 1 or 2 galvanic cathodic protection shall be implemented as shown in Table 150-5.

150-2.05 Non-Metallic Pipe with Metallic Fittings and Valves: Types of anodes and required anode sizes for various types of fittings based on soil resistivity are as presented in Tables 150-6 and 150-7. These tables contain the minimum weights for the bare anodes which does not include the weight of the anode backfill material.

Table 150-5
CORROSION CONTROL REQUIREMENTS

	Soil Resistivity (ohm-cm)			
	0 - 500	**501 - 2,000**	**2,001 - 8,000**	**Greater Than 8,000**
PIPE MATERIAL	**Rating 1**	**Rating 2**	**Rating 3**	**Rating 4&5**
Steel and Ductile Iron Pipe	1. Bonded Coating or Polybag 2. Joint Bonding 3. Test Stations 4. Cathodic Protection 5. Electrical Isolation 6. High Resistance Backfill	1. Bonded Coating or Polybag 2. Joint Bonding 3. Test Stations 4. Cathodic Protection 5. Electrical Isolation 6. High Resistance Backfill	1. Polybag Coating 2. Joint Bonding 3. Test Stations 4. Cathodic Protection 5. Electrical Isolation 6. High Resistance Backfill	1. Polybag Coating 2. Joint Bonding 3. Test Stations 4. Electrical Isolation 5. High Resistance Backfill
Mortar Coated Steel and Concrete Cylinder Pipe	1. Joint Bonding 2. Test Stations 3. Cathodic Protection 4. Electrical Isolation	1. Joint Bonding 2. Test Stations 3. Cathodic Protection 4. Electrical Isolation	1. Joint Bonding 2. Test Stations 3. Electrical Isolation	1. Joint Bonding 2. Test Stations 3. Electrical Isolation
Metallic Valves and Fittings	1. Fusion Bonded Epoxy Coating 2. Cathodic Protection	1. Fusion Bonded Epoxy Coating 2. Cathodic Protection	1. Standard Coating 2. Cathodic Protection	1. Standard Coating
Copper Piping	1. Isolation From Ferrous Piping 2. Cathodic Protection	1. Isolation From Ferrous Piping 2. Cathodic Protection	1. Isolate From Ferrous Piping	1. Isolate From Ferrous Piping
Repair Clamps	1. Stainless Steel 2. Cathodic Protection	1. Stainless Steel 2. Cathodic Protection	1. Stainless Steel	1. Stainless Steel

Table 150-6
Required Zinc Anode* Sizes**
Soil Resistivity < 1000 ohm-cm

Pipe Size (inches)	Valve (lb.)	Cross (lb.)	Tee (lb.)	Elbow (lb.)	Valveplus Fitting* (lb.)	Fire Hydrant** (lb.)	Fire Hydrant plus Tee and Valve (lb.)
4	5	5	5	5	5	5	12
6	5	5	5	5	5	12	12
8	5	5	5	5	12	12	12
10	5	5	5	5	12	12	18
12	5	5	5	5	12	12	18

* Cross, Tee or Elbow
** Includes Elbow plus Riser
*** All anodes shall be pre-packaged

Table 150-7
Required Magnesium Anode* Sizes**
Soil Resistivity > 1000 ohm-cm

Pipe Size (inches)	Valve (lb.)	Cross (lb.)	Tee (lb.)	Elbow (lb.)	Valveplus Fitting* (lb.)	Fire Hydrant** (lb.)	Fire Hydrant plus Tee and Valve (lb.)
4	5	5	5	5	5	5	9
6	5	5	5	5	5	9	9
8	5	5	5	5	5	9	9
10	5	5	5	5	9	9	17
12	5	5	5	5	9	9	17

* Cross, Tee or Elbow
** Includes Elbow plus Riser
*** All anodes shall be pre-packaged

150-3.0 Design:

150-3.01 Cathodic Protection System Design: Cathodic protection system designs for distribution and transmission pipelines will be performed and stamped by a qualified Corrosion Engineer. This person shall be responsible for the design, supervision, inspection and testing of the cathodic protection system. Corrosion Engineer refers to a person who is either a licensed Professional Corrosion Engineer in the state of California or certified as a "Cathodic Protection Specialist" by the National Association

of Corrosion Engineers (NACE). The qualifications for the Corrosion Engineer shall be submitted to the City for approval prior to commencement of the design work.

150-4.0 Materials:

150-4.01 General: Materials and workmanship shall be in accordance with all applicable state and local codes. The use of a manufacturer's name and model or catalog number is only for the purpose of establishing the standard of quality and general configuration desired. Products of other manufacturers will be considered.

150-4.02 Joint Bond Wires: Joint bond wires shall be single-conductor, stranded copper wire with 600-volt HMWPE insulation. Supply all joint bonds complete with a formed copper sleeve on each end of the wire.

Push-on, Mechanical, Ball or Flanged Joints - No. 4 AWG wires, 18 inches long.

Flexible Coupling Joints - No. 4 AWG wires, 24 inches long, with two 12-inch long insulated No. 8 AWG wire pigtails.

Insulated Flexible Coupling Joints - No. 4 AWG wire, 18-inch long, with one 12-inch long No. 8 AWG wire pigtail.

Concrete Cylinder Pipe - Joint bonds shall be supplied by the manufacturer and shall include the following:

1. Shop manufactured rod-cable-rod bonding cable as shown in the details. Rods shall be welded to the bell-and-spigot on opposite sides of the pipe at the spring line of the pipe.

2. AWG bond wires, for each joint. Total resistance of the bond or bonds at each joint shall not be greater than 120 percent of the linear resistance of a pipe section.

1. Conduct electrical continuity testing utilizing the circulating current method.

150-4.03 Galvanic Anodes:

High Potential Magnesium Alloy: (Soil resistivities > 1000 ohm-cm)
Composition:

Aluminum	0.010% Max.
Manganese	0.5 to1.30%
Zinc	0
Silicon	0
Copper	0.02% Max.
Nickel	0.001% Max.
Iron	0.03% Max.
Total Others	0.05% each or 0.3% Max. Total
Magnesium	Remainder

Zinc Anodes (ASTM B418, Type II): (Soil resistivities < 1000 ohm-cm)
Composition:

Iron	0.0014% Max.
Cadmium	0.003% Max.
Aluminum	0.005% Max.
Lead	0.003% Max.
Copper	0.002% Max.
Zinc	Remainder

Furnish a laboratory analysis guaranteeing that all anodes supplied meet all the requirements of this Specification.

Supply each anode with No. 12 AWG solid copper wire with THHN insulation, 10-feet long.

Silver braze the wire to a galvanized steel rod or strap which is cast into the anode. Seal this connection completely with electrical potting compound. The anode connection shall be stronger than the wire**.**

Anode Backfill Composition:

Ground Hydrated Gypsum	75 percent
Powdered Wyoming Bentonite	20 percent
Anhydrous Sodium Sulfate	5 percent

Anode backfill shall have a grain size so that 100 percent is capable of passing through a 20-mesh screen and 50 percent will be retained by a 100-mesh screen. The backfill mixture shall be thoroughly mixed and firmly packaged around the galvanic anode within the cloth bag by means of adequate vibration. Provide anode packaged in a plastic or heavy paper bag of sufficient thickness to protect the anode, backfill, and cloth bag during normal shipping and handling.

150-4.04 Cathodic Protection Test Stations: Flush mounted test boxes shall have a concrete body cast with a cast iron ring, with a minimum weight of 55 pounds and minimum dimensions of 8-inch inside diameter and 12-inch length. Brooks Type 1RT Traffic Box, or approved equal. Provide with a 12-pound cast iron lid with the words "CP-Test" cast into the lid.

Terminal boxes shall be high-impact molded Lexan plastic, Model T-3 as manufactured by Tinker and Rasor manufacturing Company or approved equal. The test box shall be provided with sufficient terminals for each cable. Provide terminal block with nickel-plated brass studs, washers, and lock washers.

150-4.05 Test Station Wire: Wire shall be single conductor, No. 10 AWG stranded copper with 600-volt TW, THWN, or THHN insulation and single-conductor, No. 8 AWG stranded copper with 600-volt TW, THWN, or THHN insulation.

150-4.06 Permanent Reference Electrodes:

Prepackaged Zinc Reference Electrodes
Material: ASTM B418, Type II.
Dimensions: 1.4 inches by 1.4 inches by 9 inches.

Wire: No. 12 AWG stranded copper wire with yellow, 600-volt TW, THWN, or THHN insulation. The wire shall be a minimum of 25 feet long and attached to the electrode core by the manufacturer's standard connection. Connection shall be stronger than the wire.

Backfill: 50 percent gypsum, 50 percent bentonite, in a permeable cloth bag, or approved equivalent.

Packaging: Provide electrode packaged in a plastic or heavy paper bag of sufficient thickness to protect the electrode, backfill, and cloth bag during normal shipping and handling.

150-4.07 Shunts: Anode metering shunts shall be 0.01 ohm, 6-amp capacity with 1% accuracy.

150-4.08 Thermite Weld Materials: Thermite weld materials shall consist of wire sleeves, welders, and weld cartridges according to the weld manufacturer's recommendations for each wire size and pipe or fitting size and material. All welding

materials and equipment shall be the product of a single manufacturer such as “Cadweld” by Erico Products, Inc., “Thermoweld” by Continental Industries, Inc., or approved equal. Each cable shall be fitted with a copper sleeve for accomplishing the weld. Interchanging materials of different manufacturers is not acceptable.

150-4.09 Ground Clamp: Ground clamp shall be sized to fit the copper tubing and wire size, made out of high copper alloy, and rated for direct burial.

150-4.10 Thermite Weld Caps: Coating material for cable-to-pipe connections shall be Handicaps as manufactured by Royston Products or Propoxy 20 epoxy putty as manufactured by the Hercules Chemical Company or approved equal.

150-4.11 Wire Connectors: One-piece, tin-plated crimp-on ring connector.

150-4.12 Insulated Joints: Insulating joints shall be dielectric unions, flanges, or couplings. The complete assembly shall have an ANSI rating equal to or higher than that of the joint and pipeline. All materials shall be resistant to the intended exposure, operating temperatures, and products in the pipeline**.**

Gaskets - 1/8” thick full-faced neoprene faced phenolic.

Insulating Sleeves - Full-length 1/32” thick Grade G-10 fiberglass epoxy.

Insulating Washers - 5/32” thick Grade G-10 fiberglass epoxy.

Washers - Same material as bolts, 1/8-inch thick.

150-4.13 Casing Insulator: Casing insulators shall be molded high-density polyethylene with plastic runners and shall consist of bolted segments, complete with stainless steel bolts for assembly.

150-4.14 Casing Seals: Casing seals shall be flexible molded rubber seals and shall be supplied complete with two stainless bands for sealing. Split seals are not acceptable.

150-4.15 Wall Seals: Wall seals shall be interlocking links of molded synthetic rubber. The links are to be connected together with stainless steel bolts. The wall seal shall be sized for the pipe size and type and the wall hole.

150-4.16 Pipe Backfill: Imported backfill placed around the pipes shall be a good quality sand backfill with a minimum resistivity of 5,000 ohm-cm, a minimum pH of 6.0, a maximum chloride concentration of 300 ppm and a maximum sulfate concentration of 1,000 ppm.

150-4.17 Coatings for Buried Insulating Flanges: Coat buried insulating flanges with Trenton Wax Tape #1 by The Trenton Corporation or approved equal.

150-5.0 Installation:

150-5.01 General: Installation of the specified corrosion control materials shall conform to the guidelines as set forth herein. Any changes in design or method of installation of any item as specified shall be reviewed and approved by the City Engineer prior to installation.

150-5.02 Pipe Joint Bonding: Bond all buried non-welded, rubber gasket joints, mechanical joints and fusion-bonded epoxy coated flanges for continuity. Install one or two joint bond wire assemblies at each joint that requires bonding, in accordance with Table 150-5, of this document and the following:

Pipe Size	No. Of Bond Wires Required
Smaller than 20-in diameter	1
20-inch diameter & larger	2

The electrical connection of all wires to pipes and fittings shall be performed using the exothermic welding process.

150-5.03 Exothermic Welds: Exothermic weld connections shall be installed in accordance with Standard Plan CP-16. Coating materials shall be removed from the surface over an area just sufficient to allow proper searing of the graphite weld mold to the pipe surface. The coating shall be entirely removed in the area of the actual weld by using a sanding wheel or metal file. White metal shall be achieved free from resin films. After the weld is complete, strike the weld with a hammer using a moderate amount of force. Welds that dislodge from the pipe surface shall be replaced. Care shall be taken to prevent damage to the wires. All rough edges of the weld and slag shall be removed during this structural test.

150-5.04 Anode Storage and Handling: Store all prepackaged anodes off the ground and keep them dry at all times. Protect them against weather, condensation, and

mechanical damage. Immediately remove all wet or mechanically damaged prepackaged anodes from the site. Prepackaged anodes shall be handled with care to prevent loss of backfill material. Anodes shall not be lifted or installed by the lead wire.

150-5.05 Galvanic Anode Installation: Remove the plastic or heavy paper bag used for shipping. The cloth bag shall remain around the anode. Care shall be exercised during installation to prevent damage to the cloth bag and loss of backfill material. After placing anodes in the trench, native soil, free of rocks and other foreign objects shall be placed around the anode to a minimum cover of one foot above the anode. Anode shall then be flooded with 5 gallons of fresh water. The remainder to the trench shall then be backfilled with native soil.

Install galvanic anode 1 foot below the pipe invert and at a minimum distance of 3 feet from the pipeline, valve or fitting. Provide a minimum anode spacing of 5 feet from other unprotected pipelines. Install anodes at intervals determined by the cathodic protection design.

Valves and Fittings For Non-Metallic Pipe: Each buried ductile/cast iron and steel fitting, and valve used in conjunction with nonmetallic pipe shall be cathodically protected with zinc anodes (soil resistivity < 1000 ohm-cm) or magnesium anodes (soil resistivity $\geq$ 1000 ohm-cm). Where two or more metallic fittings are adjacent to each other, they can be bonded together for the purposes of cathodic protection as shown on the Standard Drawings.

Anode connections to ductile/cast iron and steel fittings and valves shall be made by the exothermic weld method. Any damage to the interior coating shall be repaired in accordance with the manufacturer's recommendations.

150-5.06 Wires: Provide a minimum cover of 30 inches over all cables. Use care during installation to avoid punctures, cuts and similar damage to the insulation. Replace entire cable run where any damage to insulation occurs. Yellow caution tape shall be placed a minimum of 6 inches above any buried cables.

150-5.07 Test Station Installation: Test stations shall be installed as shown on the Standard Drawings. A concrete collar shall be set flush with the top of curb or finish grade in paved areas and two inches above grade in landscaped areas. The terminal end of each cable shall be identified with permanent cable markers as shown in the Standard Drawings. The locations for the test stations shall be as specified in the cathodic protection design.

Provide a minimum of 18 inches of slack for each cable in each test station. Sufficient slack shall be provided to allow removal of the terminal box from the test station without disconnecting any of the cables.

150-5.08 Insulating Flanged Joints: All insulating components of the insulating flanged gasket set shall be cleaned of all dirt, grease oil and other foreign materials immediately prior to assembly. Bolt holes in mating flanges shall be properly aligned at the time bolts and insulating sleeves are inserted to prevent damage to the insulation. After flanged bolts have been tightened, each insulating washer shall be inspected for cracks or other damage. All damaged washers shall be replaced. After assembly, resistance between each bolt and flange shall be measured with an approved Digital Low Resistance Ohmmeter (DLRO) and the minimum resistance shall be 50,000 ohms. Where the insulating joint is assembled in the shop and shipped as a unit, resistance shall be measured in the shop between the flanges and between each bolt and flange and shall meet the above requirements. All below grade insulating joints shall be coated as specified above.

150-5.09 Casing Insulator and Seals: At all locations where water system piping is cased with metal casing, casing insulators and end seals shall be installed. Type and spacing of insulators required shall be at manufacturer's written recommendations and depend on type and size of casing and carrier pipe.

150-6.0 Testing:

150-6.01 General: The Contractor shall furnish all necessary equipment, material, and qualified personnel required to perform all tests described herein.

NOTE: Qualified personnel are California Registered Corrosion Engineers and/or those who possess a valid current NACE certification who shall furnish qualification documentations upon request by the City Engineer. All those who do not meet any of the required qualifications shall refrain from performing any kind of work under this requirement in the City of Brentwood.

All electronic test equipment such as multimeters, DLRO, etc., shall be calibrated. A Certificate of Calibration shall be submitted together with the report and shall be current within one year.

All test results shall be submitted to the City using the form, “Cathodic Protection System Survey, Table 150-8”.

150-6.02 Electrical Continuity Testing: Conduct continuity testing on all buried joints that are required to be bonded both before backfilling and after backfilling.

150-6.03 Insulation Joints and Casings: The Contractor shall test each insulated joint and cased crossing. All damaged or defective insulation parts shall be replaced and retested.

All electrical shorts to the casing shall be cleared and retested. Records shall be made of all insulated joints and cased crossing test and submitted for approval.

150-6.04 Test Stations: The Contractor shall test all test leads to ensure they were installed in accordance with the Specifications. All defective test leads shall be repaired and/or replaced and retested. Records shall be made of all test stations tested and submitted for approval.

150-6.05 Cathodic Protection System: The Contractor shall test all cathodically protected pipelines to ensure that the protection levels are within the most recent NACE RPO 169-2002 Standards. Records shall be made of all anode current output and pipe to-soil potential measurements performed and submitted for approval.

150-6.06 Acceptance: All tests performed shall be reviewed and approved by the City Engineer before the corrosion control work is accepted. The City reserves the right to spot-check any or all tests performed by the Contractor. All construction defects must be repaired and retested before the final acceptance is made. The Contractor at no additional cost to the City shall retest all unacceptable tests.

***Important:* Prior to paving, all tests shall be performed and corrections made to the satisfaction of the City Engineer.**

Table 150-8
Cathodic Protection System Survey

Testing Agency: _____ **Date:** _____
Engineer/Technician: _____ **Sheet No.:** _____
NACE Certification No.: _____ **Project Name:** _____
Location: _____ **Project No.:** _____

No.	Location/Station #	Structure / Test Point	Structure-to-Soil Potential			Polarized Potential (Off-Static) (-mV)	Anode Current Output (mA)	Remarks
			Static (-mV)	Anode Connected (On) (-mV)	Anode Temporarily Disconnected (Instant Off) (-mV)			

Comments/Sketch :

SECTION 160

FIBER OPTIC FACILITIES

160-1.0 General: The premise of the fiber optic design is that in the future when the fiber optic plant is pulled, the conversion from coaxial (C) to fiber optics (F) will take place at the Node Vault (Vn). The Vn vault is the only junction where the coaxial conduit (C) and fiber optic conduit (F) will interconnect. After that, the fiber conduit (F) goes into the Fiber Splice Vault (Vf) and the coaxial conduit (C) goes into the Service Vault (Vs). (See attached sheet depicting the functions for each vault).

160-2.0 Material:

160-2.01 Conduit Material:

	Quantity and Diameter Size	Material of Conduit
Fiber Optic Trunk Line (T): "Fiber Optic Master Ring" carries all optical fibers throughout the trunk line system from the point(s) of connection to the node vaults (Vn)	2 – 4" Φ	PVC - Schedule 40
Fiber Optic Main Line (F): Carries all optical fibers from node vaults (Vn) to fiber optic splice boxes (Vf)	1 – 4" Φ	PVC - Schedule 40
Coaxial Distribution (C): Carries distribution cables from node vaults (Vn) to service vaults (Vs).	2 – 2" Φ	PVC - Schedule 40 (color orange)
Services (S): Carries service drop cables from service vaults (Vs) to served residences.	2 – 1-1/4" Φ	PVC - Schedule 40 (color orange)

160-2.02 Vault Material:

1. Vault for Fiber Optic Node (Vn)

   A. Minimum size: 3'(W) x 5'(L) x 4'-6" (D)

B. Type and material of box: concrete, Pac Bell – 3660 standard

C. Type and material of lid: Utility Vault or equal, H10 loading, torsion assist, adjustable frame style, penta head bolts, diamond, and painted black

D. Marking of lid: "City of Brentwood"

E. Conduit Entrance into Box: from the side

F. Maximum number of terminations: 12 (4 - 4" Φ, plus 4 - 2" Φ pairs)

G. Only the fiber optic trunk line (T), main line (F) and/or coaxial conduits (C) shall interconnect this node vault.

2. Vault for Splices of Fiber Optic Main (Vf)

A. Minimum size: 30" (W) x 48" (L) x 34" (D)

B. Type and material of box: reinforced concrete

C. Type and material of lid: reinforced concrete, single lid – type "D"

D. Marking of lid: "City of Brentwood"

E. Acceptable Manufacturer: Christy B48 Utility Box, or equal, with two extensions

F. Maximum number of terminations: 4 - 4" Φ

G. Conduit Entrance into Box: from the side

H. After installation of box and conduits, pour concrete sump.

I. Only the fiber optic trunk line (T) and/or main line (F) enters and exits this splice vault.

3. Vault for Services (Vs)

A. Minimum size: 24"(W) x 36"(L) x 34"(D)

B. Type and material of box: reinforced concrete

C. Type and material of lid: reinforced concrete, single lid – type "D"

D. Marking of lid: "City of Brentwood"

E. Acceptable Manufacturer: Christy B40 Utility Box, or equal, with two extensions

F. Maximum number of terminations: 20 (4 - 2" Φ pairs, plus 6 - 1 ¼ " Φ pairs)

G. Conduit Entrance into Box: from the side

H. Only the coaxial conduit (C) and services (S) shall interconnect at this service vault.

160-3.0 Conduit Placement:

160-3.01 All Conduits: Sweep minimum radius: 24" horizontal or vertical

A pull rope shall be installed in all conduits that are to receive future cables. A pull rope shall be nylon or polypropylene with a minimum tensile strength of 500 pounds. At least 2 feet of pull rope shall be doubled back into the conduit at each termination. Prior to acceptance by the City of Brentwood, all fiber optic and coaxial conduits shall be cleaned with a mandrel.

160-3.02 Fiber Optic Trunk Line (T), Fiber Optic Main Line (M) and Distribution Conduits (C): No cable segment between enclosures may include more than 360 degrees of total bend, including an allowance of 90 degrees for the transition into each enclosure. In other words, there may no more than two 90-degree bends in the conduit placed in the street, not counting the transition bends into the vault at each end of the segment.

Maximum length of conduit shall be 400' for runs with bends greater than 90°, but less than 180° (excluding the bends in and out of vaults).

Maximum length of conduit shall be 500' for runs with bends greater than 0°, but less than 90° (excluding the bends in and out of vaults).

Maximum length of conduit shall be 600' for straight runs (excluding the bends in and out of vaults).

Terminations into node vaults shall be gradually swept (15 to 30 degree bends) to the elevation where the conduit enters through the side of the vault.

160-3.03 Service Conduits (S): Service conduits extend between the service vault and the termination panel at each dwelling. Two service conduits must extend between each service vault and each dwelling served from that vault.80% of such conduits must be no greater than 120 feet in length and no conduit may be greater than 180 feet in length.

In order to limit cable tension during installation, no service conduit may include more than 270 degrees of bend, including the 90-degree sweep up into the service panel at the dwelling and an allowance of 90 degrees for the sweep transition out of the service vault. Where bending in excess of 270 degrees is required, intervening service vaults must be employed.

Each service shall terminate, without gap, in a separate prewired box in wall of dwelling. The prewire boxes shall be Multilink part number RNSB-69 or equal, mounted for access from outside the dwelling. Supply separate #10 copper ground wire from the UFER common building electrode to each box. A dedicated 20 amp circuit shall be located adjacent to the distribution hub and installed on the inside wall of the structure.

160-4.0 Vault Placement:

160-4.01 Node Vaults (Vn): Every new subdivision shall contain at least one node vault. These vaults shall be located near the entrance points of subdivisions in landscape parcels, so that the nodes can also serve homes in existing or future adjacent subdivisions.

The total length of the distribution conduit (C) between the node vault and the most distance served home shall not exceed 2400 feet. If the distribution run is split to create multiple distribution branches, then the maximum length must be shortened by 150 feet per branch circuit.

No more than four distribution conduits may originate from any give node vault.

No more than 300 homes may be served from any node vault.

120/240-volt electric power (at least 5 kW) must be available within 200 feet of the node vault location and must not require boring of streets to access.

Natural gas must be available within 200 feet of the node vault location and must

not require boring of streets to access.

160-4.02 Fiber Splice Vaults (Vf): Fiber splice vaults shall be placed where each road leaves the subdivision and shall extend to the Fiber Optic Master Ring, if applicable. If the trunk line of the Fiber Optic Master Ring is existing, interconnection of the trunk line to the vault is required.

Fiber splice vaults shall be placed as required to meet the maximum requirements for fiber optic trunk line (T) and main line (F) conduit lengths and total bend angle.

Vaults must also be placed such that they can easily be accessed for service.

160-4.03 Service Vaults (Vs): Service vaults are placed at locations where the two distribution conduits intersect pairs of drop conduits serving several homes. Wherever possible, each service vault should provide service to 2, 4, or 6 homes, with a strong preference for serving 4 home groups. It is occasionally permissible to serve 3 homes from a tap location, but serving 5 homes is not allowed.

In addition of providing a transition between distribution and service conduits, service vaults must be provided at every point where the service is stubbed-off for future expansion.

Finally, additional service vaults may be required to limit pulling tension on cables in accordance with the criteria on distribution conduit placement.

160-5.0 Right-of-Way: The developer shall dedicate a five (5) feet public utility easement (PUE) beyond the Right-of-Way, which is typically 10 feet from face of curb. This easement shall also be shown on the Final Map and Joint Trench Plans.

SECTION 170

STREET AND PAVEMENT RESTORATION REGULATIONS

170-1.0 Moratorium: Permission to excavate in newly surfaced streets will not be granted for three years after completion of street surfacing. For those streets with chip seal or slurry seal coatings, the moratorium shall be for 36 months. Utilities shall determine alternate methods of making necessary repairs to avoid excavating in newly resurfaced streets. Exceptions to the above are as follow:

1. Emergency which endangers life or property.

2. Interruption of essential utility service.

3. Work that is mandated by City, State or Federal legislation.

170-2.0 General: The following regulations pertain to street excavations:

170-2.01 Permits:

1. Except in extreme emergency, encroachment permits must be taken out in advance of excavation work. An extreme emergency is considered to exist only when life or property is endangered or when an essential utility service is interrupted during weekends, holidays, or outside the hours of 8:30 a.m. and 4:30 p.m. of normal working days.

2. A plan showing the approximate location of excavation must be provided. Record Drawings shall be submitted prior to acceptance of the project.

3. Permits for street opening shall be valid for a maximum of six (6) months. The estimated date of commencement and completion of work shall be indicated in all permits. Conflicts in the schedules of work under two or more permits shall be resolved by the parties involved.

4. As a condition of the permit to excavate, the applicant must have been provided an inquiry identification number by a regional notification center (USA) pursuant to Section 4216, Chapter 1153 of the California State Law.

5. Permit Inspector, telephone number (925) 516-5420, shall be notified 24 hours in advance of any work. (A CONTROL NUMBER WILL BE PROVIDED FOR EACH NOTIFICATION BY THE PERMIT INSPECTOR.)

170-3.0 Excavation:

1. All excavated material not suitable for backfill shall be removed from the job site within twenty-four (24) hours. Excavated material suitable for backfill may be stored on the job site for a maximum of five (5) working days. The suitable backfill material shall be stored in a location outside the public right of way, shall not occupy any more space than the permit allows and shall be completely prevented from blowing, washing, or being thrown about at all times.

2. No trench shall be opened on any street, which is not backfilled at the end of the day. With prior approval of the permit inspector, the trench may be left open at the end of the day with adequate safety precautions for vehicular and pedestrian traffic.

170-4.0 Backfill:

1. Trenches on existing streets shall use Class II A.B., free from organic matter and other deleterious substances, and shall be of such nature that it can be compacted readily under watering and rolling to form a firm, stable base. Compaction of backfill shall be in accordance with City of Brentwood Standard Plan ST-25a and these Specifications.

2. Where undermining has occurred, remove existing pavement as directed by the City Engineer to compact backfill.

3. Certificates shall be obtained from an independent testing laboratory verifying that compaction meets requirements. The number of tests will be specified by the City Engineer or his inspector. The intent of this test is to assure that pavement is properly restored. Tests will generally be required on all excavations. The number of tests required at the inspector's option will increase if results are poor and decrease if good compaction is consistently obtained.

170-5.0 Paving:

1. Trenches shall be paved. Sawcutting of the existing pavement shall be in neat straight lines. To allow for proper placement of the new pavement section, damaged pavement outside of the original trench cut lines shall be removed by cutting in lines perpendicular to or parallel to the original trench lines. No diagonal cuts are to be made. Undamaged pavement of three (3) feet or less between two damaged areas shall also be removed.

2. Pavement shall be restored using the "T" Section. For trenches in moratorium streets parallel to the centerline of the street, the entire lane shall be key-cut one and one-half inches (1-1/2") deep and repaved with asphalt concrete. For trenches in moratorium streets with chip seal or slurry seal coatings, the entire lane shall be resurfaced with these coatings.

3. Grind down the existing asphalt pavement to a minimum of 2" for a distance of 1' from the limits of the trench. Trench shall be paved within 2" of the finished surface and compacted. The final lift shall be the top 2" to the finished surface with a smooth surface with the existing pavement. Paving shall be slurry-seal coated twenty-four (24) hours after the top lift paving, the trench paving and the 1' outside the trench.

4. Trenches in concrete streets shall be paved with concrete pavement. The thickness of the new pavement shall be equal to the thickness of the existing pavement with the minimum thickness to be six (6) inches in the roadway. Doweling and color matching is required.

5. Trenches in major and minor thoroughfares with asphalt wearing surfaces shall be paved with not less than five and one-half inches (5-1/2") of asphalt concrete wearing surface.

6. Trenches in Collector Street and cul-de-sac streets shall be paved with a minimum of two inches (2") asphalt concrete wearing surface on a minimum of two inches (2") asphalt concrete.

7. Pavement shall be restored within fourteen (14) days from the time the trench is backfilled. For minor excavations such as service installations, the pavement shall be restored within two (2) working days from the time the trench is backfilled. The asphalt concrete wearing surface shall be placed

within two (2) working days after placement of asphalt concrete base, weather permitting.

8. When roadway widening is required, the existing pavement surface must be grinded to a minimum depth of 1-1/2” and an overlay shall be required over the entire street section.

9. Prior to placing asphalt concrete, the existing asphalt concrete shall have a vertical face so that new A.C. paving can be butt joined. No feathering of new paving to existing paving is allowed. The vertical faces shall be tack coated. In moratorium streets, placement of the final one and one-half inches of A.C. wearing surface shall be done by a paving machine or spreader box in order to eliminate the uneven, wash-board effect that results from hand spreading. Asphalt concrete shall be delivered and compacted in accordance with the Standard Specifications.

10. Asphalt pavement shall be compacted to obtain a minimum dry compaction of ninety-five percent (95%) (ASTM 1557). The asphalt concrete wearing surface will be smooth enough so that there is no irregularity greater than five-sixteenths of an inch (5/16") in ten feet (10') in any direction.

11. When ordered by the City Engineer, steel plates shall be used to facilitate traffic flow and to protect the excavation until finished pavement is restored. Steel plates used to bridge a street opening shall be ramped to the elevation of the adjacent pavement and secured against movement in any direction. Temporary ramps shall be constructed of asphalt and shall have a gradual slope. On all other streets, temporary asphalt cutback is permitted.

12. Utility trenches shall be color coded with a four (4) inch painted mark at the beginning and end of each trench at each intersection when paving is completed for inspection of record drawings. The color assigned to each franchised utility is as follows:

PG&E Electric (red)	Street Repair (dark green)
Pacific Bell (orange)	PG&E Gas (yellow)
City Water (blue)	Cablevision (orange)
City Non-Potable Water (purple)	City Fiber Optics (orange)
City Sewer (green)	City Storm Drain (white)

12. Wheelchair ramps shall be constructed where any portion of the curb at a legal pedestrian crosswalk or any portion of the sidewalk in immediate contact with such curb is removed; except where there is an existing wheelchair ramp in the crosswalk or where there is a sub-sidewalk basement behind the crosswalk.

170-6.0 Defects:

1. Depressed trench pavement shall be repaired as follows to 12 inches outside of perimeter depression:

    a. Wearing surface; defects remove and restore wearing surface.

    b. Major defects; excavate, remove and restore surface and base. The severity of the defect will be determined by the Permit Inspector.

2. Work not complying with the above requirements will be rejected, removed and redone to the satisfaction of the City Engineer.

3. Utilities shall be responsible to correct trench defects until such time as the street is resurfaced.

170-7.0 Miscellaneous:

1. Street excavation signs shall be installed at the project site at least two (2) days in advance or any construction work lasting five (5) days or more. Signs must state name of utility company and Contractor, twenty-four (24) hour telephone number, and type of construction.

2. Any violation of the above regulation may result in the revocation of the encroachment permit and/or be subject to a police citation or fine.

SECTION 200

IRRIGATION AND LANDSCAPE FACILITIES

The following supercedes in its entirety the like numbered section of the Standard Specifications.

200-1.0 Irrigation:

200-1.01 General:

200-1.01A Scope of Work: This section covers the furnishing and installation of complete irrigation systems as shown on the Improvement Plans; connection to existing water supply lines in street, related to trenching and backfilling; electrical connections to automatic irrigation controller and the guarantee.

200-1.01B Purpose of Specifications: The purpose of this section of the City Standard Specifications is to accomplish the work of installing a sprinkler system, which will operate in an efficient and satisfactory manner according to the workmanlike standard established for sprinkler operation. Notwithstanding the fact that these City Standard Specifications may be deficient in setting forth a complete, detailed description, it is the responsibility of the Contractor to install said irrigation system in such a manner that it shall operate efficiently in accordance with the State Water Conservation Act AB 1881 and City Ordinance of implementing the same.

200-1.01C Improvement Plans: The irrigation Improvement Plan is diagrammatic and is not intended to show exact locations of piping and valves. Locate these items as closely as possible to related curbs and edges of paving but not closer than 12”. Pipelines shown parallel in the Improvement Plans may be installed in one trench.

Sprinkler heads shall be shown accurately and shall be installed as indicated by the center of the irrigation drawing symbol on the plans.

Locations of multi-outlet drip emitters shall be shown in the approximate location intended and shall be installed as indicated in the Improvement Plans detail.

Discrepancies in dimensions or sizes of areas to be irrigated shall be brought to the attention of the City Inspector before installation.

200-1.01D Damage to Property: Prior to the start of construction, the City and Contractor shall perform an irrigation test to determine that all existing equipment is working properly. If deficiencies are determined at this stage, they shall be repaired by the City and shall be noted by both the City and Contractor. At the final inspection, it is the responsibility of the Contractor to repair any deficiencies incurred during the course of construction as determined by the City.

Any property, including existing buildings, equipment, piping, pipe covering, sewers, sidewalks, landscaping, etc., damaged by the Contractor during the course of his work, shall be replaced or repaired by the Contractor in a manner satisfactory to the City Inspector and at the Contractor's expense before final payment will be made.

200-1.01E Damage by Leaks: The Contractor shall be responsible for damages to the ground, walks, roads, buildings, piping systems, electrical systems and their equipment and contents caused by leaks in the piping systems being installed or having been installed by him. He/she shall repair at his own expense all damages caused by him to the satisfaction of the City.

200-1.01F Inspections: The Contractor is required to notify the City at least 48 hours in advance of the time inspection and/or direction.

200-1.01G Verification of Dimensions: Before proceeding with any work, the Contractor shall carefully check and verify all dimensions and report any variations to the City.

200-1.01H Record Drawings: Record Drawings shall serve as work progress sheets. The Contractor shall make neat and legible annotations daily as the work proceeds, showing the work as actually installed, noting changes from the originally submitted Improvement Plans. These Improvement Plans shall be available at all times for inspection and shall be kept on the job site.

The location of the following items shall be measured from two (2) permanent points of reference, building corners, sidewalk, road intersections, etc.:

- Connection to existing water lines;
- Connections to existing electrical power/Controller Shut-off;
- Gate valves;
- Routing of sprinkler pressure lines (dimension max. 100 feet along routing);
- Sprinkler control and master valves;
- Routing of control wiring and location of extra wires;

- Quick coupling valves;
- Flow Sensors;
- Other related equipment as directed by the City;
- Record all utility locations revealed by construction.

On or before the date of the final inspection, the Contractor shall deliver the corrected and completed reproducible Record Drawings to the City. Delivery of reproducible Record Drawings shall not relieve the Contractor the responsibility of furnishing required information that may be omitted from the "As-built".

******USA Advisory only – exact locations are the responsibility of Contractor******

200-1.01I Controller Charts: The City shall approve "As-built Improvement Plans" before controller charts are prepared.

Two (2) controller charts shall be provided for each installed controller showing the area regulated by it. The charts shall be the reduced drawing of the actual "As-built" system, color-coded indicating the area of coverage for each station, on a paper size big enough to fit through the controller door. Any unreadable and illegible charts shall not be accepted.

These charts shall be completed and approved prior to final inspection of the irrigation system. Once completed and approved, the chart shall be hermetically sealed between two pieces of plastic, each piece being a minimum of 10 mils.

200-1.02 Materials: Wherever a name and number specify a material, such specification is to facilitate a description and establish quality. Unless two or more brand names are listed, it shall be construed that the words "or approved equal" shall follow the name. No substitution shall be permitted unless such substitution has been submitted for approval to the City within 10 days after the contract has been awarded. Six (6) copies of descriptive literature must be furnished for any materials submitted as equal substitutes.

200-1.02A Plastic Pipe:

1. Pressure Main Lines: Pipe sizes of 2-1/2 inch or smaller shall be Schedule 40 PVC, Polyvinyl-Chloride Solvent Weld Pipe, Simpson, Pacific Western or ASC; pipe sizes larger than 2-1/2 inch shall be Class 315 PVC Polyvinyl Chloride Solvent Weld Pipe, Simpson, Pacific Western or ASC.

2. Lateral Lines: Schedule 40, Polyvinyl-Chloride Solvent Weld Pipe, Simpson, Pacific Western or ASC.

3. Slip Fittings: PVC Schedule 40 on lateral lines, Schedule 80 on main lines. Same material type as pipe, solvent cement-welded slip socket, unless otherwise indicated shall be either GSR or LASCO.

4. Threaded Fittings: Schedule 80 PVC, all fittings same IPS as head. Threaded fittings by LASCO or Spears.

5. Plastic Pipe Solvent: Type and make as recommended by the pipe manufacturer and appropriate to the pipe type. Clean all PVC joints with cleaner then prime with "IPS weld-on #P-70" as recommended by manufacturer.

6. Plastic Pipe Marking: All pipes shall be continuously and permanently marked with the following information: Manufacturer's name, pipe size, IPS size (Schedule No.), type of material and code number.

200-1.02B Manufacturing Guarantee: All pipes shall be guaranteed by the manufacturer to be free of manufacturing defects in material or workmanship and shall further guarantee that all pipes had passed, or will pass, the Anhydrous Acetone Immersion Test.

Note: Manufacturer's liability may be limited to replacement or credit for defective pipe if the use has been within the limits of pressure and temperatures.

200-1.02C Risers:

1. Plastic: Schedule 80 PVC or as shown on Improvement Plans.

2. Metal: As shown on Improvement Plans.

200-1.02D Quick Coupling Valves: At grade on swing joint riser as noted on Improvement Plans and as per City of Brentwood Standard Plans and Specifications.

200-1.02E Valve Boxes:

1. For Remote Control Valves: Shall be fiberglass or plastic in shrub and groundcover areas. Concrete boxes with metal locking lids in all traffic areas.

No boxes in turf areas unless approved by Parks & Recreations Director. Size per plan or as required to accommodate valves, and all fittings as shown on detail drawings as per City of Brentwood Standard Plans and Specification; heat branded with station numbers; with stainless steel bolts and washers. All valves, ball valves and unions need to fit into the box.

2. For Gate Valves: Green fiberglass or plastic 10-inch diameter box with locking lid (or larger, as per plans). See Standard Plan W-13.

3. For Quick Coupling Valve: Green fiberglass or plastic 10-inch diameter round box with locking lid.

4. Green Rectangular Fiberglass or PVC Boxes on all master valves and flow sensors.

200-1.02F Sprinkler Heads: As indicated on Standard Plan I-1.

200-1.02G Automatic Sprinkler Controller: As described on Improvement Plans or approved equal, UL rated. Controller shall be electrically operated 24-volt AC output. Each station shall be independently variable as per the manufacturer's specification. Changes made in individual settings shall not affect other time settings.

The controller shall operate automatically, semi-automatically, manually or remotely.

All controllers, which require more than 6 stations, shall conform to the requirements of the City of Brentwood's central irrigation system.

200-1.02H Remote Control Valves: Globe pattern as noted on Improvement Plans. Diaphragm type actuated by means of a 24-volt solenoid valve attached directly to the sprinkler valve body.

Solenoid coils shall be molded waterproof construction and capable of normal operation in any position.

Valves shall be equipped with positive shut-off, capable of adjusting flow through the valve. The valve shall be normally closed until energized, and shall automatically close if electric powers fail. Valves shall be capable of manual operation without control wires of controller being installed.

See Standard Plan I-14.

200-1.02I Control Wiring: Shall be single conductor, solid copper type UF-AWG, 600-volt rated, permanently marked as to manufacturer, size and type:

1. Pilot or Control Wire: AWG 14-1; Black – install a minimum of one extra control wire for each 6 stations; loop into valve boxes and label as "spare."

2. Common Wire: AWG 12-1; Separate solid color (other than black) for each controller.

3. Spare Wire: One spare common wire shall follow the entire main line and shall be looped into each remote control valve box. There shall be spare control wires installed at a ration of one wire per six valves. Spare wires shall be looped into each remote control valve box.

4. Mainline Locator Wire: One 10 gauge wire must be taped to the mainline at every 10 feet for the full length of the mainline and looped into each gate valve box. See Standard Plan W-17. Stub beginning of wire into controller.

5. Connectors: Scotch DBY, or approved equal. Splices must be buried. All spliced connectors must be in a 9" round valve box, set at grade.

6. Markers: Panduit Insta-Code PCM Series, or approved equal.

200-1.02J Gate Valves: Resilient seated gate with 2" shut off hex head. As noted in the Improvement Plans, installed with valve can.

200-1.02K Check Valves: PVC Swing check as manufactured by King Bros., Valcon or approved equal.

200-1.02L Ball Valves: Brass ball valves. Full ported resilient seated.

200-1.02M Backflow Unit: See Standard Plans W-8, W-8a and W-9. Install on concrete pad with locking enclosure.

200-1.02N Backflow Enclosure: See Standard Plans I-1 and I-5. Stainless steel, one-piece enclosure on concrete pad per manufacturer's detail drawings or approved equal.

200-1.03 Construction:

200-1.03A Excavation and Backfill: The contractor shall do all necessary excavation for the installation of all work included in the contract. After the work has been installed, inspected and approved, all excavations shall be backfilled with sand or Class II aggregate base material to 12 inches above crown at pipe and tamped. Then, fill with earth and tamped to a 95% relative compaction in planting areas. All trenches shall be left flush with adjoining grade in a firm unyielding condition. Contractor shall correct any subsequent settlement of trench.

Mechanical trench diggers used on the site shall be of an approved type with straight sides. Trenches shall be no wider at any point than is necessary to lay the pipe and to obtain proper compaction.

No trenches shall be left open at the end of the day. Open trenches shall be protected with ¾" plywood, lighted barricades and caution tape.

200-1.03B General Requirements for Piping: Pipelines shall be installed in the locations and of the sizes shown on the Improvement Plans and these City Standard Specifications. All materials and workmanship shall conform to the Improvement Plans and these City Standard Specifications.

All pipes shall be assembled free from dirt and scale, shall be reamed, and burrs removed. All pipes shall be laid with markings up.

Before the connection of the lateral pipes and with the control valves in place, the main line shall be flushed out and tested for leaks.

Flush out each section of lateral pipe before sprinkler heads are attached.

200-1.03C Piping Depth: See Standard Plan I-2.

1. Main: 18" of cover for 8" or smaller pop-ups; for 8" and larger pop-ups, cover shall be 24".

2. Laterals: 12-inch of cover.

The bottom of the trench shall be free of rocks, clods and other sharp-edged objects.

No pipeline shall be installed directly over another pipeline in the same trench. There shall be a 6" horizontal separation between pipes.

Piping under existing pavement shall be done by jacking, boring or hydraulic driving, but where any cutting or breaking of pavement is necessary; it shall be done and replaced by this Contractor as part of the contract cost. Permission to cut or break pavement must be obtained from the City Engineer. No hydraulic driving will be permitted under asphaltic concrete paving.

See Standard Plan ST-25, ST-25a and ST-25b for backfilling of trench.

200-1.03D Plastic Pipes and Fittings: Install main line and lateral line in locations shown on Improvement Plans. Discrepancies shall be brought to the attention of the City Engineer prior to trenching.

1. Handling: Exercise care in handling loading, unloading, and storing plastic pipe and fittings. Store pipes and fittings under a covered area before using or transporting on a vehicle. The vehicle shall have a bed long enough to allow the pipe to lay flat to avoid undue bending or concentrated external load.

   Dented or damaged pipes shall be repaired by cutting out the dented or damaged section and rejoining them with a coupling.

2. Jointing: Apply "IPS WELD-ON P-70" primer prior to applying solvent cement. Use only the solvent recommended by the manufacturer to make plastic pipe joints. Solvent welded joints should be given at least 15 minutes set-up curing time before moving or handling and 24 hours curing time before water is placed in PVC Pipe.

   Center-load pipe with small amount of backfill to prevent arching and slipping under pressure.

   Plastic to steel connections: Work with the steel connection first. Use a non-hardening pipe dope and 3 wraps of Teflon tape on all threaded plastic to steel joints. Apply a light wrench pressure on these joints.

3. Thrust Blocks: As per 130-1.02G, "Thrust Blocks," of the City Standard Specifications. Installation shall be approved before backfilling.

200-1.03E Check Valves and Ball Valves: Shall be installed at all remote control valves as shown on Standard Plan I-14.

200-1.03F Remote Control Valves: As specified on the Improvement Plans. Connect to automatic controllers in the operating sequence indicated on the Improvement Plans by numbers. Provide and install one (1) control valve box for each electric control valve.

200-1.03G Quick Coupling Valves: Top of the valve shall be 3 inches below the inside of the 10-inch diameter round box lid. Box shall be flush with the finish grade. See Standard Plan I-15.

200-1.03H Sprinkler Heads: Install as noted on Improvement. Final location shall be flush with grade and min. 12 inches clear of walkways, curbs or headers to facilitate edging. All sprinkler heads of the same type shall be of the same manufacturer. Heads in turf should be within 12" of concrete surfaces.

200-1.03I Electric Services: As per Improvement Plans.

200-1.03J Service: The Contractor shall coordinate with the Pacific Gas and Electric (PG&E) Company for any necessary service modification. Any fees and costs required by the utility company shall be the responsibility of the Contractor.

The service cabinet shall be type Milbank West CP3B11115A Stainless Steel. Service shall have a 100-ampere, 2P, main circuit breaker with a 50-ampere, 1P, signal circuit breaker, a 30-ampere, 1P, lighting circuit breaker, a 15-ampere, 1P, illuminated street name sign circuit breaker, a 30-ampere, 1P, "spare" circuit breaker. A 30-ampere, 125 volt twist lock receptacle shall be mounted in the dead-front panel for the convenience receptacle.

200-1.03K Controller and Control Wiring: As per Standard Plans I-6, I-6a and other requirements as noted in the approved plans.

1. Securely mount controller as directed by the manufacturer. Complete all electrical connections to controller.

2. Lay control wiring in trenches with main lines and tape every 10 feet into a common bundle.

3. At valves, both wires shall be brought into the valve box and shall have an excess loop of 24 inches before being spliced to the solenoid pigtails.

4. Place labels on control wiring at all terminus points indicating controller and valve number and station.

5. Provide a minimum of four (4) extra valve stations on each controller for future use.

200-1.03L Testing Main Lines: Scheduled testing shall require a 48-hour advance notice.

Before testing, after the valves have been installed, fill water line with water for at least 24 hours. Test all main lines for leaks at full pressure of 150 psi for a period of two hours with couplings exposed and pipe sections center-loaded. Pressure gauges shall be installed at the end of the main line being tested. Correct all leaks and retest until acceptance by the City.

Note: Backflow valve shall be installed and tested by a City-approved tester prior to filling irrigation main and lateral.

200-1.03M Testing Lateral Lines: After pipe and risers have been installed, and prior to head and swing joints being installed, test all lateral lines for at least one hour at 75 psi. Repair all leaks and retest until acceptance by the City.

200-1.03N Closing in Uninspected Work: The Contractor shall not allow nor cause any of his work to be covered or enclosed until it has been inspected, tested and approved by the City.

200-1.03O Coverage Test for Sprinklers: The City shall verify proper irrigation coverage prior to any plant material being installed.

200-1.03P Final Inspection: Final inspection requires a 7-day advance notice! Contractor shall check, clean and adjust all systems and present at the time of final inspection a thoroughly workable, clean, balanced irrigation system. Contractor shall operate system in its entirety in the presence of the City Inspector.

All sprinkler heads shall be adjusted for radius of arc of coverage. All Remote Control Valves shall be properly balanced. Contractor shall attach the approved controller chart(s) inside controller door (see Section 200-1.01I Controller Charts).

200-1.03Q Guarantee: The entire sprinkler system, including all work done under the project contract, shall be guaranteed against all defects and faults of material and workmanship for one year from date of acceptance by City Council without expense to the City. All materials used shall carry a manufacturer's guarantee for a minimum of one year.

Any settling of backfill trenches which may occur during the one year period after final acceptance shall be repaired by the Contractor to the satisfaction of and without expense to the City. This includes the complete restoration of all damaged planted areas, plants, paving or other improvements of any kind.

The "Guarantee for the Sprinkler Irrigation System" shall be made in accordance with the form on page 84. The Developer or Contractor shall fulfill the general conditions specified in the Improvement Plans and of this City Standard Specifications prior to the City's acceptance of the irrigation system.

The Guarantee form shall be retyped into the Contractor's letterhead and shall contain the following information:

1. Overtime letters will be submitted 48 hours prior to date of overtime, and will be approved by City.

2. All grading (rough) will be certified to be at +/- one tenth at area drains and inlets, and storm drains will be certified to be to proper elevations.

3. Any changes in storm drain locations or grade will be by architect, who designed plans and will be re-submitted prior to any work being done in field. All storm drain area and field inlet drain pipes shall to be installed as per the City of Brentwood Standard Plans and Specifications.

A copy of the completed Guarantee form shall be included in the operations and maintenance manual.

GUARANTEE FOR SPRINKLER IRRIGATION SYSTEM

We hereby guarantee that the sprinkler system we have furnished and installed is free from defects in materials and workmanship, and that work has been completed in accordance with the Drawings and Specifications, ordinary wear and tear and unusual abuse or neglect expected. We agree to repair or replace any defects in material or workmanship which may develop during the period of one year from date of acceptance by City Council and also to repair or replace any damage resulting from the repairing or replacing of such defects at no additional cost to the City. We shall make such repairs or replacements within 48 hours after receipt of written notice. In the event of our failure to make such repairs or replacements within 48 hours after receipt of written notice from the City, we authorize the City to proceed to have said repairs or replacements made at our expense and we will pay the costs and charges therefore upon demand.

PROJECT:_____

LOCATION:_____

SIGNED:_____

ADDRESS:_____

PHONE:_____

DATE OF ACCEPTANCE:_____

200-1.03R Certification: The manufacturers' representative shall certify all controllers and backflow units associated with the City's central irrigation system. This certification shall be provided to the City in writing before the start of the maintenance period.

200-1.04 Measurement: The backflow units, controllers, sleeving and enclosures shall be measured by the number of items. Other irrigation system items shall be measured as lump sum.

200-1.05 Payment: The contract price of irrigation shall include full compensation for layout, trenching, piping and fittings, valves, irrigation heads, electrical services, and all other irrigation system improvements, but excluding backflow units, controllers, sleeving and enclosures, completed and installed in place.

The contract price for backflow units, controllers, sleeving and enclosures shall include full compensation for these items completed, installed in place and tested as functional.

Irrigation system, including controller, shall be fully operational prior to any planting. Also, grade shall be within one-tenth +/- (1/10) of the finish grade.

200-2.0 Landscape (Plants and Planting):

200-2.01 General:

200-2.01A Scope of Work: The work includes all labor, materials, tools, equipment, transportation, and services necessary for the completion of planting. In general, work includes:

1. Finish Grading
2. Soil Testing, preparation, furnishing and incorporation of fertilizer
3. Furnishing all plant materials
4. Planting and fertilizing all plant materials
5. Tree staking
6. Clean up
7. Maintenance
8. Guarantee

200-2.01B Protection: Contractor shall provide necessary safeguards, exercising caution against injury or defacement of any existing site improvements and plantings.

Contractor shall be responsible for any damage at his/her expense. No trucks or vehicles of any kind shall be allowed to pass over curbs, unless adequate curb protection is provided.

Planting materials, as well as all installed work and materials of other trades, shall be protected before, during and after the installation. In the event of plant material damage, including those caused by inadequate watering during all phases of construction, necessary repairs and replacements shall take place immediately at the Contractor's expense to the satisfaction of the City.

200-2.01C Job Conditions: Actual planting shall only be performed when weather and soil conditions are suitable in accordance with locally accepted practice.

Scheduling: All construction materials and debris shall be removed on site prior to planting. Install trees, shrubs and liner stock plant material before hydraulic seeding is commenced.

Samples and Tests: City Inspector shall take soil samples at the expense of the Contractor from no less than 3 locations as directed by City. These samples shall be taken after rough grading operations are complete, and shall be taken by Contractor for testing at a City approved testing facility. Soil shall be analyzed for nutrients, pH balance, composition, texture and structure. A copy of the test results shall be delivered to the City Inspector.

200-2.02 Materials: The City reserves the right to take and analyze samples of imported materials for conformity to the City's requirements and these Standard Specifications at any time. Contractor shall furnish samples upon request by the City. Rejected materials shall be immediately removed from the site at Contractor's expense. Any additional testing of materials required by the City due to non-conformance with these Standard Specifications shall be at the Contractor's expense.

Prior to planting, subsequent post amendment soil testing shall be done, verifying compliance of recommendations at the Contractor's expense.

200-2.02A Import Soil: Shall be from clean materials, free from rocks, rubble, clods, plants, roots and toxic matter.

Prepare and submit Soil Analysis report to City Inspector for review and approval prior to importing soil.

200-2.02B Amendments: The following organic soil amendments and fertilizers shall be used for bid price basis only. Specific amendments and fertilizer specification will be made after rough grading operations are complete and soil samples are taken and analyzed. A minimum of 6 yards per 1000 square foot of organic soil amendment shall be added to site planting areas.

All materials shall be standard, approved and first grade quality and shall be in prime condition when installed and accepted. Any commercially processed or packaged material shall be delivered to the site in the original unopened container bearing the manufacturer's guaranteed analysis. Contractor shall supply City with sample of all supplied materials accompanied by analytical data from an approved laboratory source illustrating compliance or bearing the manufacturer's guaranteed analysis.

36

Contractor shall verify soil balance of material before the construction begins.

200-2.02B.1 Organic Amendment: Submit sample for City approval prior to installation.

1. Nitrogen Stabilized: 0.56 to 0.84% N based on dry weight for rice hulls.

2. Particle Size:
   95% - 100% passing 6.35 mm standard sieve
   80% - 100% passing 2.33 mm standard sieve

3. Salinity: The saturation extract conductivity shall not exceed 3.5 milligrams/centimeter at 25 degrees centigrade as determined by saturation extract method.

4. Iron Content: Minimum 0.08% dilute acid soluble Fe on dry weight basis.

5. Ash: 0-6.0% (dry weight)

200-2.02B.2 Soil Amendment:

1. Soil Sulfur: Agricultural grade sulfur processed into pellets such as Tiger brand or approved equal, containing a minimum of 90% sulfur (expressed as elemental).

2. Iron Sulfate: 20% Iron (expressed as metallic iron), derived from ferric and ferrous sulphate, 10% sulfur (expressed as elemental).

3. Calcium Carbonate: 95% lime as derived from shells.

4. Gypsum: Agricultural grade product containing 98% minimum calcium sulphate.
5. Amend: Available from Kellogg Supply Company, or approved equal.

200-2.02B.3 Fertilizer:

1. Planting fertilizer: Pelleted or granular form shall consist of the following percents by weight and shall be mixed by commercial fertilizer supplier.

   - 6% nitrogen
   - 20% phosphoric acid
   - 20% potash

2. Gro-Power planting fertilizer: Shall be Gro-Power Plus (bacteria included) with soil penetrant or approved equal and shall consist of the following percents by weight.

   - 5% nitrogen
   - 3% phosphoric acid
   - 1% potash
   - 50% humus
   - 15% humic acid

3. Planting Tablets

   a. Shall be slow released type with potential acidity of not more than 5% by weight containing the following percentages of nutrients by weight:

      - 20% nitrogen
      - 10% phosphoric acid
      - 5% potash
      - 2.6% combined sulfur
      - 35% iron (elemental) from ferrous sulfate

   b. Shall be 21-gram tablets as manufactured by Agriform or approved equal, applied per manufacturer's instructions.

4. Sulphate of Potash: 0-0-50

5. Single Super-phosphate: Commercial product containing 18-20% available Phosphoric Pentoxide, or equal.

6. Urea Formaldehyde: 38-0-0

200-2.02C Plant Material: Plant materials shall be in accordance with the "Nursery Stock Specifications," adopted in the City's "Urban Forest Guidelines" (*www.brentwoodca.gov/pdf/new/parks/Brentwood_Urban_Forest_Guidelines.pdf*).

All plants shall have a normal habit of growth and shall be sound, healthy, vigorous and free of insect infestations, plant diseases, sunscalds, fresh abrasions of the bark, excessive abrasions, or other objectionable disfigurements. Tree trunks shall be sturdy and have well-hardened branching systems and vigorous and fibrous root systems, which are, not root or pot-bound.

In the event of disagreement as to condition of root system, the root conditions of the plants furnished by the Contractor in containers will be determined by removal of earth from the roots of not less than two plants or more than two percent of the total number of plants of each species or variety. Where container-grown plants are from several sources, the roots of not less than two plants of each species or variety from each source will be inspected. In case the sample plants inspected were found to be defective, the City reserves the right to reject the entire lot or lots of plants represented by the defective samples. The City is the sole judge as to acceptability. Any plants rendered unsuitable for planting because of this inspection will be considered as samples and will be provided at the expense of the Contractor.

The size of the plants and caliper of trees will correspond with that normally expected for species and variety of commercially available nursery stock or as specified on the Improvement Plans. The minimum acceptable size of all plants measurements, if any, shall be as specified on the Improvement Plans in the list of plants. Plants larger than specified may be used with the approval of the City, but the use of larger plants will make no change in Contract price. If the use of larger plants is approved, the ball of earth or spread of roots for each plant shall be increased proportionately.

All plants not conforming to the requirements herein specified shall be considered defective and such plants, whether in place or not, shall be marked as rejected and immediately removed from site of the work and replaced with new plants at the Contractor's expense. The replaced plants shall be of the species, variety, size and

conditions specified herein or as shown on the Improvement Plans. Under no conditions will there be any substitutions of plants or sizes as listed on the Improvement Plans, except with the express consent of the City.

Plant Material shall be true to its botanical and common name and variety as specified in "Annotated Checklist of Woody Ornamental Plants in California, Oregon and Washington" published by the University of California, School of Agriculture (1979).

At no time shall trees or plant material be pruned, trimmed or topped prior to delivery. Any alteration of their shape shall be conducted only with the approval and in the presence of the City representative.

200-2.02C.1 Nursery Grown and Collected Stock:

1. Grown under climatic conditions similar to those in locality of project.

2. Container-grown stock in vigorous, healthy condition, not root-bound or with root system hardened off.

3. Use only liner stock plant material that is well established in removable containers or formed homogenous soil sections.

4. Substitution of plant material shall not be permitted unless specifically approved in writing by the City.

200-2.02C.2 Seed:

1. All seeds used shall be labeled and furnished in sealed standard containers. Provide signed copies of a statement from the vendor certifying that each delivered seed container is fully labeled in accordance with the California Seed Agricultural Code and is equal to or better than the requirements of these Specifications.

2. Seed that has become wet, moldy or otherwise damaged in transit or while in storage will not be accepted.

3. Lawn Seed Mix: Typical seed blend shall be as specified in the Improvement Plans: 100% Turf type Tall Fescue (from the top half list of the UC Coop Extension Field Trials, see Appendix C).

200-2.02C.3 Hydro – Mulch: The Hydro-Mulch shall be composed of wood cellulose fiber and contain no germination or growth-inhibiting factors. It shall have a consistent texture, which disperses evenly and remains suspended in agitated water. It shall have a temporary green dye and the following property analysis:

1.	Moisture content	9.0% +/- OD Basis
2.	Organic Matter	99.2% +/-0.8%
3.	Ash content	0.8% +/-0.2%
4.	pH	4.8% +/- 0.5%
5.	Water Holding Capacity	1150 minimum (grams of H20 per 100 grams of fiber)

200-2.02C.4 Hydro-seeding Additive (Binder): Ecology Control-M-Binder organic seeding additive.

200-2.02D Guying and Staking Materials:

200-2.02D.1 Wood Tree Stakes: As per Standard Plan L-1, "Tree Planting": 2 inches (min. nominal size) diameter x 10 feet long for 15-gallon trees; 2 inches diameter x 12 feet long for 24-inch box size trees.

200-2.02D.2 Ties: As per City Standard Plan L-1.

200-2.02E Water: Furnished by City; transport as required.

200-2.02F Mulch: Shredded Cedar Bark as manufactured by Hypenex or approved equal. Submit sample for approval.

The mulch shall consist of fibrous, woody bark mixture of varied particle size such that physical properties:

Percent Passing	Sieve Size
90 – 100	25.4 mm (3/4")
80-100	12.7 mm (1/2")
20-60	6.35 mm (3/8")

200-2.02G Wood Headerboards: As per Improvement Plans and Standard Specification 200-3.03.

200-2.02H Sand: For play areas and volleyball courts: Lone Star Lapis B-16, or approved equal.

200-2.02I Sod: Sod shall be species as noted on the Improvement Plans with ¾-inch thick pads, classy grass, mellos, etc., free of weeds. Sod shall be purchased from a commercial grower such as Nunes, Cal Turf, Warren's or equal. Care shall be taken to prevent drying during shipping and handling. No nylon mesh shall be allowed.

200-2.02J Inspection: Obtain City's certification that final grades to 0.10 +/- feet have been established prior to commencing planting operations. Provide for inclusion of all amendments, settling, etc. Contractor shall be responsible for shaping all planting areas as indicated on Improvement Plans or as directed by the City Engineer.

Inspect trees, shrubs and liner stock plant material for injury, insect infestation and for improper pruning.

Planting shall not commence until deficiencies are corrected or plant material has been replaced. Rejected plant material shall be removed from site immediately.

200-2.02K Soil Preparation Prior to Planting: Soil shall be ripped to the depth of 12" by mechanical ripper, followed by 6" rototill. After approximate finished grades have been established, soil shall be conditioned and fertilized in the following manner:

Amendments shall be uniformly spread and cultivated thoroughly by means of mechanical tiller into the top 6 inches of soil. The following organic soil amendments and fertilizer rates and quantities shall be used for bid basis only, except when there is a minimum requirement of 6 cubic yards/1000 of organic amendment.

Specific planting requirements will be concluded after rough grading operations are complete and soil samples are tested by a City approved testing laboratory.

Note: A City representative shall be on-site when the samples are taken and shall-submit those samples to the testing laboratory.

Application Rates: (Per 1,000 square feet). To be used for bid price basis only. Specific amendments will be made following soil tests.

1. Nitrogen stabilized organic amendment – 6 cu yards minimum spec.

2. Planting fertilizer – 15 lbs.

3. Agricultural gypsum – 25 lbs.

4. Soil sulphur – 20 lbs.

At time of planting, the top two (2) inches of all areas to be planted shall be free of stones, stumps, construction material (including gravel, aggregate base rock) or other deleterious matter 1 inch in diameter or larger, and shall be free from all wire, plaster, or similar objects that would be a hindrance to planting or maintenance. Class II A.B. is not permitted in any planted area at any depth.

All materials shall be delivered directly to the project site. All transportation receipts shall be made available to the City.

200-2.02L Final Grades:

1. Minor modifications to grade may be required to establish the final grade.

2. Finish grading shall insure proper drainage of the site as determined by the City.

3. All areas shall be graded so that the final grades will be 1 inch below adjacent paved areas, sidewalks, valve boxes, clean-outs, drains, manholes, etc., as indicated on the Improvement Plans.

4. Surface drainage shall be away from all fences and walls. See grading and drainage Improvement Plans. For additional information refer to Section 110, Storm Drain Facilities.

5. Eliminate all erosion scars prior to commencing maintenance period.

6. Grades not to exceed 2-3% at area drains/catch basins.

7. Grades shall be certified to be within 1/10 ± prior to acceptance.

200-2.02M Disposal of Excess Soil: Dispose of any unacceptable or excess soil at a legal offsite location.

200-2.03 Planting Installation:

200-2.03A General: Actual planting shall be performed during those periods when weather and soil conditions are suitable and in accordance with locally accepted practice as approved by the City.

Irrigation system and automatic watering programs shall be fully functional before planting.

The amount of plants, which shall be distributed for daily planting within the given planting area, shall be based on as many plants that can be suitably watered on that same day.

Containers shall be opened and plants shall be removed in such a manner that the ball or earth surrounding the roots remains intact and they shall be planted and watered as herein specified immediately after removal from the containers. Containers shall not be opened prior to placing the plants in the planting area.

200-2.03B Pre-Plant Weed Control: If live perennial weeds exists on site at the beginning of work, spray with a non-selective systemic contact herbicide, as recommended and applied by an approved licensed landscape pest control advisor and applicator. Leave sprayed plants intact for at least 15 days to allow systemic kill.

Clear and remove these existing weeds by mowing or grubbing off all plant parts at least below the surface of the soil over the entire area to be planted.

After irrigation system is operational, apply water for 14 days, as needed, to achieve weed germination. Before planting/seeding, apply contact herbicides and wait as needed before planting. Repeat, if required by City Inspector.

Maintain site weed-free until final acceptance by the City by utilizing mechanical and chemical treatment.

200-2.03C Lay-Out of Major Plantings: Locations for plants and outlines of areas to be planted shall be marked on the ground by the Contractor before any plant pits are dug. All such locations shall be approved by the City.

No trees shall be planted within 5’ of existing or designed water, sewer, storm drain and joint trench lines. If underground construction or utility line is encountered in the excavation of planting areas, other locations for planting may be selected by the City.

Layout shall be accomplished with flagged grade stakes indicating plant names and specified container size on each stake. It shall be the Contractor's responsibility to confirm with the City and governing agencies the location and depth of all underground utilities, and obstructions.

200-2.03D Planting of Trees, Shrubs and Vines: Excavation for planting shall include the striping and stacking of all acceptable topsoil encountered within the areas to be excavated from trenches, tree holes, plant pits and planting beds.

Excess soil generated from the planting holes not used to be as backfill or in establishing the final grades shall be removed from the site.

Protect all areas from excessive compaction from trucking plants or other materials in the planting site.

Center plant in pit or trench. Face plants with fullest growth into prevailing wind.

Set plant plumb and hold rigidly in position until soil has been tamped firmly around ball or roots.

Plant pit shall be as per City Standard Plans L-1 and L-4.

All excavated holes shall be square in shape and have vertical sides with scarified/fractured surfaces and shall be of a size that is twice the diameter and the same depth of the root ball for all trees and shrubs.

Container plants shall be backfilled with 6 parts by volume on-site soil, 4 parts by volume organic amendment, 1 lb. 6-20-20 fertilizer mix per cubic yard of mix, 2 lbs. iron sulphate per cubic yard of mix.

The bottom of the planting pit shall be compacted before planting.

All plants, which settle deeper than the surrounding grade, shall be raised to the correct level. After the plant has been placed, additional unamended backfill shall be added to the hole to cover approximately one-third of the height of the root ball. At this stage, water shall be added to the top of the partly filled hole to thoroughly saturate the root ball and adjacent soil.

Can Removal:

- Cut cans on two sides with an acceptable can cutter.

- Do not injure root ball.
- Do not cut cans with spade or ax.

Box Removal:

- Remove bottom of plant boxes before planting.
- Remove sides of box without damage to root ball after positioning plant and partially backfilling.

Plant Tablets: After the water has completely drained, planting tablets shall be placed as indicated below.

- One tablet per 4-inch liner
- One tablet per 1-gallon container
- Two tablets per 5-gallon container
- Three tablets per 15-gallon container

Planting tablets shall be set with each plant on the top of the root ball while the plants are still in their containers so that the required number of tablets to be used in each hole can be easily verified by the City.

Backfill: The remainder of the hole shall then be backfilled with amended backfill and tamped firm.

After backfilling, an earthen basin shall be constructed around each plant. Each basin shall be of a depth sufficient to hold at least 2 inches of water. The basins shall be constructed of amended backfill materials and form a minimum radius of 36" around the plant trunk. Two-inch layer of fibrous bark mulch shall be applied within the basins after their construction.

Pruning: Pruning shall be limited to the minimum necessary to remove injured twigs and branches. Pruning may not be done prior to delivery of plants. Temporary branches below height of permanent scaffold branches will not be removed.

Root Control Barrier: Install per City Standard L-3.

200-2.03E Planting of Groundcovers: Groundcover plants shall be grown in flats, liners or 1-gallon containers as indicated on the Improvement Plans. Plants shall remain in their containers until transplanting. The container's soil shall contain sufficient moisture so that it will not fall apart when lifting the plants.

Unless otherwise noted, groundcover shall be planted in straight rows and evenly spaced, in a triangular pattern at intervals specified in the Improvement Plans.

Each rooted plant shall be planted with its proportionate amount of soil. Plantings shall be immediately sprinkled after planting until the entire areas is soaked to the full depth of each hole.

Care shall be exercised at all times to protect the plants after planting. Any damage to plants by trampling or other operations shall be repaired immediately to the satisfaction of the City Engineer.

200-2.03F Mulch: City-approved mulch shall be placed in planting areas to a minimum depth of 2 inches unless otherwise specified on the Improvement Plans. Prior to the placement of mulch, pre-emergent herbicide shall be applied to all shrubs and groundcover areas. The pre-emergent herbicide shall be Ronstar or approved equal, granular and applied per the manufacturer's specifications. City shall verify the application of the pre-emergent prior to the placement of mulch.

200-2.03G Planting of Sod: The sod bed shall be tilled and amended with the following materials to a minimum depth of 6 inches. The following are minimum requirements:

- 6 cubic yards Nitrogen stabilized redwood shavings per 1,000 SF
- 15 pounds planting fertilizer per 1,000 SF
- 25 pounds agricultural gypsum per 1,000 SF
- 20 pounds soil sulphur per 1,000 SF

Sod rolls shall be laid tightly in a straight line with tightly butted, staggered joints. There shall be no open or overlapping joints. A sharp edge knife shall be used to cut sod to fit around sprinklers, tree roots, paved edges, etc. Sod shall be laid parallel to slope contours.

Lightly water sod within 1 hour of the time it is laid. Sod shall then be rolled smooth to eliminate any surface irregularities and insure complete soil contact. After rolling, water thoroughly to penetrate subsoil to a depth of at least 8 inches. Repeat watering at regular intervals to keep sod moist until firmly rooted. Sod-growing medium shall match soils texture and composition of athletic fields and other City soils.

Finish soil surface should be approximately 1 inch below adjacent pavement grades in order to accommodate sod pad thickness. Finish sod grade shall be flush to ½ inch maximum below adjacent paving

Protect turf areas with temporary fencing, if necessary. Maintain protective barriers in an orderly condition and repair any damage to turf until the City has accepted planting work.

200-2.03H Hydro-Seeding Preparation and Operation:

The ensuing process shall be followed in order listed:

1. See Pre-Plant Weed Control, Section 200-2.03B, "Pre-Plant Weed Control," of these City Standard Specifications.

2. Install trees if they occur in hydro-seeded area.

3. Hydro-seeding Operation:

    a. Mix shall be as shown in Section 200-2.02C.2, "Seed", of these City Standard Specifications.

    b. All hydro-seeding operation of areas shall be applied by an approved hydro-mulch company.

    c. The hydro-mulch shall be applied in the form of slurry consisting of cellulose fiber, seed, chemical additives, M-binder, commercial fertilizer, and water. When hydraulically sprayed on the soil surface, the hydro-mulching shall form a blotter-like groundcover impregnated uniformly with seed and fertilizer and shall allow the absorption of moisture and rainfall to percolate to the underlying soil.

    d. Preparation: The slurry preparation shall take place at the worksite and shall begin by adding water to the tank when the engine is at half throttle. When the water level has reached the height of the agitator shaft, full recirculation shall be established; and at this time the seed shall be added. Fertilizer shall then be added, followed by mulch. The mulch shall only be added to the mixture after the seed and the tank is at least one-third filled with water. All the mulch shall be added by the time the tank is two-thirds to three-fourths full. Spraying shall commence immediately when the tank is full.

e. Application: The operator shall spray with a uniform visible coat by using the green color of the mulch as a guide. The slurry shall be applied in a sweeping motion, in an arched stream so as to fall like rain, allowing the wood fibers to build on each other until a good coat is achieved and the material is spread at the required rate per acre.

f. Application Rates: The seed mix shall be applied at a rate of 400 lbs. per acre. The fiber shall be applied at a rate of 1,800 lbs. per acre. The hydro-seeding fertilizer shall be applied at a rate of 200 lbs. (16-20-0) per acre and 150 lbs. urea formaldehyde (38-0-0) per acre. The M-binder shall be applied at a rate of 60 lbs. per acre.

g. Time Limit: All slurry mixture that has not been applied within 2 hours after mixing shall be rejected and removed from the project and disposed at the Contractor's expense.

h. Daily work sheets must be filled out by nozzlemen. One copy shall be sent to the City. The following information shall be recorded:

- Seed – type, amount
- Fertilizer – analysis, amount
- Mulch – type, amount
- Seeding Additive – type, amount
- Number of Loads – amount of water
- Area covered in acres
- Equipment used – capacity, license number if applicable

i. Protection: Special care should be exercised by the Contractor in preventing any of the slurry being sprayed inside any reservoir basin or into drainage ditches and channels, which may impede the free flow of rain or irrigation water. Any slurry spilled into restricted areas shall be cleaned up at the Contractor's expense to the satisfaction of the City.

j. Immediately following application of hydro-mulch, the Contractor shall wash excess material from previously planted materials and architectural features. Care shall be exercised to avoid washing of eroding mulch materials from area.

k. Equipment: Hydraulic equipment used for the application of the fertilizer, seed and slurry or prepared wood pulp shall have a built-in agitation system and operating capacity sufficient to agitate, suspend, and homogeneously mix a slurry containing not less than 40 lbs. of fiber mulch plus a combined total of 7 lbs. fertilizer solids for each 100 gallons of water.

l. The slurry distribution lines shall be large enough to prevent stoppage and shall be equipped with a set of hydraulic spray nozzles, which will provide a continuous no-fluctuating discharge. The slurry tank shall have a minimum capacity of 1,500 gallons and shall be mounted on a traveling unit, either self-propelled or drawn by a separate unit which will place the slurry tank and spray nozzles within sufficient proximity to the areas to be seeded.

m. The hydraulic equipment for pesticide applications shall consist of a clean 150-gallon minimum capacity fiberglass tank with complete mechanical agitation. The pump volume shall be 10 gallons per minute while operating at a pressure of 100 pounds per square inch. Distribution lines shall be large enough to carry the volume of water necessary for even chemical distribution. The spray nozzle must cover a 15-foot swath, with a minimum of 5 gallons per minute at 80 PSI.

200-2.03I Clean-Up: After all planting operations have been completed; remove all trash, excess soil, empty plant containers and rubbish from the property. All scars, ruts or other marks in the ground caused by this work shall be repaired and the ground shall be left in a neat and orderly condition throughout the site. Contractor shall pick up all trash resulting from this work no less frequently than each Friday before leaving the site, once a week, and/or the last working day of each week. All trash shall be removed completely from the site.

The Contractor shall leave the site area broom-cleaned and shall wash down all paved areas within the worksite, leaving the premises in a clean condition.

200-2.03J Observation Schedule: The Contractor shall be responsible for notifying the City in advance for the following site visits, according to that indicated below. It is the responsibility of the Contractor to confirm all elevations shown on plans and the balance of cut and fill amounts.

- Pre-Job Conference – 7 days
- Final grade review – 48 hours

- Plant material review – 48 hours
- Plant layout review – 48 hours
- Soil preparation and planting operations.
- One tree with each type of specified staking shall be approved prior to planting of trees – 48 hours
- Pre-Maintenance – 7 days
- Final walk-through – 10 days

When someone other than the City performs the observation of the site, the Contractor shall show the City evidence in writing of when and to whom these inspections were made.

No site visits shall commence without all items noted in previous Observation Reports, either completed or remedied, unless such compliance has been waived by the City. Failure to accomplish punch list tasks or prepare adequately for desired inspections shall make the Contractor responsible for reimbursing the City at his current billing rates per hour (plus transportation costs) of inspection costs. No further inspections shall be scheduled until this charge has been paid and received.

200-2.04 Planting Maintenance:

200-2.04A General Requirements: The time duration of the plant establishment period shall be a minimum of 90 calendar days.

Plant establishment period shall commence upon completion of the project and a written approval of the City. The plant establishment period shall continue after all planting is completed, including the establishment of acceptable stands of thriving plants, and after any other additional punchlist items has been completed and accepted by the City Inspector.

- Protect all areas against damage; including erosion and trespass, and provide proper safeguards. Maintain and keep in good repair all temporary barriers erected to prevent trespass.

- Keep all walks and paved areas clean. Keep site free from debris resulting from landscape work or maintenance.

- Check sprinkler systems at each watering; adjust coverage and clean nozzles immediately. Adjust timing of sprinkler controller to prevent flooding. Repair all damages immediately.

- Maintain adequate moisture depth in soil to insure vigorous growth. Contractor is required to deep water all trees to insure adequate moisture level around said trees.

- Keep contract areas free of weeds by cultivating, hoeing or hand pulling. Use of chemical weed killers will not relieve the Contractor of the responsibility of keeping areas free of weeds over one inch high at all times.

- Submit irrigation schedule, including total precipitation, by plant area for approval.

200-2.04B Tree and Shrub Maintenance: During the entire maintenance period, trees and shrubs shall be maintained by regular watering, cultivating, weeding, repairing stakes and ties and spraying for insect pests. Prune when requested by the City.

Keep watering basins in good condition and weed free at all times.

All damaged, unhealthy or dead trees, shrubs and vines shall be replaced with the same but new stock immediately at no cost to City.

200-2.04C Turf Maintenance: During the entire maintenance period, cut turf as frequently as growth of grass requires to a height of two inches unless otherwise directed by the City Inspector. Maintain constant adequate moisture. Do not remove more than 1/3 of grass blade height at one mowing.

Trim edges of turf at paving and headerboards at time of second cutting and at each cutting thereafter.

Trim around trees in the turf areas. Provide 6 feet diameter area under trees free from turf at all times.

Keep turf areas free of undesirable weeds and grasses by the application of suitable, selective, and City-approved weed killers or simply by hand pulling.

Reseed all areas, which fail to adequately germinate as soon as evident, or as directed by the City.

Remove all rocks over one inch, which emerge on the surface.

Repair any hollow, settled or eroded areas by filling, rolling, top dressing and reseeding, or as directed.

Fertilize all planting areas with 16-6-8 commercial fertilizers at the rate of 6 lbs. per 1,000 square feet prior to the end of the first 30 days after planting and at 30-day intervals thereafter. Planting areas shall be watered thoroughly after applying fertilizer.

Perform all necessary operations to establish a uniform, thick and vigorous stand of grass.

200-2.05 Final Planting Inspection and Acceptance: Written notice requesting inspection shall be submitted at least 10 days before the anticipated date.

Final inspection for acceptance shall be made at the conclusion of the planting maintenance period provided that on such date, all improvements and all corrective works has been completed. If all project improvements and corrective work were not completed, the planting maintenance shall continue at no additional cost to the City until work has been completed and City Council has accepted project. This condition may be waived by the City under such circumstances wherein the City has granted an extension of time to permit the completion of a particular portion of the work beyond the time of completion set forth in the agreement.

Prior to being considered ready for inspection, the Contractor shall have done a final weeding and raking of all planting areas. Plant basins shall be repaired, re-plumb all tree stakes and snug all tire wires, and the job site cleared of all debris and presented in a neat, orderly fashion.

Upon completion and before final inspection, Contractor/Landscape Architect shall provide (See Appendix B):

- A complete inventory by square foot area of turf and ground cover areas.
- A complete inventory by size and species of all shrub and trees.
- Lineal and perimeter square foot measurement of all paved areas including asphalt and concrete.
- A complete inventory of play structures, including model number of structure and individual components and resilient surfaces, and manufacturer's warranty. Include manufacturer and sales representatives' addresses, phone numbers, and e-mail addresses.

- A manufacturer information inventory of all plant materials, irrigation equipment, lights, hardscape, benches, picnic tables, drinking fountains, garbage containers, bike racks, basketball courts and tennis courts.

200-2.05A Guarantee and Replacement: All plants and planting shall be guaranteed to be in a healthy, thriving condition until the end of the maintenance period or beyond that time until active growth is evident. Guarantee all trees for one year from date of acceptance by City Council.

200-2.06 Measurement: Plants and plantings, excluding mulching and the maintenance period, shall be measured by the number of items. Mulching and the maintenance period shall each be measured as lump sum items.

200-2.07 Payment: The contract price for plants and plantings shall include full compensation for the plant pit, root barrier, plant, backfill mix, fertilizer and staking.

The contract price for mulching shall include full compensation for pre-emergent herbicide and mulch complete in place.

The contract price for the maintenance period shall include full compensation for fulfilling all requirements of Section 200-2.04, "Planting Maintenance", of these City Standard Specifications.

200-3.0 Miscellaneous:

200-3.01 Monuments: Monument materials and construction shall conform to Standard Plan ST-26, "Boxed Survey Monument". Monuments shall not be installed until the asphalt concrete pavement has been completed and shall be installed at the locations shown on the Improvement Plans.

Monuments shall be measured by the number of items.

The contract price for monuments shall include full compensation for the monument complete in place.

200-3.02 Street Barricades: Street barricade materials and construction shall conform to Standard Plan ST-16 and shall be installed at the locations shown on the Improvement Plans.

Street barricades shall be measured by the linear foot.

The contract price for street barricades shall include full compensation for the street barricade complete in place.

200-3.03 Headerboards: Headerboards shall be installed at locations shown on the Improvement Plans. Headerboards and stakes shall be recycled composite plastic, graded in accordance with Section 57-3.02, "Materials" of the State of California Standard Specifications. Nails shall be hot-dipped galvanized.

When headerboards are installed along unprotected edges of pavement, the top edges of the headerboard shall conform to the line and grade of pavement.

Headerboards shall be 2 inches by 6 inches, unless otherwise noted, and shall be held in place with 2 inches by 2 inches stakes of lengths necessary to extend 12 inches into solid ground.

Stakes shall be of sound material, neatly pointed, driven vertically, located at butt joints and elsewhere, spaced not over 4 feet on centers and securely nailed to the headerboards. Headerboards shall have a continuous bearing on undisturbed earth or compacted earth or base rock.

Headerboards shall be measured by the linear foot.

The Contractor price for headerboards shall include full compensation for the headerboard, complete in place as specified in these City Standard Specifications and shown on the Improvement Plans.

200-3.04 Bollards: Bollard materials and construction shall conform to Standard Plan L-12, "Removable Metal Bollard." Bollards shall be installed at the locations shown on the Improvement plans.

Bollards shall be measured by the number of items.

The contract price for bollards shall include full compensation for the bollard complete in place.

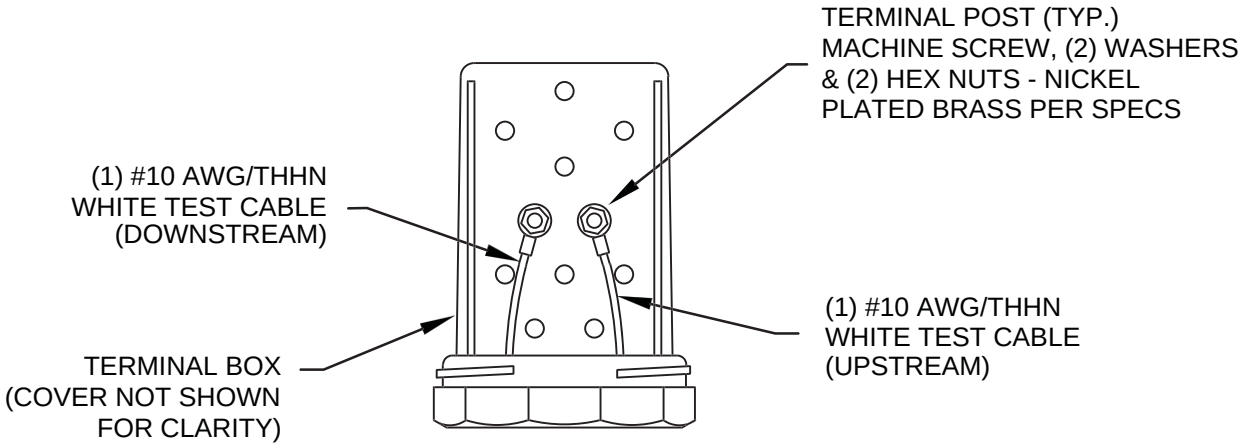

CTS TERMINAL BOX

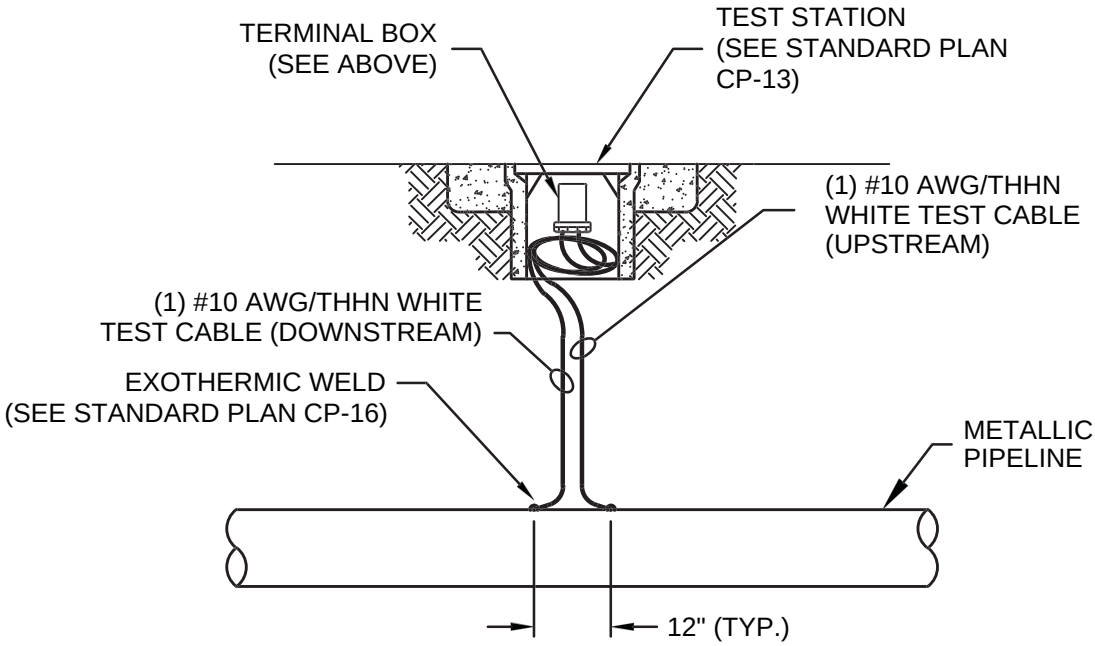

NOTES:

1. IDENTIFY CABLES PER STANDARD PLAN CP-15.
2. LOCATION TO BE SHOWN ON THE PLANS OR AS DIRECTED BY THE CITY ENGINEER.

(Not To Scale)

REGISTERED PROFESSIONAL ENGINEER
BALWINDER S. GREWAL
C 49122
EXP. 9/30/14
STATE OF CALIFORNIA

PUBLIC WORKS DEPARTMENT

THE CITY OF BRENTWOOD

CORROSION TEST STATION (CTS)

BALWINDER S. GREWAL CITY ENGINEER

DATE: JUNE 20, 2003

REVISED: DEC. 31, 2013

SHEET No.
CP-1

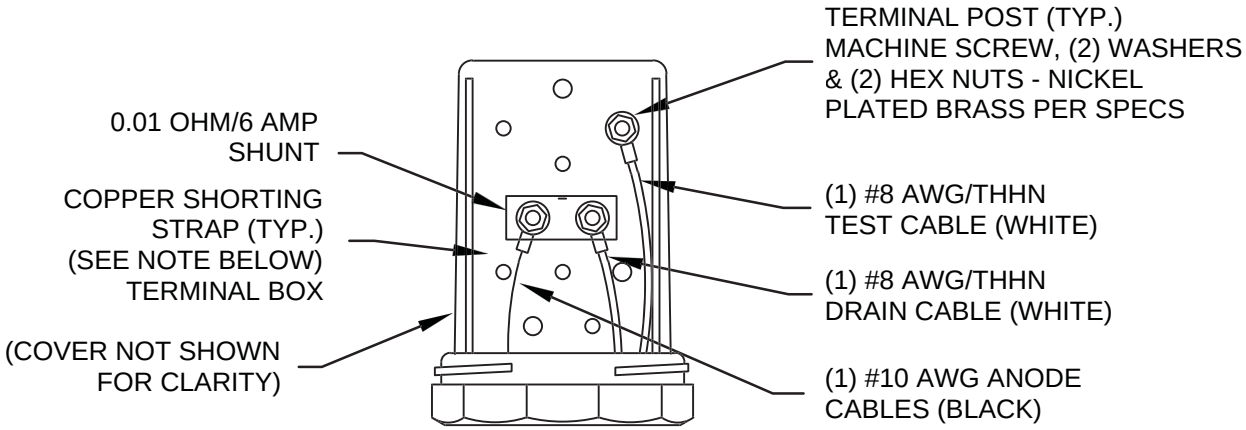

ATS TERMINAL BOX

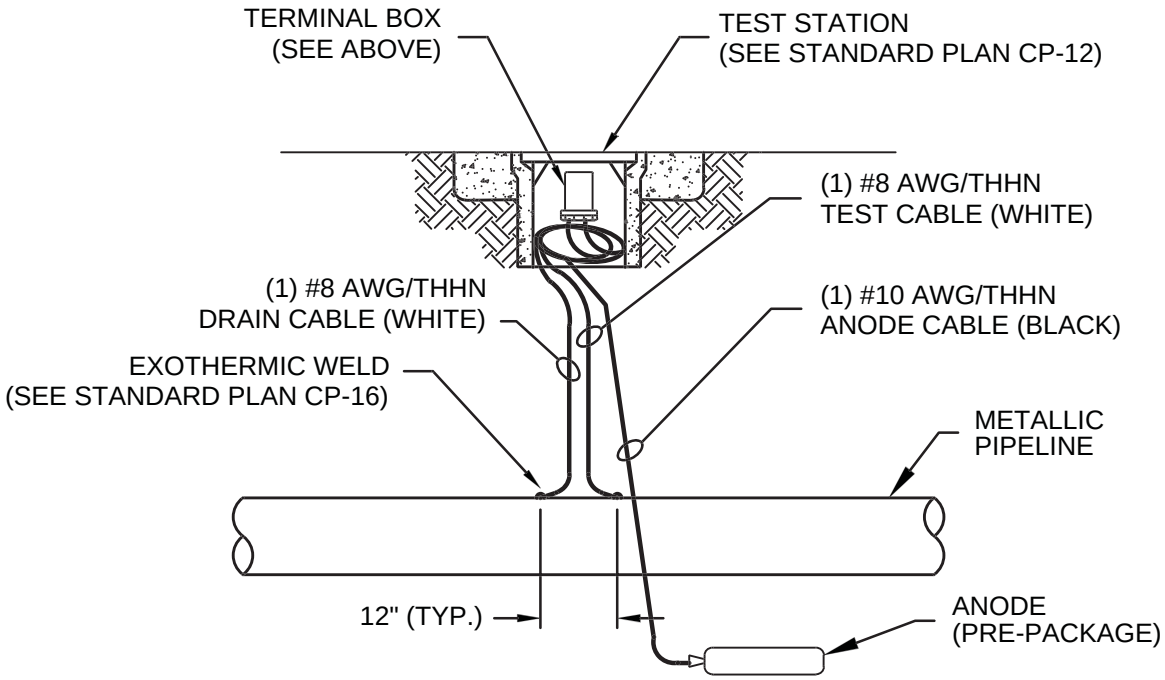

NOTE:

IDENTIFY CABLES PER STANDARD PLAN CP-15.

(Not To Scale)

REGISTERED PROFESSIONAL ENGINEER
BALWINDER S. GREWAL
C 49122
EXP. 9/30/14
STATE OF CALIFORNIA

PUBLIC WORKS DEPARTMENT

THE CITY OF BRENTWOOD

ANODE TEST STATION (ATS)

BALWINDER S. GREWAL CITY ENGINEER

DATE: JUNE 15, 2003

REVISED: DEC. 31, 2013

SHEET No.

CP-2

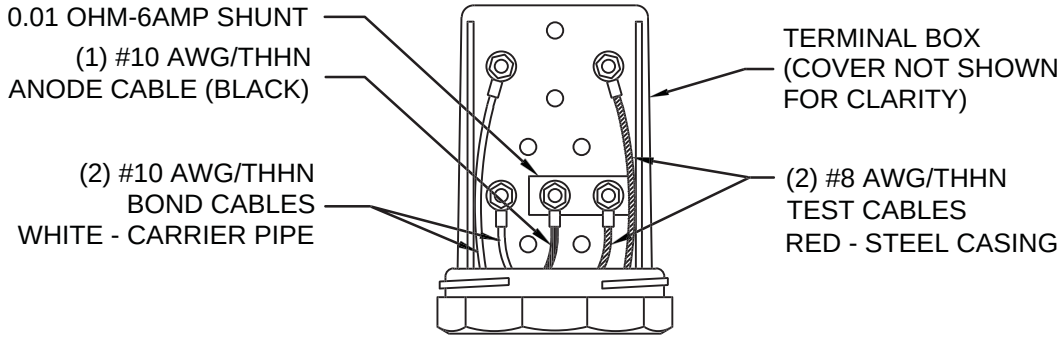

CATS TERMINAL BOX

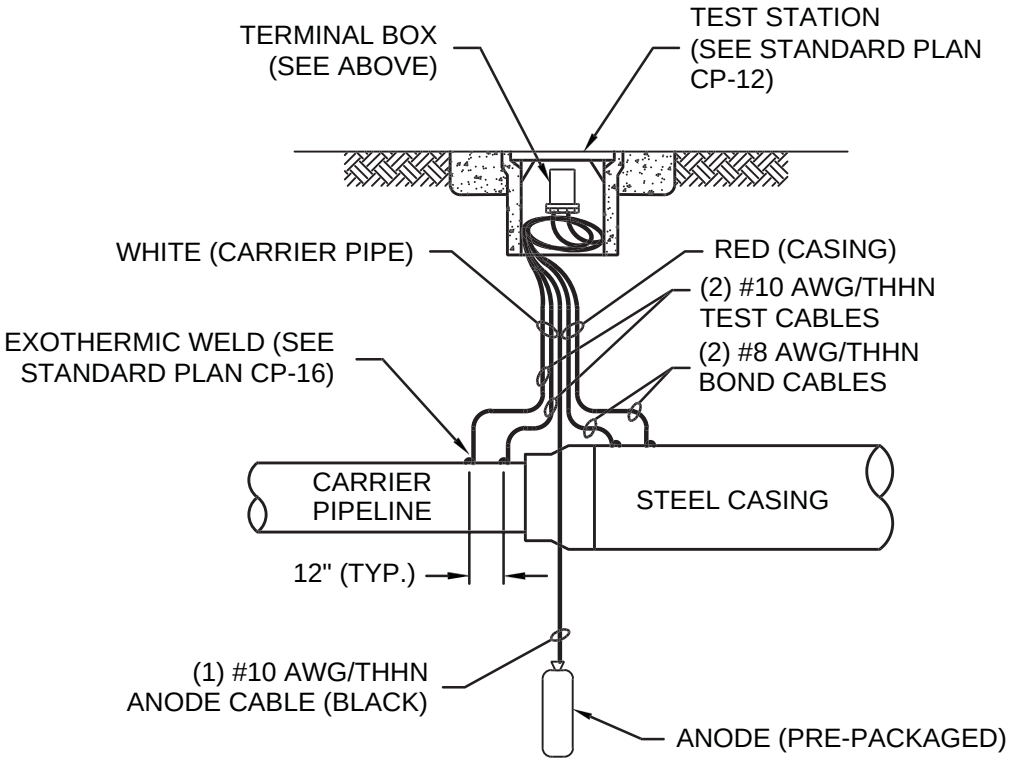

NOTES:

1. CARRIER PIPE & CASING SHALL BE ELECTRICALLY ISOLATED VIA CASING INSULATORS.
2. ON A NON-METALLIC CARRIER PIPE, DELETE WHITE CABLES AND EXOTHERMIC WELDS.
3. IDENTIFY CABLES PER STANDARD PLAN CP-15.

(Not To Scale)

PUBLIC WORKS DEPARTMENT

THE CITY OF BRENTWOOD

CASING TEST STATION - CATS

BALWINDER S. GREWAL CITY ENGINEER

DATE: JUNE 20, 2003

REVISED: DEC. 31, 2013

SHEET No. **CP-3**

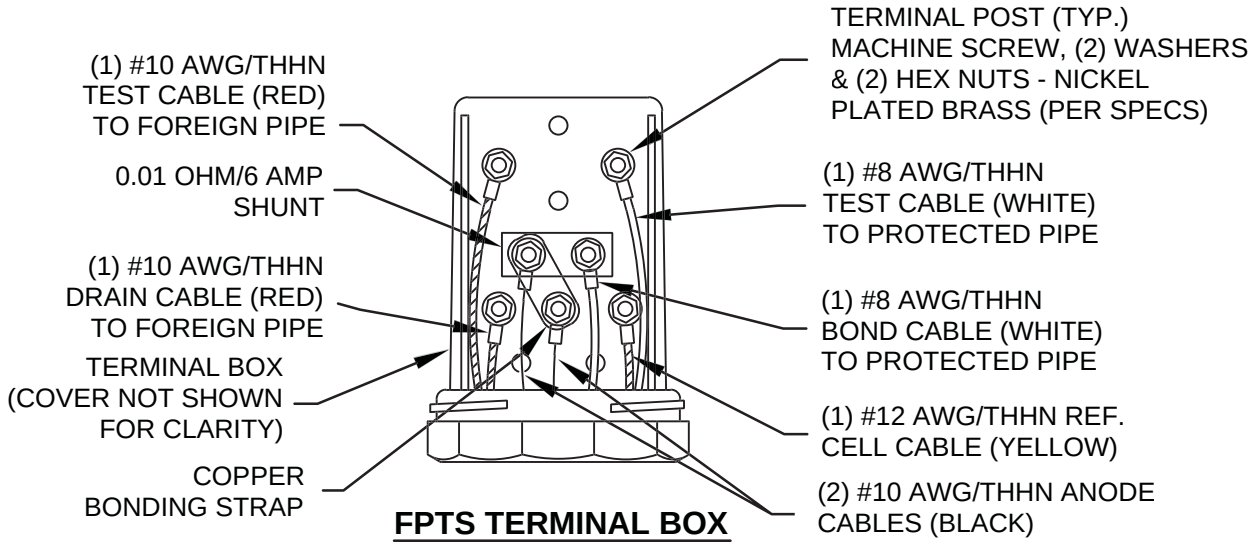

FPTS TERMINAL BOX

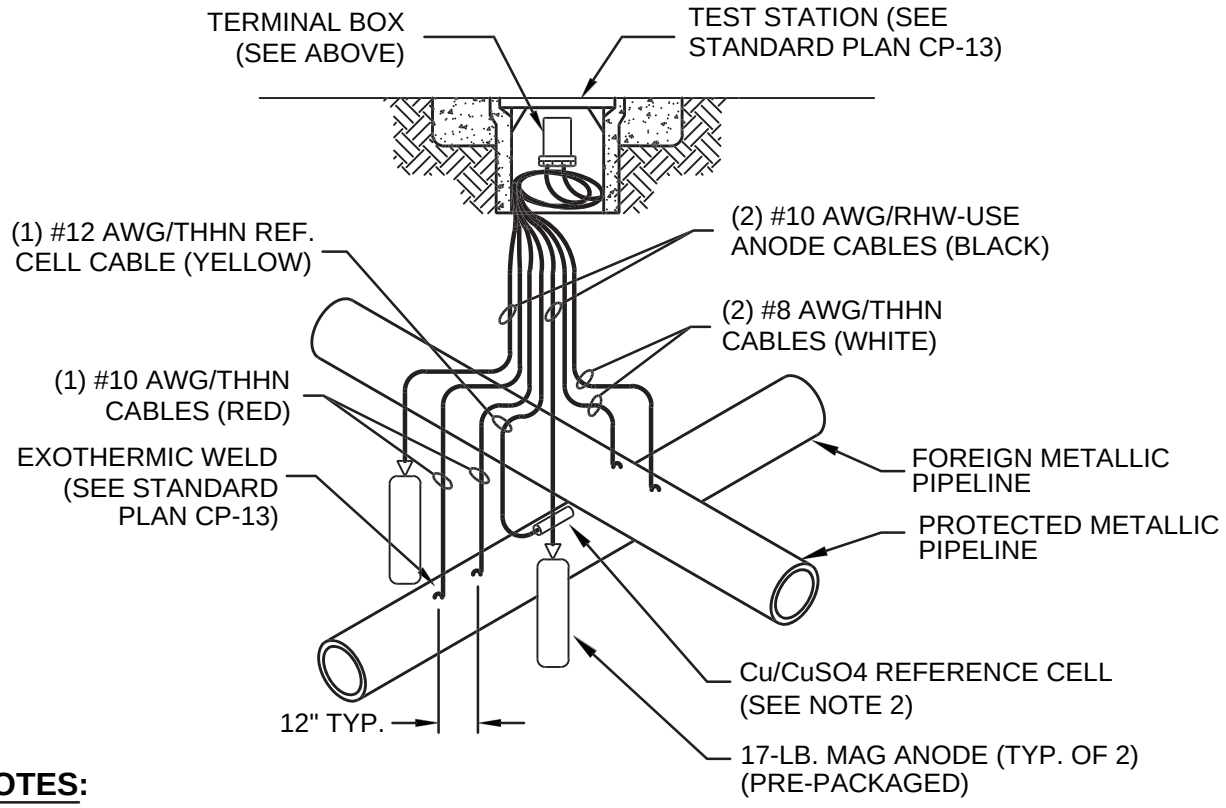

NOTES:

1. IDENTIFY CABLES PER STANDARD PLAN CP-15.
2. THE REFERENCE CELL SHALL BE INSTALLED BETWEEN THE TWO PIPES.

(Not To Scale)

REGISTERED PROFESSIONAL ENGINEER
BALWINDER S. GREWAL
C 49122
EXP. 9/30/14
STATE OF CALIFORNIA

PUBLIC WORKS DEPARTMENT

THE CITY OF BRENTWOOD

FOREIGN PIPELINE TEST STATION (FPTS)

BALWINDER S. GREWAL CITY ENGINEER

DATE: JUNE 20, 2003

REVISED: DEC. 31, 2013

SHEET No. **CP-4**

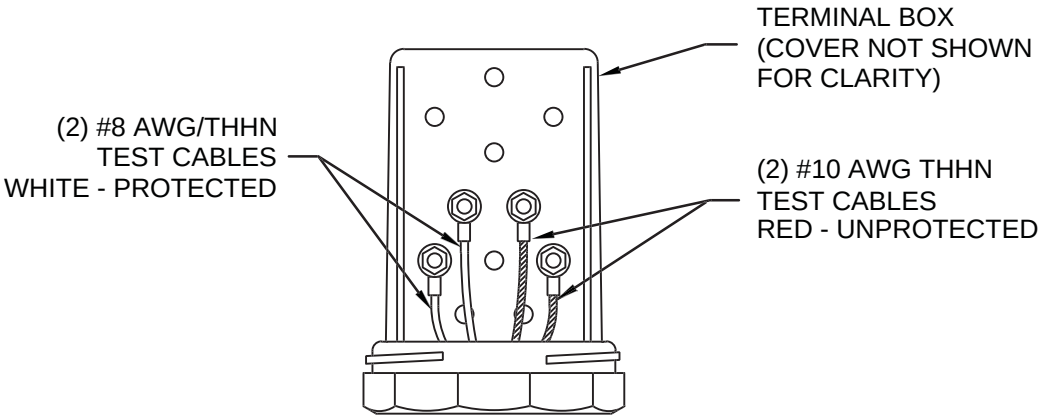

IJTS TERMINAL BOX

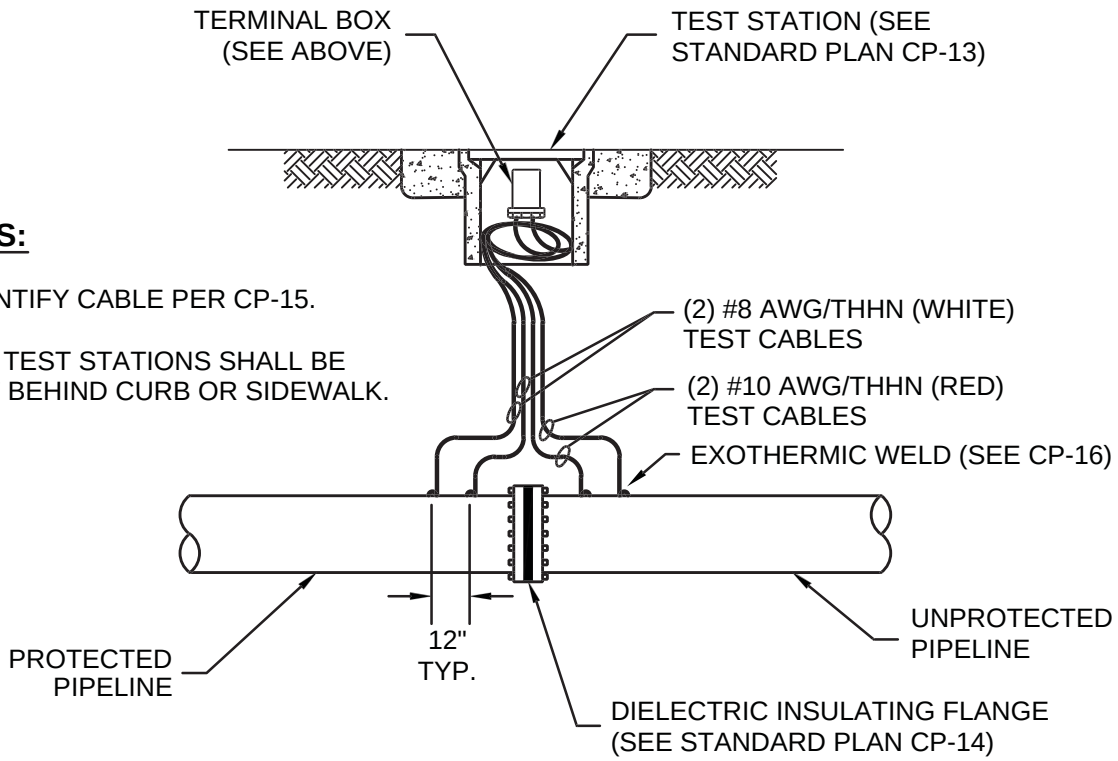

NOTES:

1. IDENTIFY CABLE PER CP-15.
2. ALL TEST STATIONS SHALL BE SET BEHIND CURB OR SIDEWALK.

(Not To Scale)

REGISTERED PROFESSIONAL ENGINEER
BALWINDER S. GREWAL
C 49122
EXP. 9/30/14
STATE OF CALIFORNIA

PUBLIC WORKS DEPARTMENT

THE CITY OF BRENTWOOD

INSULATING JOINT TEST STATION (IJTS)

BALWINDER S. GREWAL CITY ENGINEER

DATE: JUNE 20, 2003

REVISED: DEC. 31, 2013

SHEET No.
CP-5

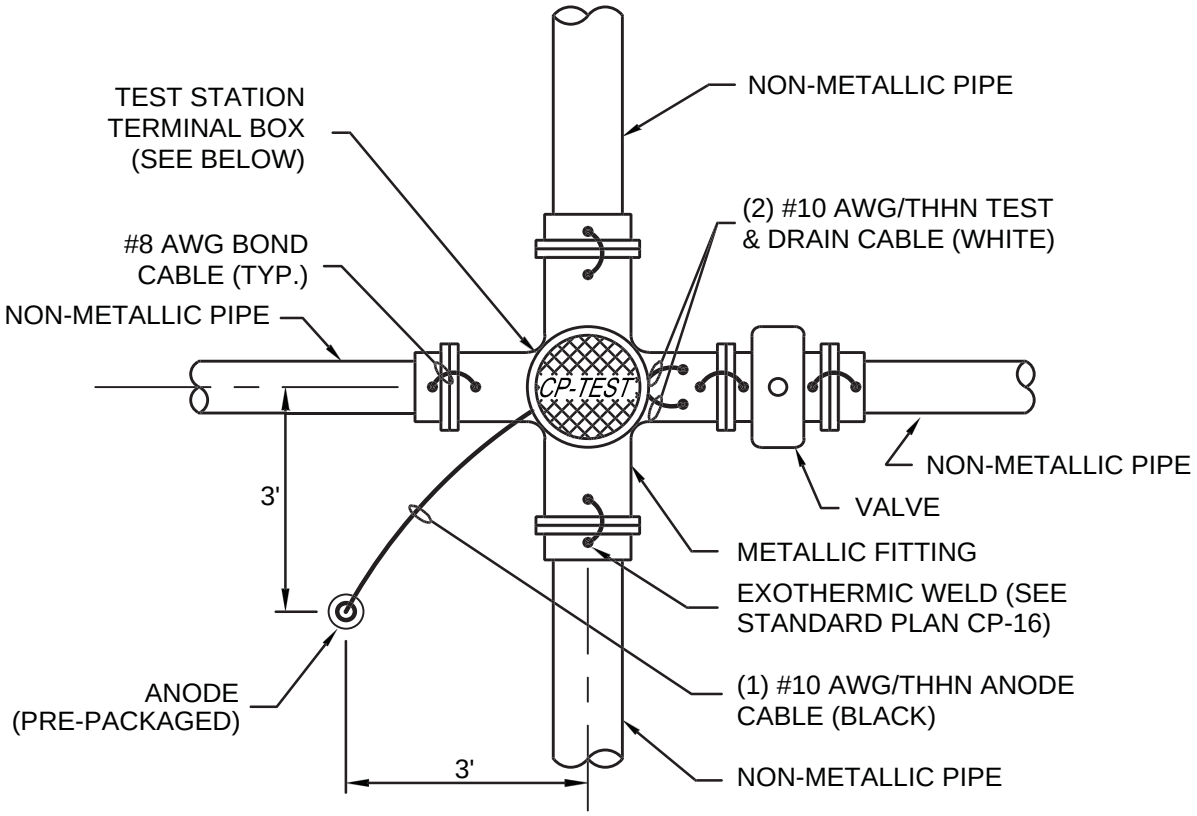

NOTES:

1. IDENTIFY CABLES PER CP-15.
2. TEST STATIONS MAY BE DELETED AT THE DISCRETION OF THE CITY ENGINEER. IF THE TEST STATION IS DELETED, CONNECT ANODE DIRECTLY TO THE FITTING PER CP-16.
3. TEST STATIONS SHALL BE SET BEHIND CURB OR SIDEWALK.

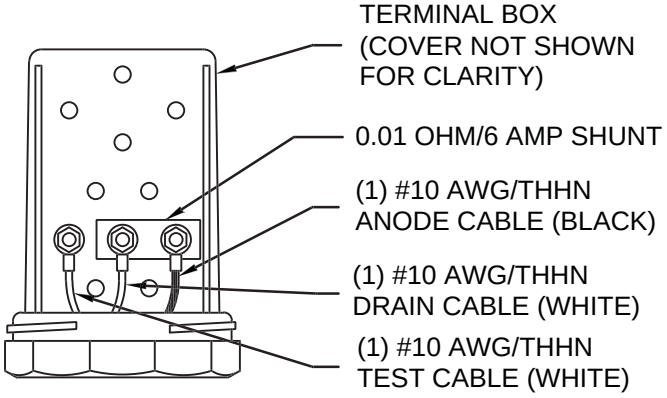

ATS TERMINAL BOX

(Not To Scale)

REGISTERED PROFESSIONAL ENGINEER
BALWINDER S. GREWAL
C 49122
EXP. 9/30/14
STATE OF CALIFORNIA

PUBLIC WORKS DEPARTMENT

THE CITY OF BRENTWOOD

ANODE TEST STATION - CROSS

BALWINDER S. GREWAL CITY ENGINEER

DATE: JUNE 20, 2003

REVISED: DEC. 31, 2013

SHEET No.

CP-6

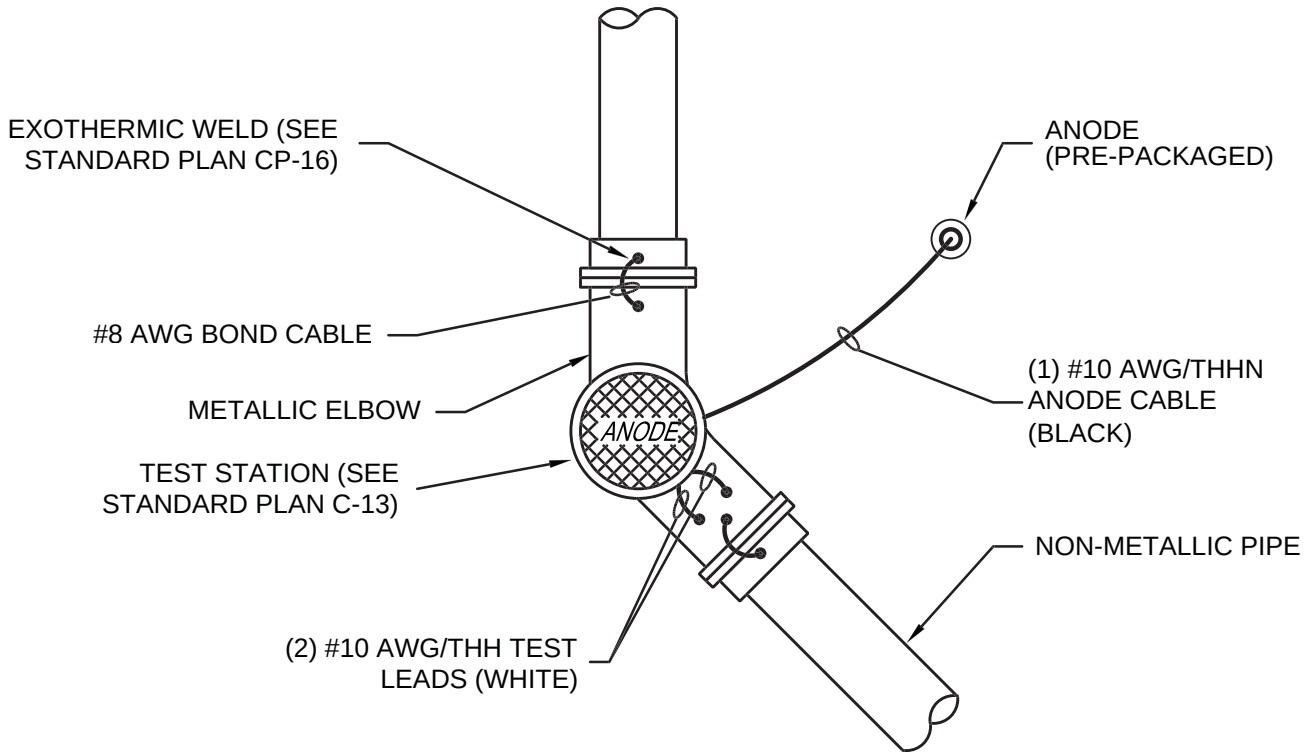

PLAN

NOTES:

1. FOR TERMINAL BOX WIRING SEE STANDARD PLAN CP-6.
2. TEST STATION MAY BE DELETED AT THE DISCRETION OF THE CITY ENGINEER. IF THE TEST STATION IS DELETED, CONNECT THE ANODE LEAD DIRECTLY TO THE FITTING PER STANDARD PLAN CP-16.
3. ALL TEST STATIONS SHALL BE SET BEHIND CURB OR SIDEWALK.

(Not To Scale)

REGISTERED PROFESSIONAL ENGINEER
BALWINDER S. GREWAL
C 49122
EXP. 9/30/14
STATE OF CALIFORNIA

PUBLIC WORKS DEPARTMENT

THE CITY OF BRENTWOOD

ANODE TEST STATION - ELBOW

BALWINDER S. GREWAL CITY ENGINEER

DATE: JUNE 20, 2003

REVISED: DEC. 31, 2013

SHEET No.
CP-7

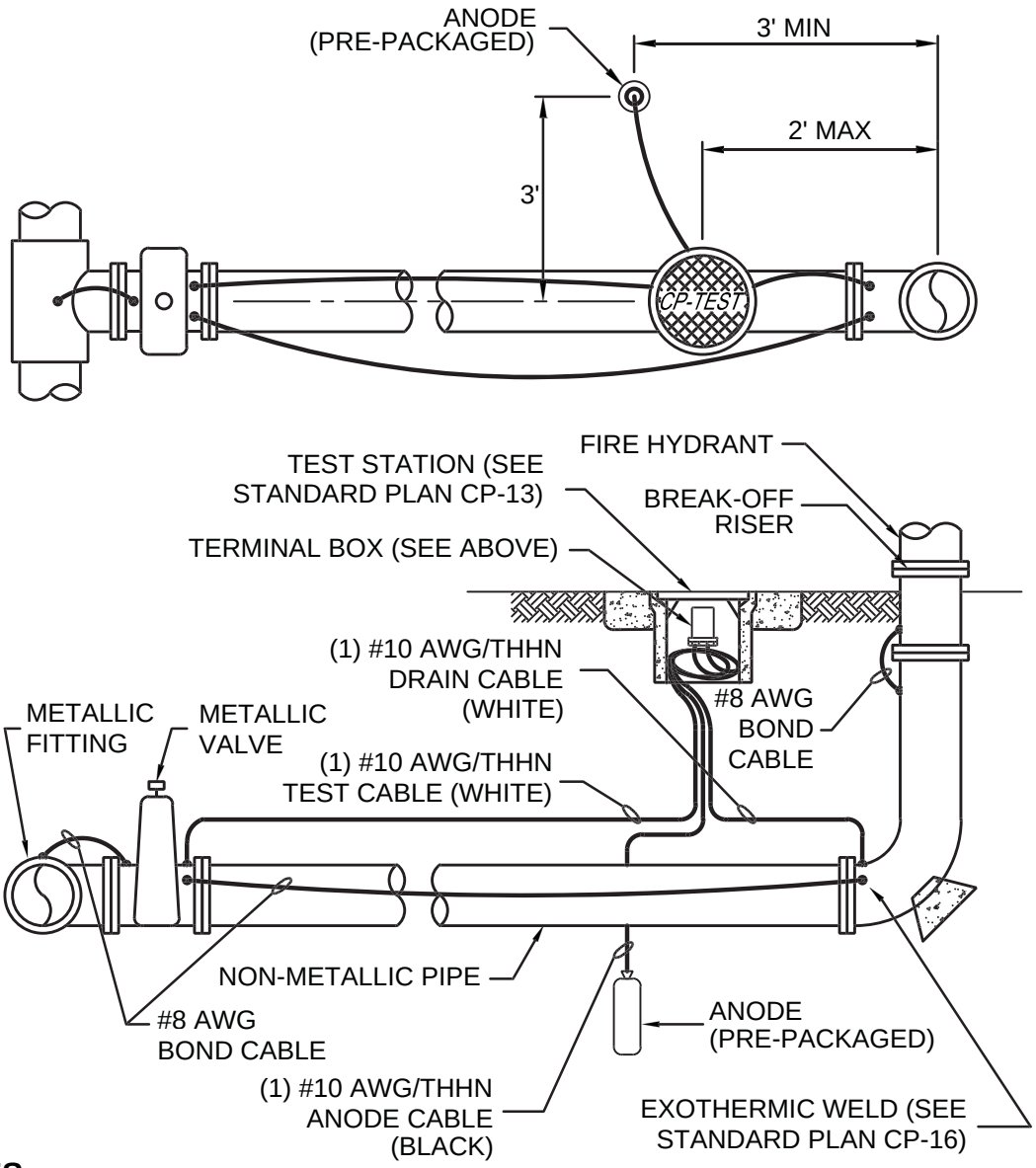

NOTES:

1. FOR TERMINAL BOX WIRING SEE STANDARDARD PLAN CP-6.
2. TEST STATION MAY BE DELETED AT THE DISCRETION OF THE CITY ENGINEER. IF THE TEST STATION IS DELETED, CONNECT THE ANODE LEAD DIRECTLY TO THE FITTING PER STANDARD PLAN CP-16.
3. ALL TEST STATIONS SHALL BE SET BEHIND CURB OR SIDEWALK.

(Not To Scale)

REGISTERED PROFESSIONAL ENGINEER
BALWINDER S. GREWAL
C 49122
EXP. 9/30/14
STATE OF CALIFORNIA

PUBLIC WORKS DEPARTMENT

THE CITY OF BRENTWOOD

ANODE TEST STATION - FIRE HYDRANT

BALWINDER S. GREWAL CITY ENGINEER

DATE: JUNE 20, 2003

REVISED: DEC. 31, 2013

SHEET No.
CP-8

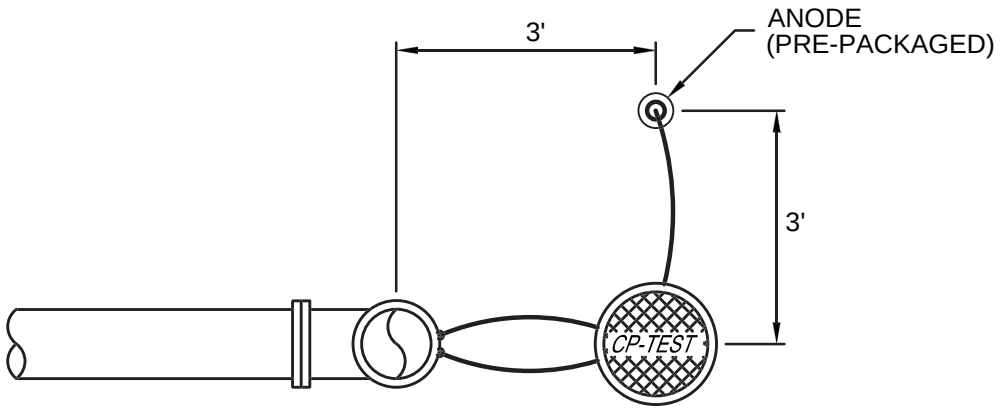

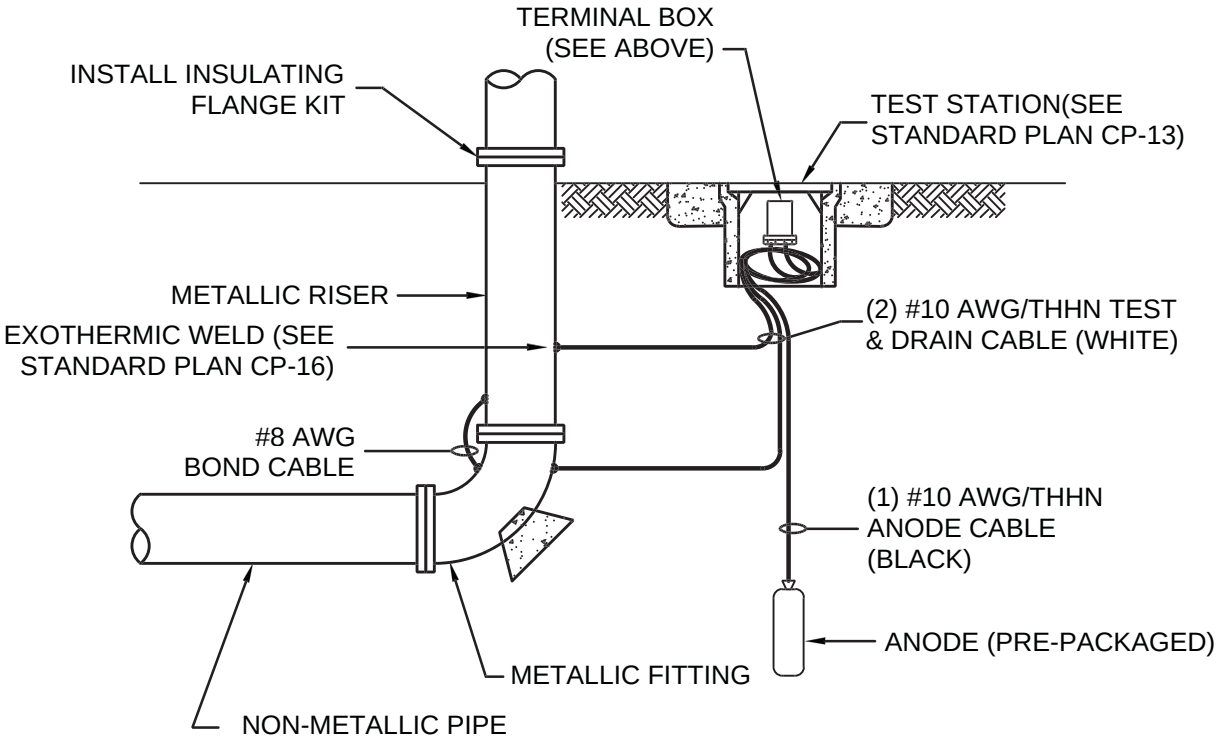

NOTES:

1. FOR TERMINAL BOX WIRING SEE STANDARD PLAN CP-6.
2. TEST STATION MAY BE DELETED AT THE DISCRETION OF THE CITY ENGINEER. IF THE TEST STATION IS DELETED, CONNECT THE ANODE LEAD DIRECTLY TO THE FITTING PER STANDARD PLAN CP-16.
3. TEST STATIONS SHALL BE SET BEHIND CURB OR SIDEWALK.

(Not To Scale)

REGISTERED PROFESSIONAL ENGINEER
BALWINDER S. GREWAL
C 49122
EXP. 9/30/14
STATE OF CALIFORNIA

PUBLIC WORKS DEPARTMENT

THE CITY OF BRENTWOOD

ANODE TEST STATION - RISER

BALWINDER S. GREWAL CITY ENGINEER

DATE:	JUNE 20, 2003	SHEET No.
REVISED:	DEC. 31, 2013	CP-9

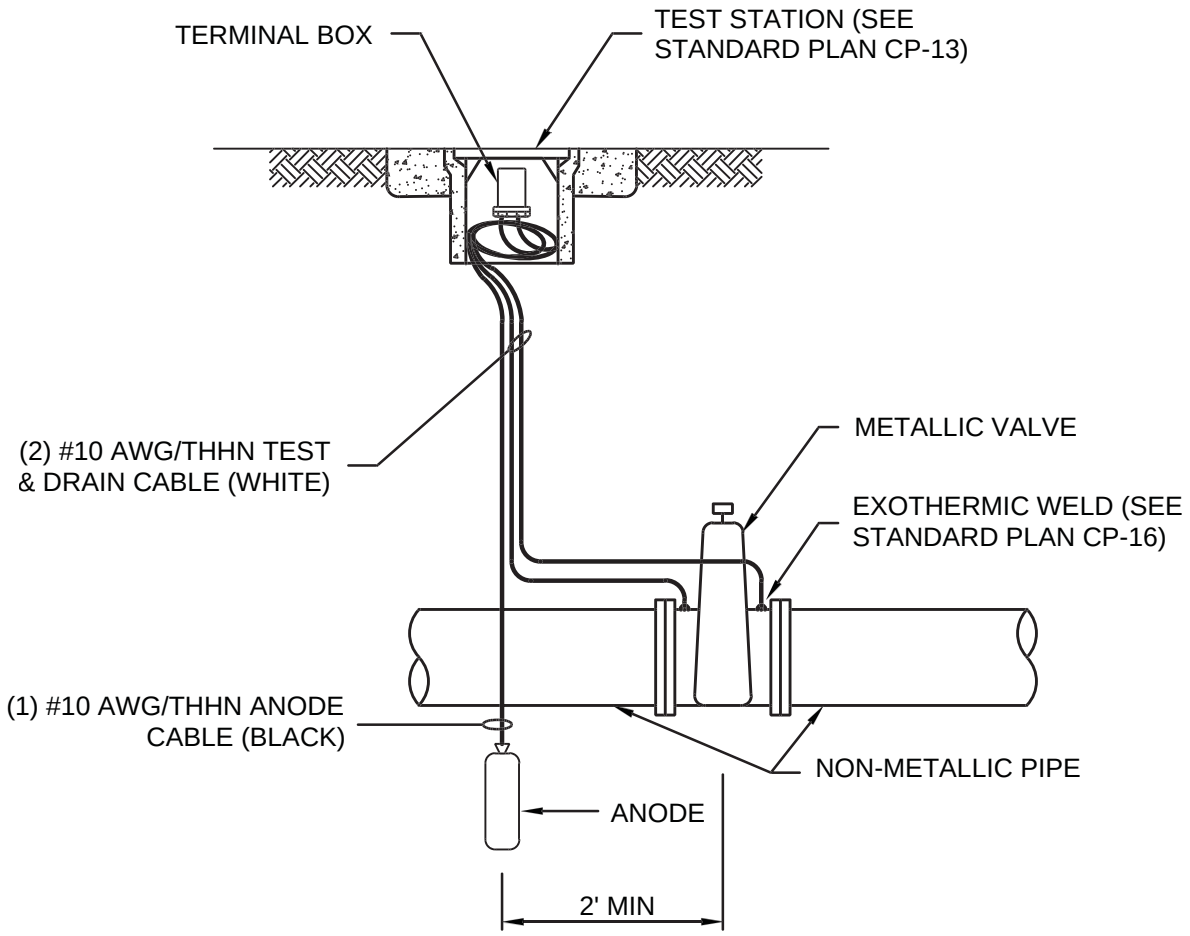

NOTES:

1. INSTALL ANODE A MINIMUM 2 FEET FROM VALVE.
2. FOR TERMINAL BOX WIRING SEE STANDARD PLAN CP-6.
3. TEST STATION SHALL BE SET BEHIND CURB OR SIDEWALK.

(Not To Scale)

REGISTERED PROFESSIONAL ENGINEER
BALWINDER S. GREWAL
C 49122
EXP. 9/30/14
STATE OF CALIFORNIA

PUBLIC WORKS DEPARTMENT

THE CITY OF BRENTWOOD

ANODE TEST STATION - VALVE

BALWINDER S. GREWAL CITY ENGINEER

DATE: OCT. 31, 2000

REVISED: DEC. 31, 2013

SHEET No.

CP-10

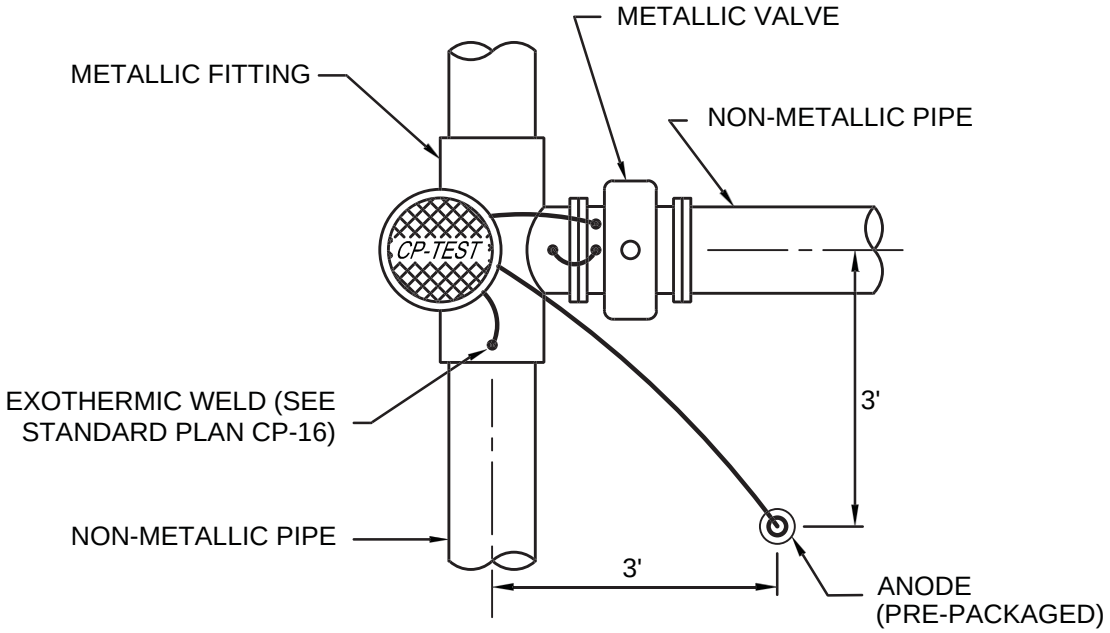

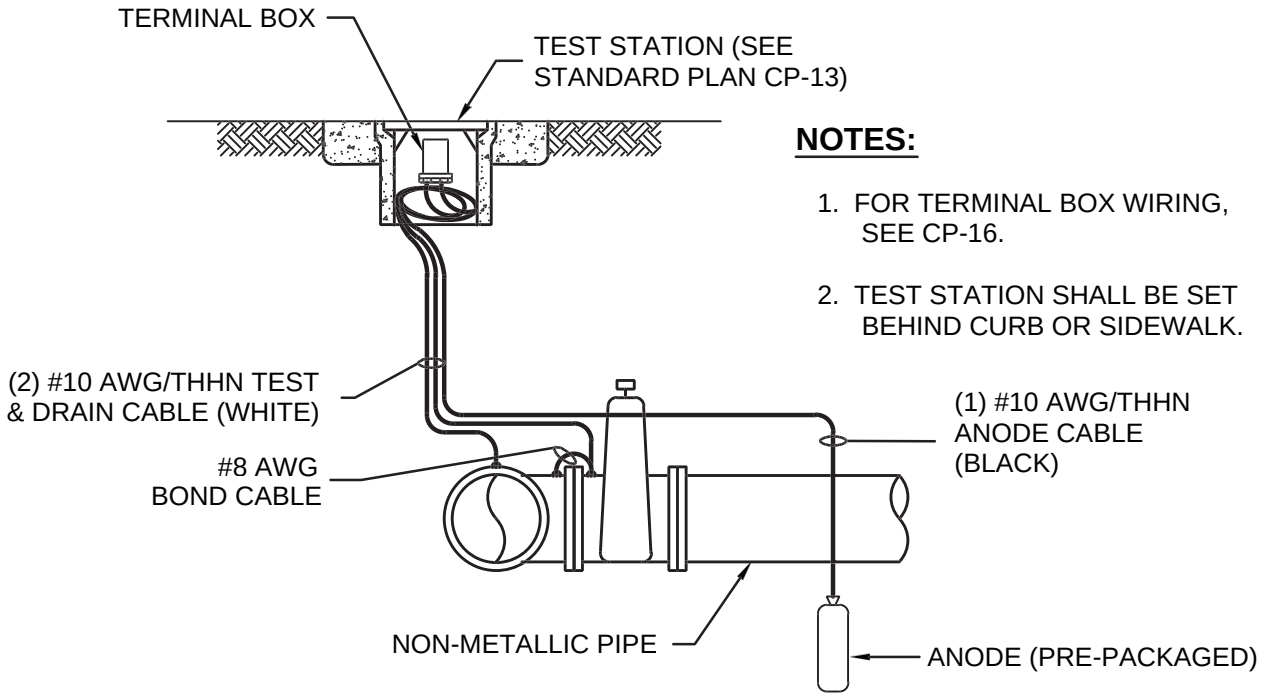

NOTES:

1. FOR TERMINAL BOX WIRING, SEE CP-16.
2. TEST STATION SHALL BE SET BEHIND CURB OR SIDEWALK.

(Not To Scale)

REGISTERED PROFESSIONAL ENGINEER
BALWINDER S. GREWAL
C 49122
EXP. 9/30/14
STATE OF CALIFORNIA

PUBLIC WORKS DEPARTMENT

THE CITY OF BRENTWOOD

ANODE TEST STATION - VALVE AND TEE

BALWINDER S. GREWAL CITY ENGINEER

DATE: JUNE 20, 2003

REVISED: DEC. 31, 2013

SHEET No. **CP-11**

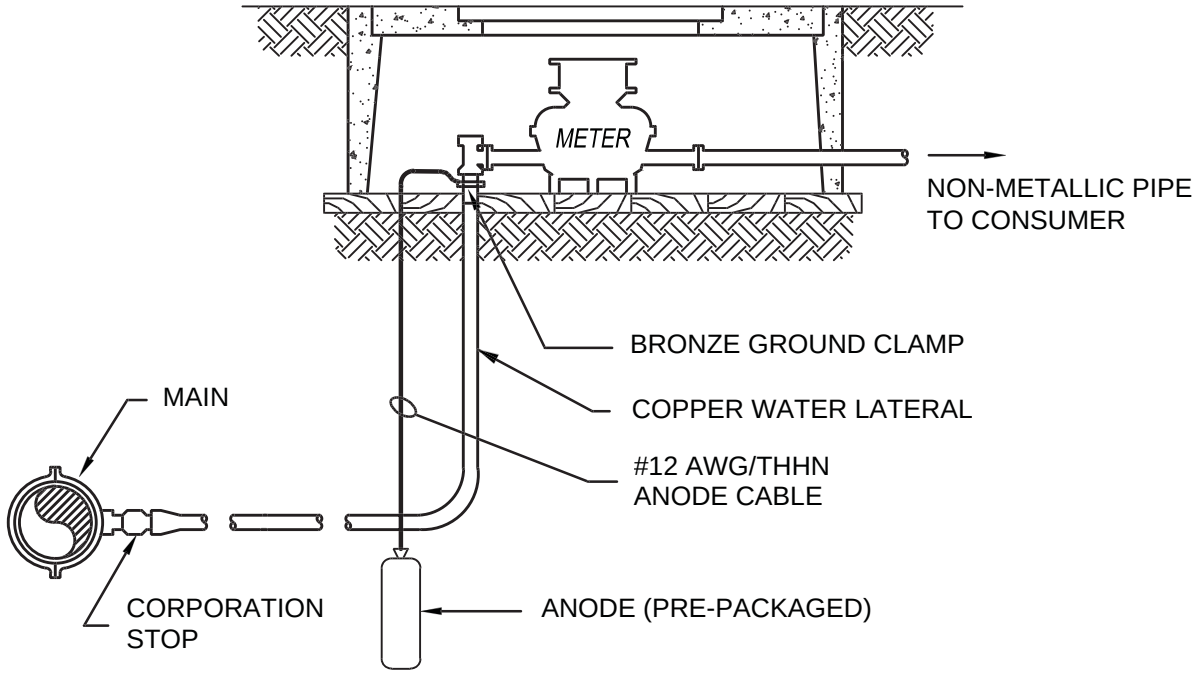

NOTES:

1. IF WATERMAIN IS METALLIC, PLACE INSULATING COUPLING BETWEEN COPPER WATER LATERAL AND WATERMAIN.
2. A MINIMUM CLEARANCE OF 2' SHALL BE MAINTAINED BETWEEN THE ANODE AND THE LATERAL.
3. TOP OF ANODE SHALL BE 5' MIN. FROM THE GROUND SURFACE.
4. TEST STATION SHALL BE SET BEHIND CURB OR SIDEWALK.

(Not To Scale)

REGISTERED PROFESSIONAL ENGINEER
BALWINDER S. GREWAL
C 49122
EXP. 9/30/14
STATE OF CALIFORNIA

PUBLIC WORKS DEPARTMENT

THE CITY OF BRENTWOOD

ANODE TEST STATION - LATERAL

BALWINDER S. GREWAL CITY ENGINEER

DATE:	JUNE 20, 2003	SHEET No.
REVISED:	DEC. 31, 2013	CP-12

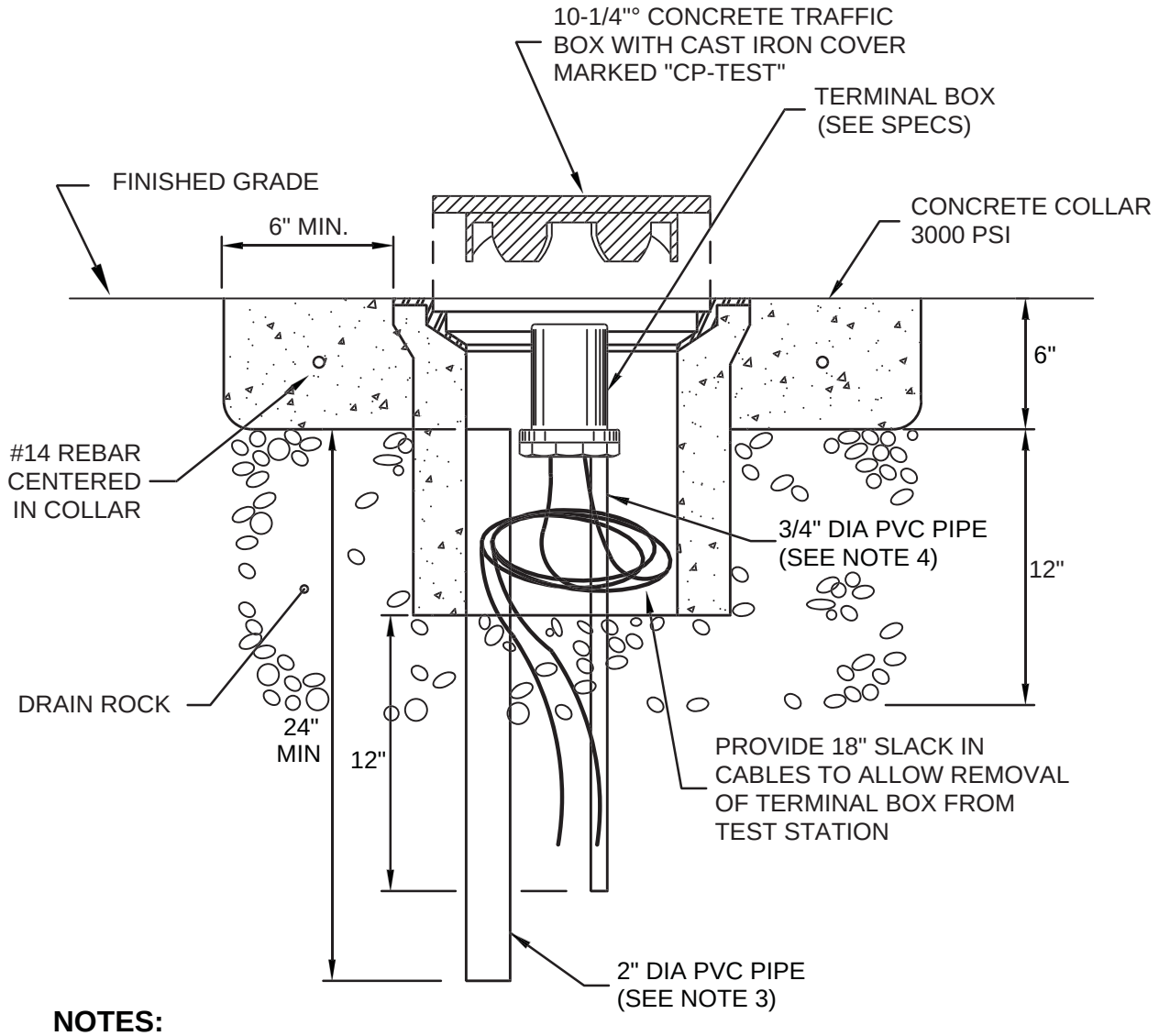

NOTES:

1. CONCRETE COLLAR IS REQUIRED FOR TEST STATIONS PLACED IN ROADWAYS AND UNPAVED AREAS.
2. TEST STATION SHALL BE SET BEHIND CURB OR SIDEWALK.
3. INSTALL 2" DIA. PVC PIPE IN CLEAN NATIVE SOIL. FILL PIPE WITH CLEAR SOIL, FREE FROM ROCKS AND DEBRIS.
4. INSTALL 18" LENGTH OF 3/4" DIA. PVC PIPE TO ENSURE THAT THE TERMINAL BOX WILL REMAIN IN THE UPRIGHT POSITION. POSITION THE PIPE SO THAT THE TERMINAL BOX WILL BE AS HIGH AS POSSIBLE WITH THE CAST IRON LID STILL CLOSING PROPERLY.

(Not To Scale)

REGISTERED PROFESSIONAL ENGINEER
BALWINDER S. GREWAL
C 49122
EXP. 9/30/14
STATE OF CALIFORNIA

PUBLIC WORKS DEPARTMENT

THE CITY OF BRENTWOOD

TEST STATION

BALWINDER S. GREWAL CITY ENGINEER

DATE: JUL. 26, 2002

REVISED: DEC. 31, 2013

SHEET No.

CP-13

BELOW GRADE INSULATING JOINT COATING

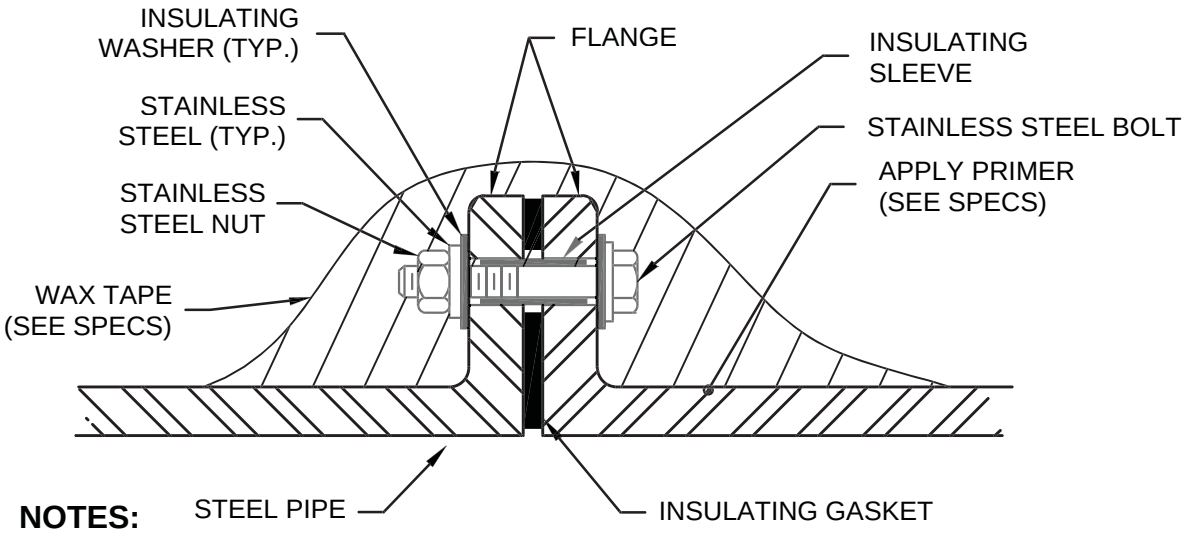

NOTES:

1. GASKET SHALL BE FOR WATER SERVICE AND BE OF SAME PRESSURE RATING AS THE FLANGE.
2. DELETE COATING IF FLANGE IS ABOVE GRADE OR INSTALLED IN A VAULT.
3. ALL BOLTS, NUTS AND WASHERS SHALL BE 304 OR 316 STAINLESS STEEL.

EXPOSED INSULATING JOINT

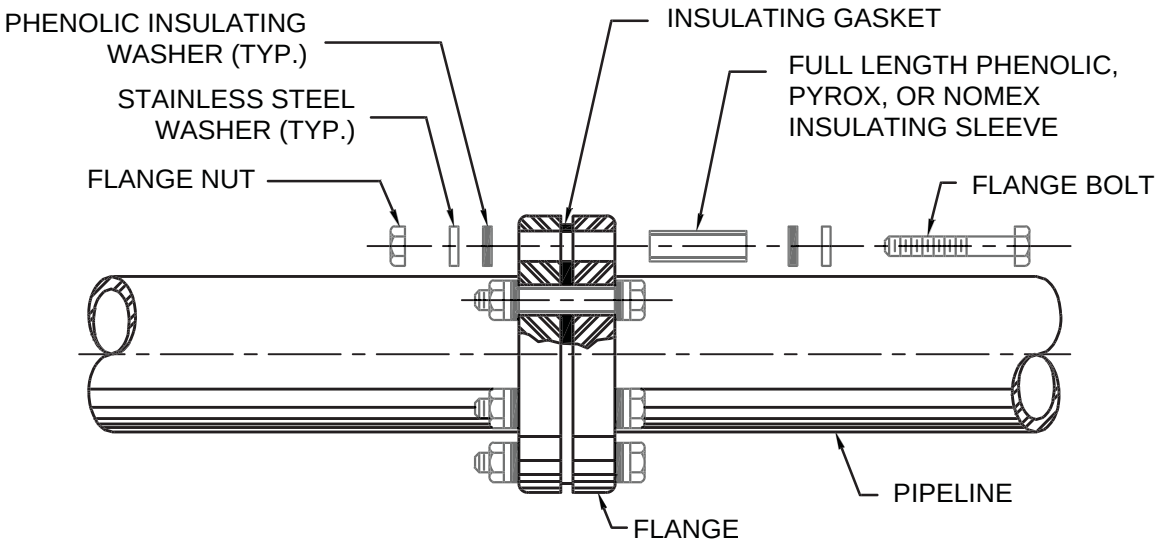

NOTE: FOR BURIED INSULATING JOINTS APPLY COATING AS SHOWN ABOVE.

(Not To Scale)

REGISTERED PROFESSIONAL ENGINEER
BALWINDER S. GREWAL
C 49122
EXP. 9/30/14
STATE OF CALIFORNIA

PUBLIC WORKS DEPARTMENT

THE CITY OF BRENTWOOD

DIELECTRIC INSULATING JOINT

BALWINDER S. GREWAL CITY ENGINEER

DATE:	JAN. 31, 1999	SHEET No.
REVISED:	DEC. 31, 2013	CP-14

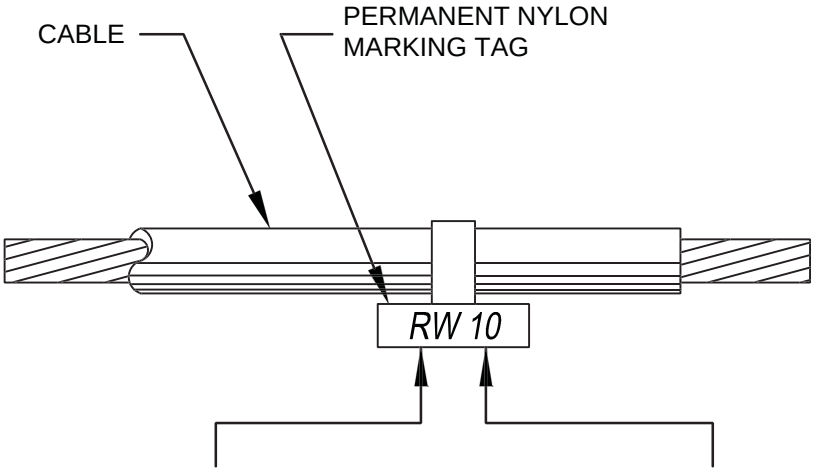

RW	—	RAW WATER
OF	—	OVERFLOW
DR	—	DRAIN
AN	—	ANODE
RE	—	REFERENCE ELECTRODE
FP	—	FOREIGN PIPELINE
CA	—	CASING
DW	—	DOMESTIC WATER
NPW	—	NON-POTABLE WATER

PIPE DIAMETER
(INCHES)

(Not To Scale)

REGISTERED PROFESSIONAL ENGINEER
BALWINDER S. GREWAL
C 49122
EXP. 9/30/14
STATE OF CALIFORNIA

PUBLIC WORKS DEPARTMENT

THE CITY OF BRENTWOOD

CABLE IDENTIFICATION

BALWINDER S. GREWAL CITY ENGINEER

DATE: JUNE 20, 2003

REVISED: DEC. 31, 2013

SHEET No.
CP-15

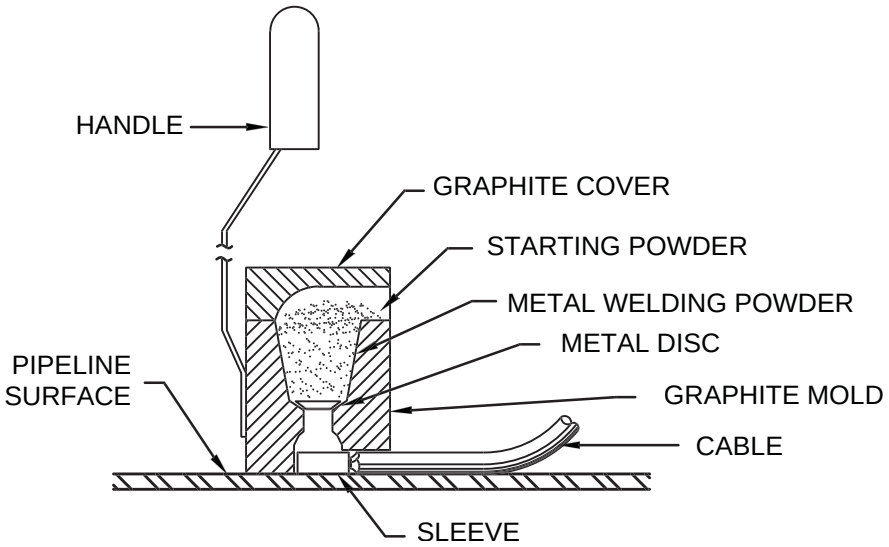

STEP 1. FILE STRUCTURE CONNECTION AREA TO BARE SHINING METAL AND CLEAN.

STEP 2. STRIP INSULATION FROM WIRE. ATTACH SLEEVE REQUIRED ON #6 AWG WIRE OR SMALLER.

STEP 3. HOLD MOLD FIRMLY WITH OPENING AWAY FROM OPERATOR AND IGNITE WITH FLINT GUN.

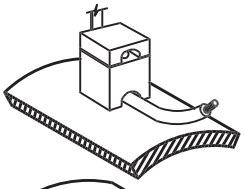

STEP 4. REMOVE SLAG FROM CONNECTION AND PEEN WELD FOR SOUNDNESS.

STEP 5. COVER CONNECTION AND EXPOSED STRUCTURE SURFACE WITH EPOXY COATING COMPOUND.

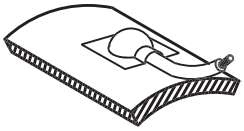

NOTE: PROCEDURE SHOWN ABOVE IS TO BE USED AS A GENERAL GUIDE ONLY. CONSULT MANUFACTURER'S LITERATURE FOR SPECIFIC INSTALLATION INSTRUCTIONS.

(Not To Scale)

REGISTERED PROFESSIONAL ENGINEER
BALWINDER S. GREWAL
C 49122
EXP. 9/30/14
STATE OF CALIFORNIA

PUBLIC WORKS DEPARTMENT

THE CITY OF BRENTWOOD

EXOTHERMIC WELD PROCESS

BALWINDER S. GREWAL CITY ENGINEER

DATE:	JAN.31, 1999
REVISED:	DEC. 31, 2013

SHEET No.
CP-16

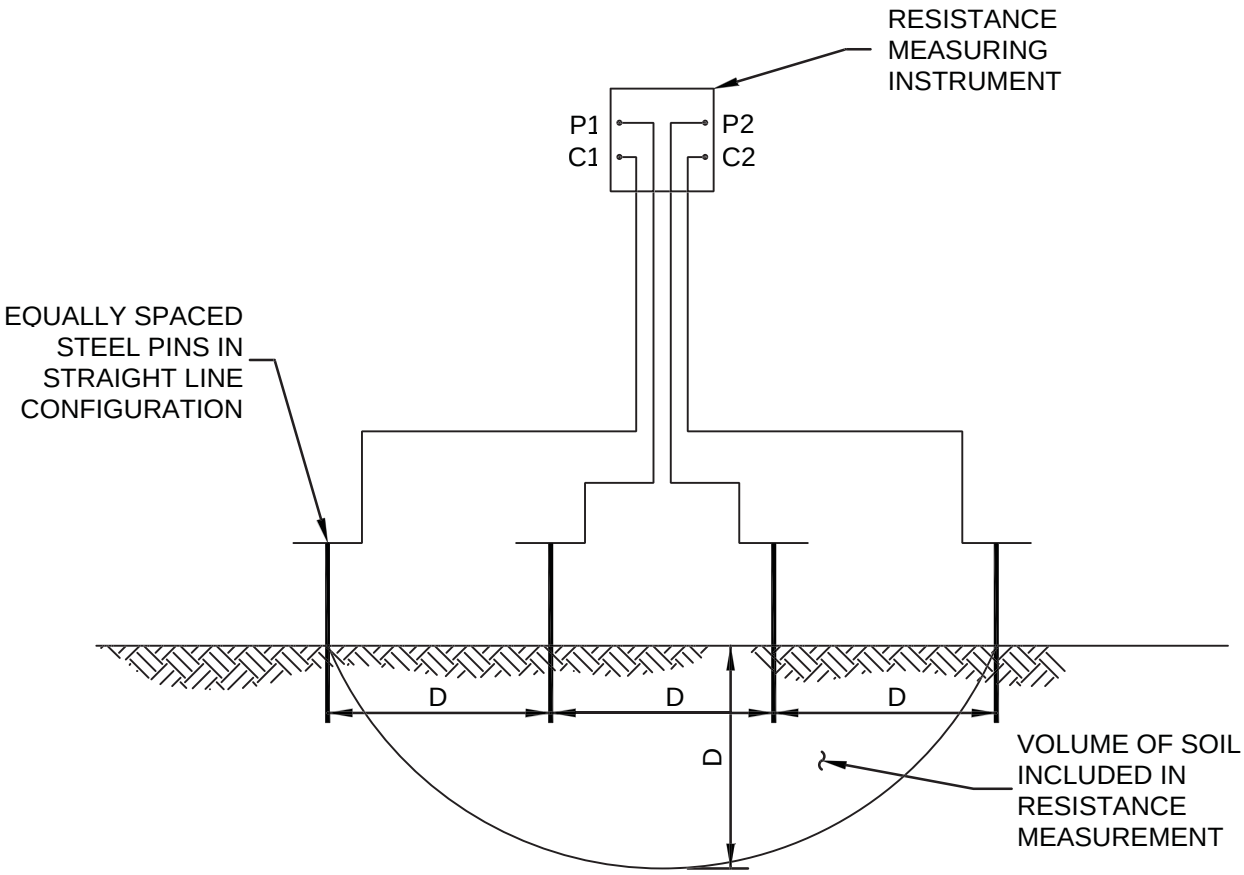

WHERE D = DEPTH TO BOTTOM OF PIPE

(Not To Scale)

REGISTERED PROFESSIONAL ENGINEER
BALWINDER S. GREWAL
C 49122
EXP. 9/30/14
STATE OF CALIFORNIA

PUBLIC WORKS DEPARTMENT

THE CITY OF BRENTWOOD

WENNER FOUR PIN RESISTIVITY TEST

BALWINDER S. GREWAL CITY ENGINEER

DATE: JAN. 31, 1999

REVISED: DEC. 31, 2013

SHEET No.

CP-17

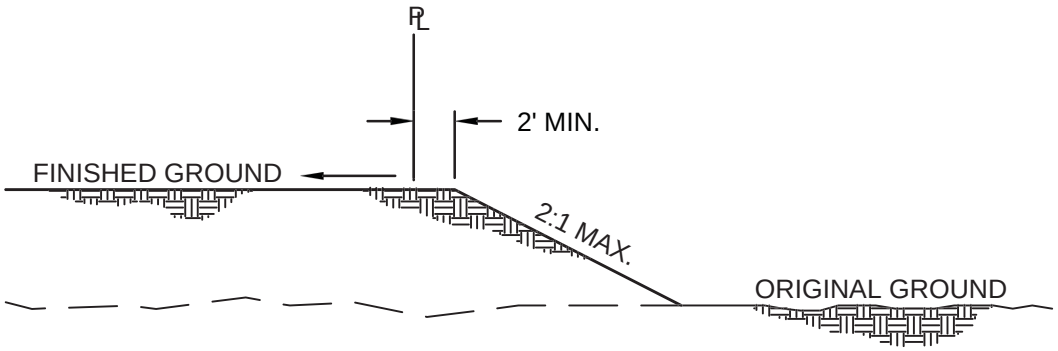

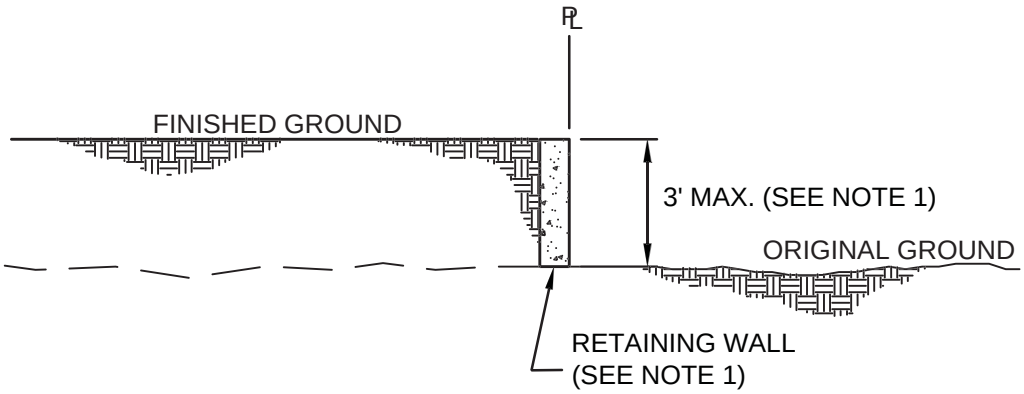

NOTES:

1. RETAINING WALLS SHALL BE 2" x 12" PRE-TREATED WOOD. RETAINING WALLS HIGHER THAN 1' SHALL BE REINFORCED CONCRETE, CONCRETE BLOCKS OR MASONRY.
2. FOR RETAINING WALLS 3' OR HIGHER,USE G-3 OR G-4 OR G-5.
3. ALL RETAINING WALLS SHALL BE APPROVED BY THE CITY ENGINEER.
4. SEE G-2 FOR CUTS ADJACENT TO EXTERIOR PERIMETER PROPERTY LINES.

(Not To Scale)

PUBLIC WORKS DEPARTMENT

THE CITY OF BRENTWOOD

EXTERIOR PERIMETER PROPERTY LINE GRADING

BALWINDER S. GREWAL CITY ENGINEER

DATE: DEC. 29, 2000

REVISED: DEC. 31, 2013

SHEET No. G-1

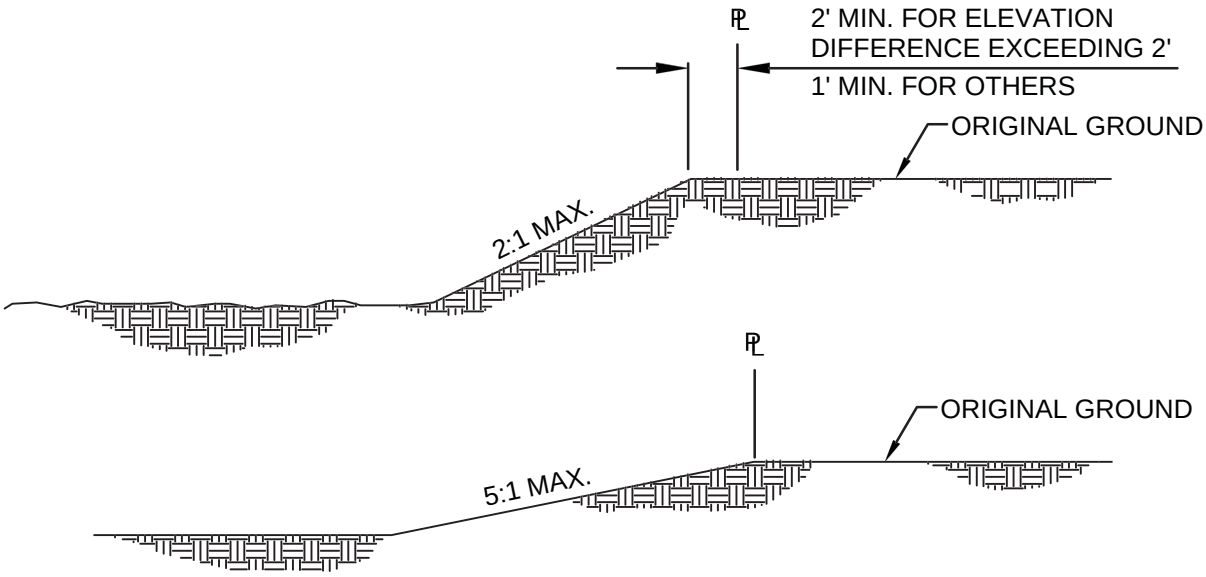

CUT BANKS

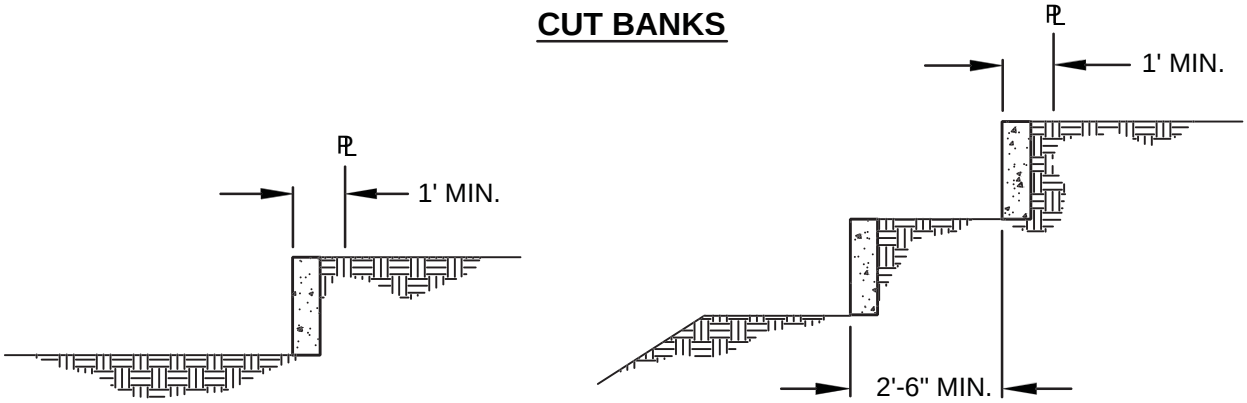

RETAINING WALLS

NOTES:

1. RETAINING WALLS HIGHER THAN 1' SHALL BE REINFORCED CONCRETE, CONCRETE BLOCKS, OR MASONRY.
2. ALL RETAINING WALLS SHALL BE APPROVED BY THE CITY ENGINEER.
3. FOR LOTS TO BE IN CONFORMANCE WITH FHA, NO DOUBLE RETAINING WALLS SHALL BE CONSTRUCTED ON SIDE YARDS.

(Not To Scale)

REGISTERED PROFESSIONAL ENGINEER
BALWINDER S. GREWAL
C 49122
EXP. 9/30/14
STATE OF CALIFORNIA

PUBLIC WORKS DEPARTMENT

THE CITY OF BRENTWOOD

INTERIOR PROPERTY LINE GRADING

BALWINDER S. GREWAL CITY ENGINEER

DATE: NOV. 30, 1998

REVISED: DEC. 31, 2013

SHEET No.
G-2

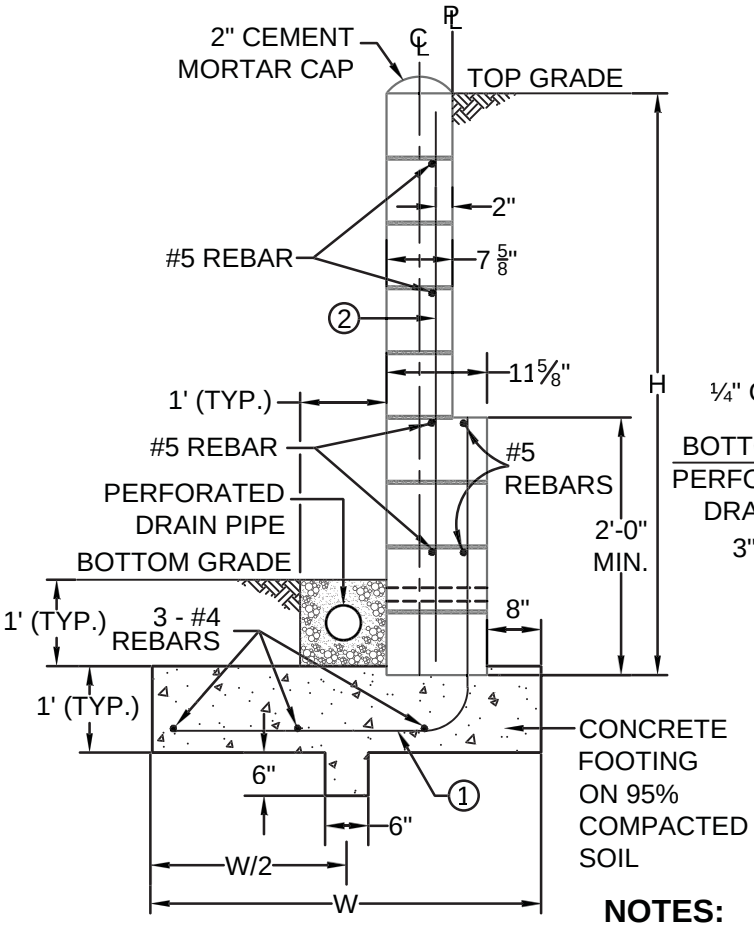

TYPE 'A' WALL
6' MAX.

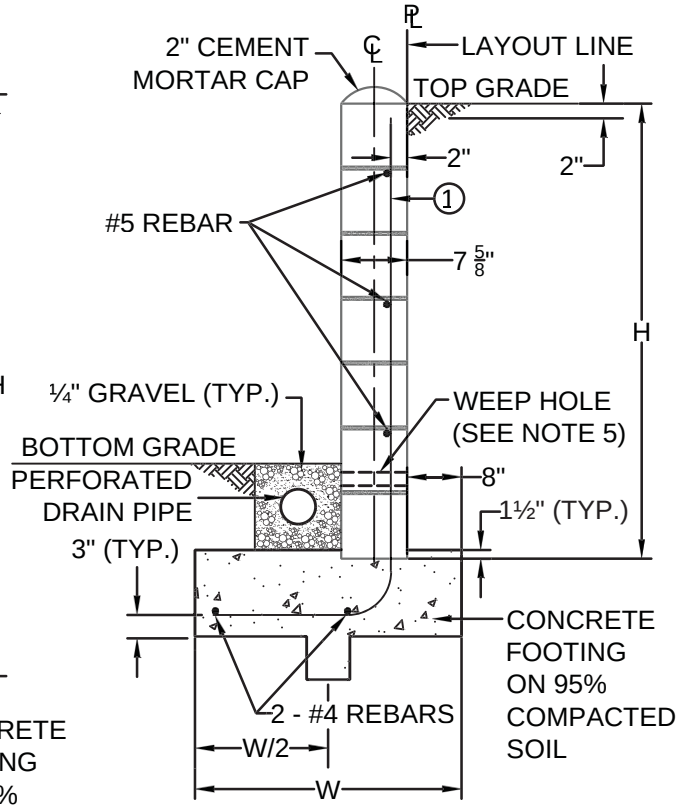

TYPE 'A' WALL
4'-8" MAX.

WALL		REBAR	
H	W	①	②
3'-4"	3'-2"	#4	-
4'-0"	3'-6"	#4	-
4'-8"	3'-10"	#4	-
5'-4"	4'-2"	#4	#4
6'-0"	4'-6"	#5	#4

NOTES:

1. DRAIN SHALL BE CONNECTED TO THE NEAREST CATCH BASIN.
2. A CLEANOUT SHALL BE PROVIDED EVERY 100'.
3. IN THE ABSENCE OF PERFORATED DRAIN PIPE, A 2"Ø SCH 40 PVC WEEPHOLES AT 25' O.C. CAN BE PROVIDED UPON CITY ENGINEER'S DISCRETION AND APPROVAL.
4. PLACE EXPANSION JOINTS AT 40' C.C. MAX. OMIT MORTAR FROM VERTICAL JOINT IN THE FIRST COURSE ABOVE PROPOSED GROUND LINE AT 32" CENTERS FOR WEEP HOLES. FILL CELLS WITH CONCRETE.
5. PROVIDE 3-4" Ø SCH 40 PVC WEEP HOLES IN THE WALL PER LOT (ON THE PROPERTY LINES AND ITS MIDPOINT).

(Not To Scale)

PUBLIC WORKS DEPARTMENT

THE CITY OF BRENTWOOD

MASONRY RETAINING WALL (TYPE A)

BALWINDER S. GREWAL CITY ENGINEER

DATE: MAR. 26, 2001
REVISED: DEC. 31, 2013

SHEET No.
G-3a

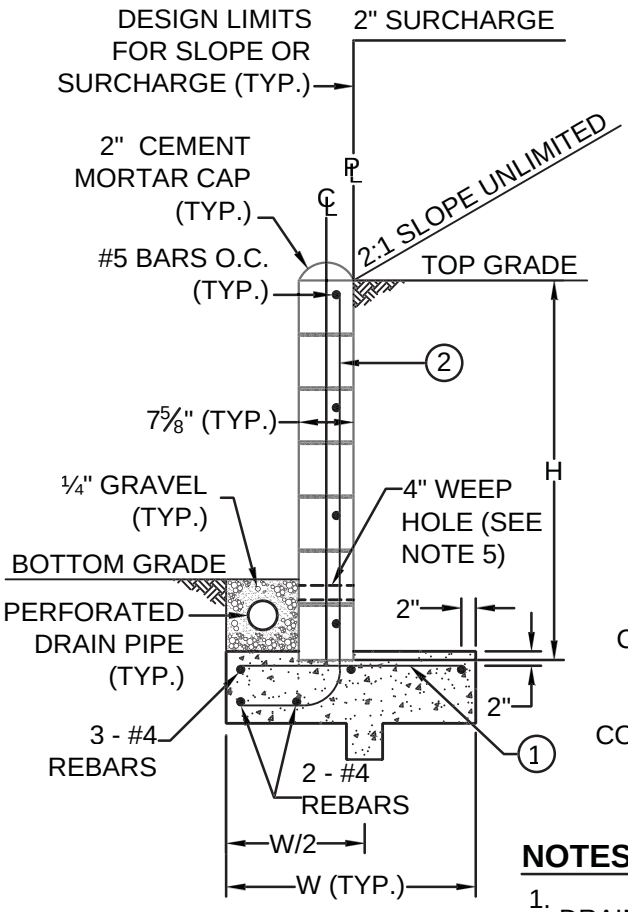

TYPE B WALL
4'-8" MAX.

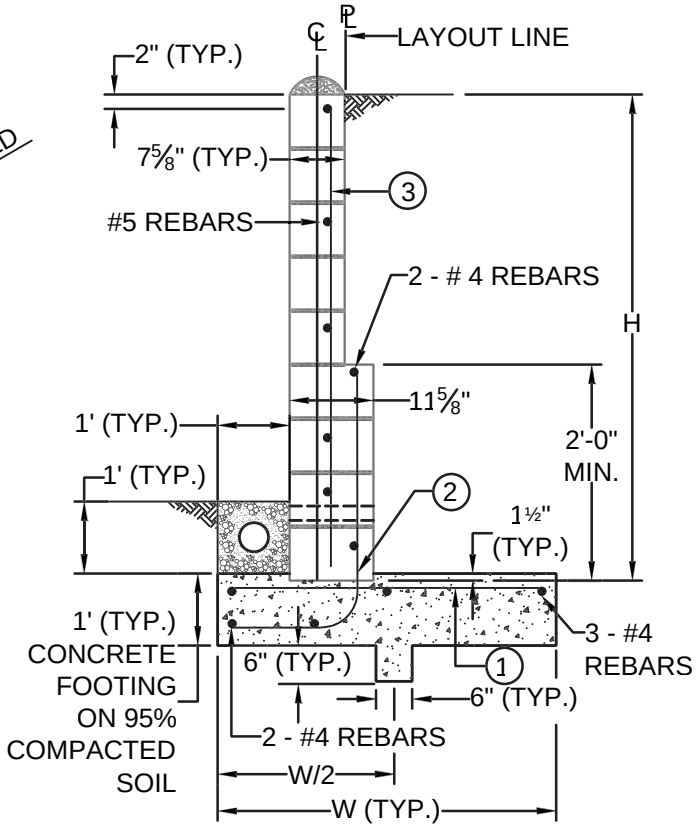

TYPE B WALL
6' MAX

WALL		REBAR		
H	W	1	2	3
3'-4"	2'-8"	#4	#4	-
4'-0"	3'-0"	#4	#4	-
4'-8"	3'-4"	#4	#4	-
5'-4"	3'-8"	#4	#4	#4
6'-0"	4'-0"	#5	#4	#4

NOTES:

1. DRAIN SHALL BE CONNECTED TO THE NEAREST CATCH BASIN.
2. A CLEANOUT SHALL BE PROVIDED EVERY 100'.
3. IN THE ABSENCE OF PERFORATED DRAIN PIPE, A 2"Ø SCH 40 PVC WEEPHOLES AT 25' O.C. CAN BE PROVIDED UPON CITY ENGINEER'S DISCRETION AND PLAN APPROVAL.
4. PLACE EXPANSION JOINTS AT 40' C.C. MAX. OMIT MORTAR FROM VERTICAL JOINT IN THE FIRST COURSE ABOVE PROPOSED GROUND LINE AT 32" CENTERS FOR WEEP HOLES. FILL CELLS WITH CONCRETE.
5. PROVIDE 3-4"Ø SCH 40 PVC WEEP HOLES IN THE WALL PER LOT (ON THE PROPERTY LINES AND ITS MIDPOINT).

(Not To Scale)

PUBLIC WORKS DEPARTMENT

THE CITY OF BRENTWOOD

MASONRY RETAINING WALL (TYPE B)

BALWINDER S. GREWAL CITY ENGINEER

DATE:	MAR. 26, 2001	SHEET No.
REVISED:	DEC. 31, 2013	G-3b

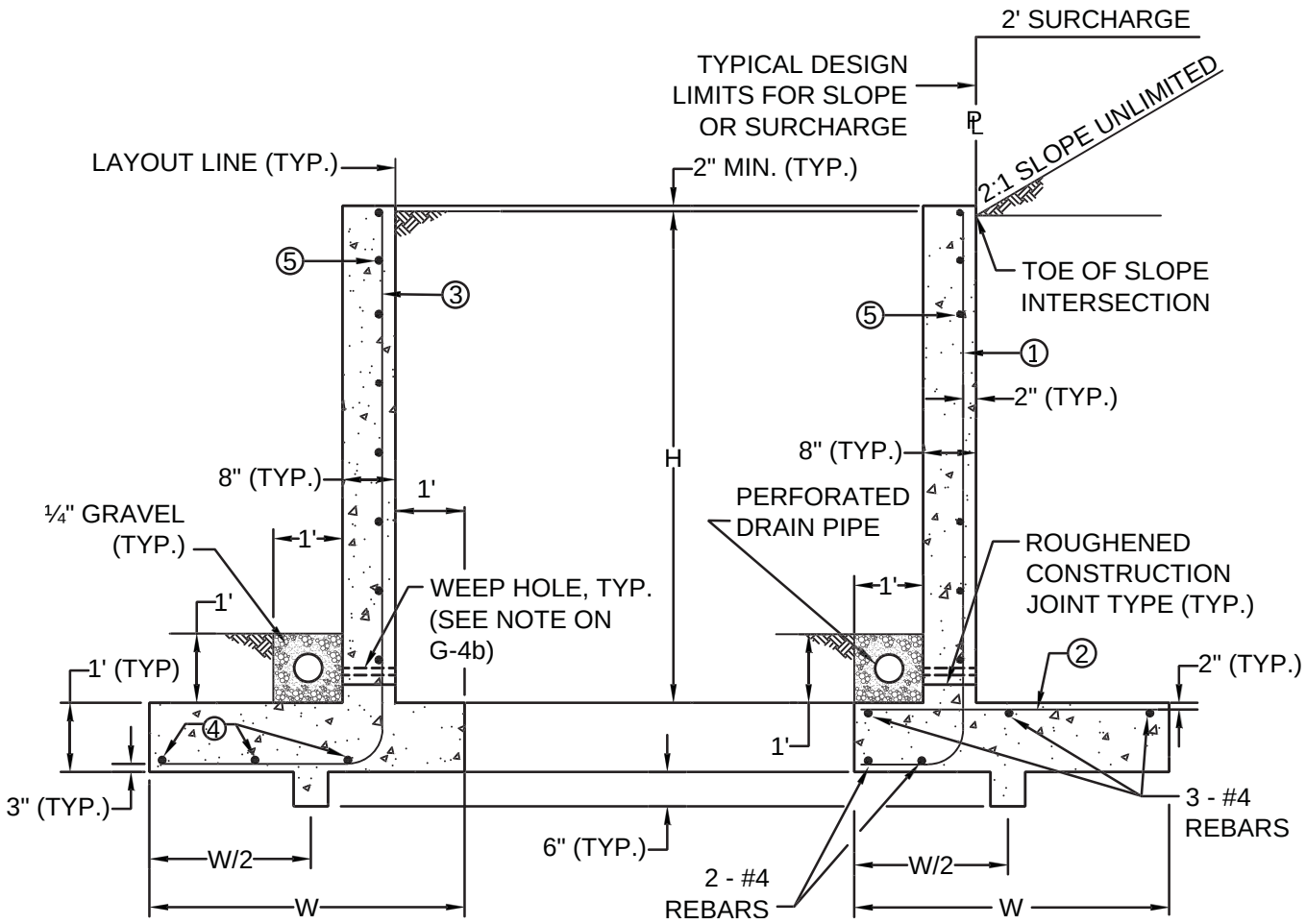

STANDARD WALL

WALL WITH SLOPE

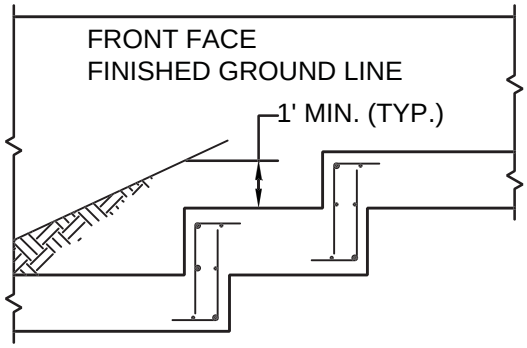

FOOTING STEP ELEVATION

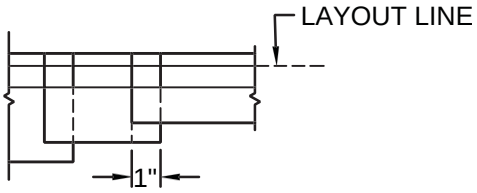

FOOTING STEP PLAN

NOTE:

SEE G-4b FOR NOTES AND DIMENSION TABLE.

(Not To Scale)

REGISTERED PROFESSIONAL ENGINEER
BALWINDER S. GREWAL
C 49122
EXP. 9/30/14
STATE OF CALIFORNIA

PUBLIC WORKS DEPARTMENT

THE CITY OF BRENTWOOD

REINFORCED CONCRETE RETAINING WALL

BALWINDER S. GREWAL CITY ENGINEER

DATE: MAR. 26, 2001

REVISED: DEC. 31, 2013

SHEET No. **G-4a**

NOTES:

1. DRAIN SHALL BE CONNECTED TO THE NEAREST CATCH BASIN.

2. A CLEANOUT SHALL BE PROVIDED EVERY 100'.

3. IN THE ABSENCE OF PERFORATED DRAIN PIPE, A 2"Ø SCH 40 PVC WEEP HOLES AT 25' O.C. CAN BE PROVIDED UPON CITY ENGINEER'S DISCRETION AND PLAN APPROVAL.

4. PLACE EXPANSION JOINTS AT 40' C.C MAX. OMIT MORTAR FROM VERTICAL JOINT IN THE FIRST COURSE ABOVE PROPOSED GROUND LINE AT 32" CENTERS FOR THE WEEP HOLES. FILL CELLS WITH CONCRETE.

5. PROVIDE 3-4"Ø SCH 40 PVC WEEP HOLES IN THE WALL PER LOT (ON THE PROPERTY LINES AND ITS MIDPOINT).

DIMENSION TABLE

		STANDARD WALL			WALL WITH SLOPE		
H	5	W	3	4	W	1	2
3'-4"	#4 @ 12"	3'-2"	#4 @ 18"	2-#4	2'-8"	#4 @ 16"	#4 @ 16"
4'-0"	#4 @ 12"	3'-6"	#4 @ 18"	2-#4	3'-0"	#4 @ 16"	#4 @ 16"
4'-8"	#4 @ 12"	3'-10"	#4 @ 14"	2-#4	3'-4"	#5 @ 16"	#4 @ 16"
5'-4"	#4 @ 12"	4'-2"	#4 @ 10"	3-#4	3'-8"	#5 @ 16"	#4 @ 16"
6'-0"	#4 @ 12"	4'-6"	#5 @ 12"	3-#4	4'-0"	#4 @ 8"	#5 @ 16"

(Not To Scale)

REGISTERED PROFESSIONAL ENGINEER
BALWINDER S. GREWAL
C 49122
EXP. 9/30/14
STATE OF CALIFORNIA

PUBLIC WORKS DEPARTMENT

THE CITY OF BRENTWOOD

REINFORCED CONCRETE RETAINING WALL NOTES

BALWINDER S. GREWAL CITY ENGINEER

DATE: MAR. 26, 2001

REVISED: DEC. 31, 2013

SHEET No.
G-4b

ITEM	MANUFACTURER/MODEL (OR APPROVED EQUAL)
BACKFLOW PREVENTER	FEBCO 825Y-BV
GATE VALVE	NIBCO 619 RW
BALL VALVE	BRASS OR SCH 80 PVC TRUE UNION TYPE
QUICK COUPLING VALVE	44 RLC (RECLAIMED WATER USE), RAINBIRD 44NP 1"
PRESSURE REDUCING VALVE	WILKINS
REMOTE CONTROL VALVE	RAINBIRD PEB SERIES OR EFB-CP SERIES
VALVE BOXES IN PLANTING AREAS WITH STAINLESS STEEL LOCK-DOWN BOLTS	BROOKS 1419-12
GATE & QC VALVE BOX W/ STAINLESS STEEL LOCK-DOWN BOLTS	BROOKS 10" ROUND (# 1100 OR # 910)
VALVE BOXES IN PAVED AREAS	CHRISTY, B9X WITH C.I. TRAFFIC LID
CONTROLLER	MAXICOM COMPONENT RAINMASTER EVOLUTION (ETS ASSEMBLY)
CONTROLLER ENCLOSURE	TOP ENTRY STRONG BOX -SS
BACKFLOW ENCLOSURE	LEMEUR, GUARD SHACK CGS SERIES OR STRONGBOX (STAINLESS STEEL)
SHRUB STREAM ROTOR	RAINBIRD
POP-UP STREAM ROTOR	RAINBIRD OR TORO
GEAR DRIVEN ROTARY	HUNTER OR TORO
LAWN POP-UP SPRAY	RAINBIRD 1800 (PRS) OR TORO 6" POP-UP
SHRUB POP-UP SPRAY	RAINBIRD 1800 (PRS) OR TORO 6" & 12" POP-UP
BUBBLER	TORO 570 ZPRX

(Not To Scale)

REGISTERED PROFESSIONAL ENGINEER
BALWINDER S. GREWAL
C 49122
EXP. 9/30/14
STATE OF CALIFORNIA

PUBLIC WORKS DEPARTMENT

THE CITY OF BRENTWOOD

IRRIGATION EQUIPMENT LIST

BALWINDER S. GREWAL CITY ENGINEER

DATE: JUNE 20, 2003

REVISED: DEC. 31, 2013

SHEET No. I-1

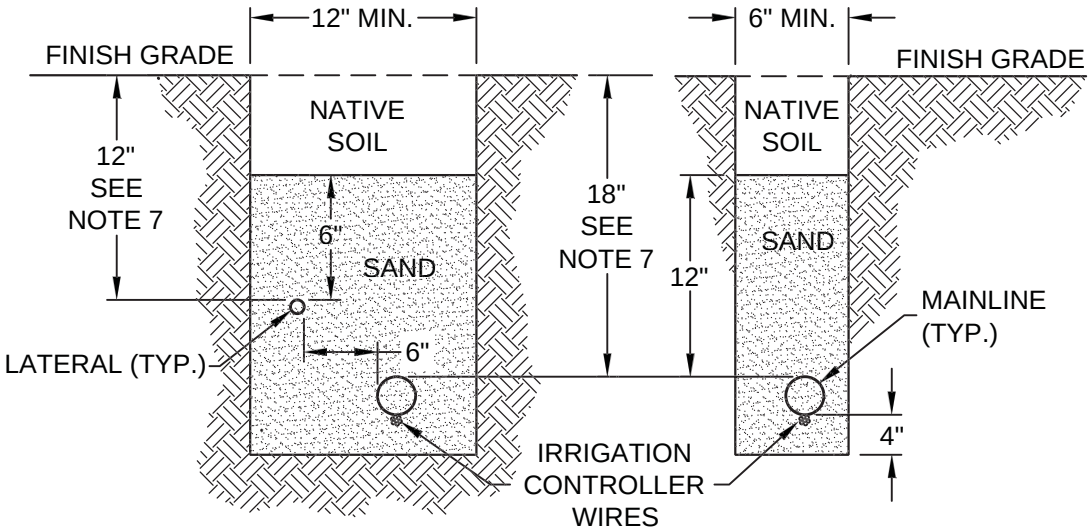

LATERAL AND MAIN **MAIN ONLY**

NOTES:

1. INSTALL 3" WIDE DETECTABLE WARNING TAPE 12" MIN ABOVE MAINLINE.
2. SALVAGED EXCAVATED FILL COMPACTED TO ORIGINAL DENSITY IN LANDSCAPED AREAS ONLY; ALL OTHER AREAS SHALL BE AT 95% COMPACTION AND AT 2% OPTIMUM MOISTURE.
3. FOR ANY PIPE UNDER PAVEMENT, SEE ST-25.
4. THE pH VALUE OF ALL BACKFILL MATERIAL SHALL BE TESTED TO BE WITHIN 6.5 TO 7.5 RANGE.
5. IRRIGATION CONTROLLER WIRES SHALL BE INSTALLED UNDER MAIN LINE AS SHOWN.
6. INSTALL 10 GAUGE INSULATED LOCATION WIRE TAPED TO PIPE EVERY 10'.
7. WHEN 8" - 12" SPRINKLER HEADS ARE USED, MAIN LINE DEPTH FROM THE FINISH GRADE SHALL INCREASE TO 24" AND LATERALS TO 18".

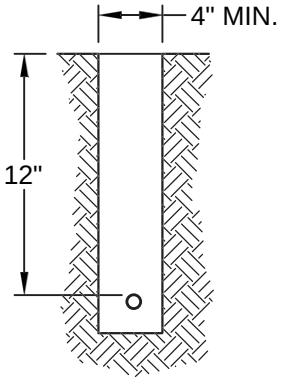

LATERAL ONLY

(Not To Scale)

REGISTERED PROFESSIONAL ENGINEER
BALWINDER S. GREWAL
C 49122
EXP. 9/30/14
STATE OF CALIFORNIA

PUBLIC WORKS DEPARTMENT

THE CITY OF BRENTWOOD

IRRIGATION SYSTEM TRENCHING

BALWINDER S. GREWAL CITY ENGINEER

DATE:	JUNE 16, 2003	SHEET No.
REVISED:	DEC. 31, 2013	I-2

NOTES:

CARE SHALL BE TAKEN WHEN PIPE INSTALLATION IS REQUIRED WITHIN EXISTING TREE ROOT AREAS. AVOID TRENCHING WITHIN DRIPLINE OF TREES WHERE POSSIBLE. WHEN NOT POSSIBLE, THE FOLLOWING PROCEDURES SHALL BE FOLLOWED:

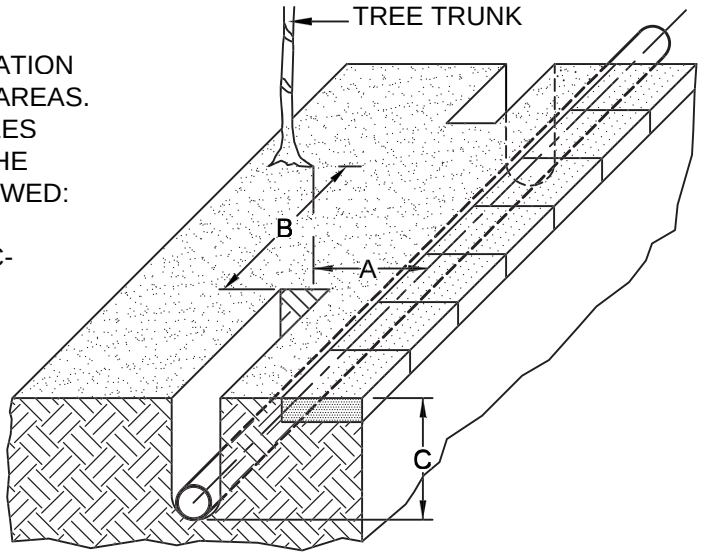

1. OPEN TRENCHES CAN BE DUG MECHANICALLY UNTIL REACHING THE DRIPLINE OF THE TREE. TRENCHES WITHIN THE DRIPLINE OF THE TREE SHOULD BE CONTINUED BY HAND. DAMAGED ROOTS OVER 1-1/2" IN DIAMETER SHALL BE CUT LEAVING A CLEAN, SMOOTH SURFACE. ROOTS OVER 4" IN DIAMETER SHALL BE CAREFULLY HAND DUG UNDER. IF MANY ROOTS ARE CUT, THE TOP OF THE TREE SHOULD BE THINNED PROPORTIONALLY; CONSULT WITH LANDSCAPE ARCHITECT OR ARBORIST PRIOR TO THINNING.

2. IF PIPE INSTALLATION IS TO PASS BY THE TREE TRUNK WITHIN DIMENSION "A", THEN TRENCH FROM OPPOSITE SIDES OF THE TREE UNTIL DIMENSION "B" IS REACHED. A TUNNEL IS THEN TO BE AUGURED BETWEEN THESE TRENCHES AT THE CORRESPONDING DIMENSION "C" DEPTH AND PIPE INSTALLED. TO AVOID POSSIBLE TAP ROOTS, NEVER TUNNEL DIRECTLY BELOW TREE TRUNK.

3. ONCE THE ABOVE PROCEDURES ARE COMPLETED, IMMEDIATELY INSTALL PIPES, CONTROL WIRE, ETC., BACKFILL TRENCH AND SOAK.

TREE DIAMETER		DISTANCE OF TUNNEL FROM EACH SIDE OF TREE TRUNK "A"		DISTANCE OF OPEN TRENCH FROM TREE TRUNK "B"		DEPTH OF TUNNEL OR TRENCH "C"	
mm	in	m	ft	m	ft	m	ft
50	2	0.6	2	0.9	3	0.9	3.00
75	3	0.9	3	1.8	6	1.0	3.25
150	6	1.5	5	3.0	10	1.0	3.33
300	12	1.8	6	3.6	12	1.1	3.67
450	18	2.1	7	4.2	14	1.2	4.00
600	24	2.4	8	4.8	16	1.3	4.33
750	30	2.7	9	5.5	18	1.4	4.67
900	36	3.0	10	6.0	20	1.5	4.83
1050	42	3.6	12	6.6	22	1.5	5.00

(Not To Scale)

REGISTERED PROFESSIONAL ENGINEER
BALWINDER S. GREWAL
C 49122
EXP. 9/30/14
STATE OF CALIFORNIA

PUBLIC WORKS DEPARTMENT

THE CITY OF BRENTWOOD

TUNNELING

BALWINDER S. GREWAL CITY ENGINEER

DATE: MAY 28, 1999
REVISED: DEC. 31, 2013

SHEET No.
I-3

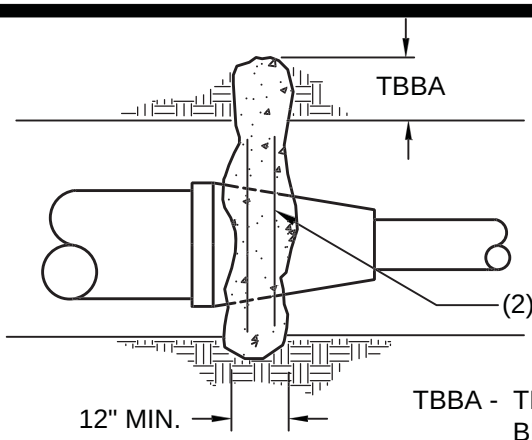

REDUCERS

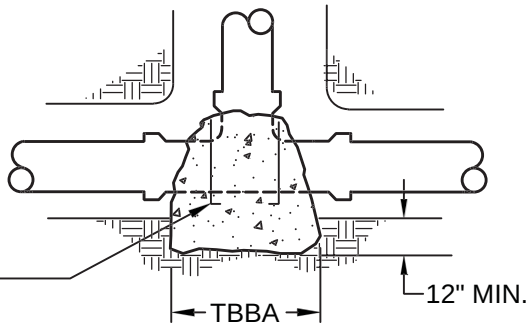

TEES & DEAD ENDS

TBBA - THRUST BLOCK BEARING AREA CALCULATED USING 125 P.S.I. TEST PRESSURE AND 1000 LBS./SO. FT. SOIL BEARING LOAD

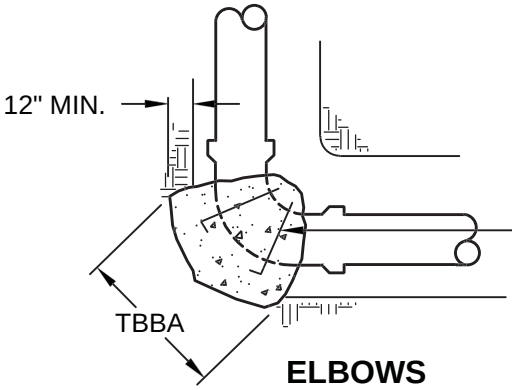

ELBOWS

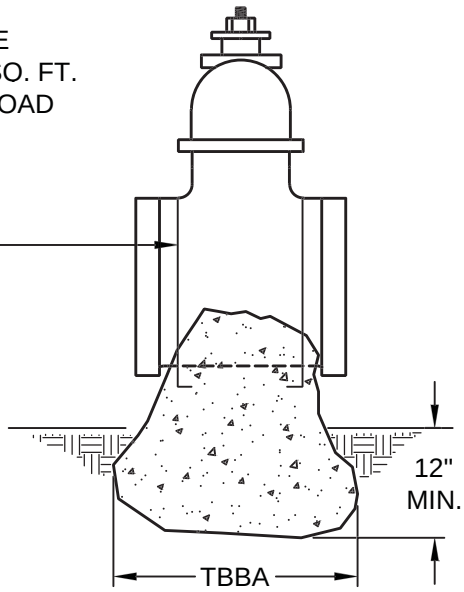

VALVES

NOTES:

1. THRUST BLOCKS SHALL NOT PROJECT HIGHER THAN 1/2 THE DISTANCE FROM THE BOTTOM OF THE TRENCH TO FINISH GRADE.
2. DO NOT COVER ENDS OF FITTINGS OR BOLTS WITH CONCRETE.
3. CONCRETE SHALL HAVE COMPRESSION STRENGTH OF 2000 PSI.
4. CONSULT MANUFACTURER'S LITERATURE FOR RECOMMENDED THRUST BEARING AREA (TBBA) BASED ON ACTUAL FIELD CONDITIONS. AT MINIMUM, TBBA SHALL BE SIZED AS FOLLOWS:

PIPE SIZE	90-DEGREE ELLS	45-DEGREE ELLS	VALVES, TEES REDUCERS, DEAD ENDS
4"	1.5 SQ. FT.	1.0 SQ.FT.	1.0 SQ. FT.*
6"	3.5 SQ. FT.	2.5 SQ. FT.	2.5 SQ. FT.*
8"	6.3 SQ. FT.	4.5 SQ. FT.	4.5 SQ. FT.*

* OR AS DESIGNED BY THE ENGINEER

(Not To Scale)

REGISTERED PROFESSIONAL ENGINEER
BALWINDER S. GREWAL
C 49122
EXP. 9/30/14
STATE OF CALIFORNIA

PUBLIC WORKS DEPARTMENT

THE CITY OF BRENTWOOD

IRRIGATION SYSTEM THRUST BLOCKING

BALWINDER S. GREWAL CITY ENGINEER

DATE: APRIL 15, 1999

REVISED: DEC. 31, 2013

SHEET No. I-4

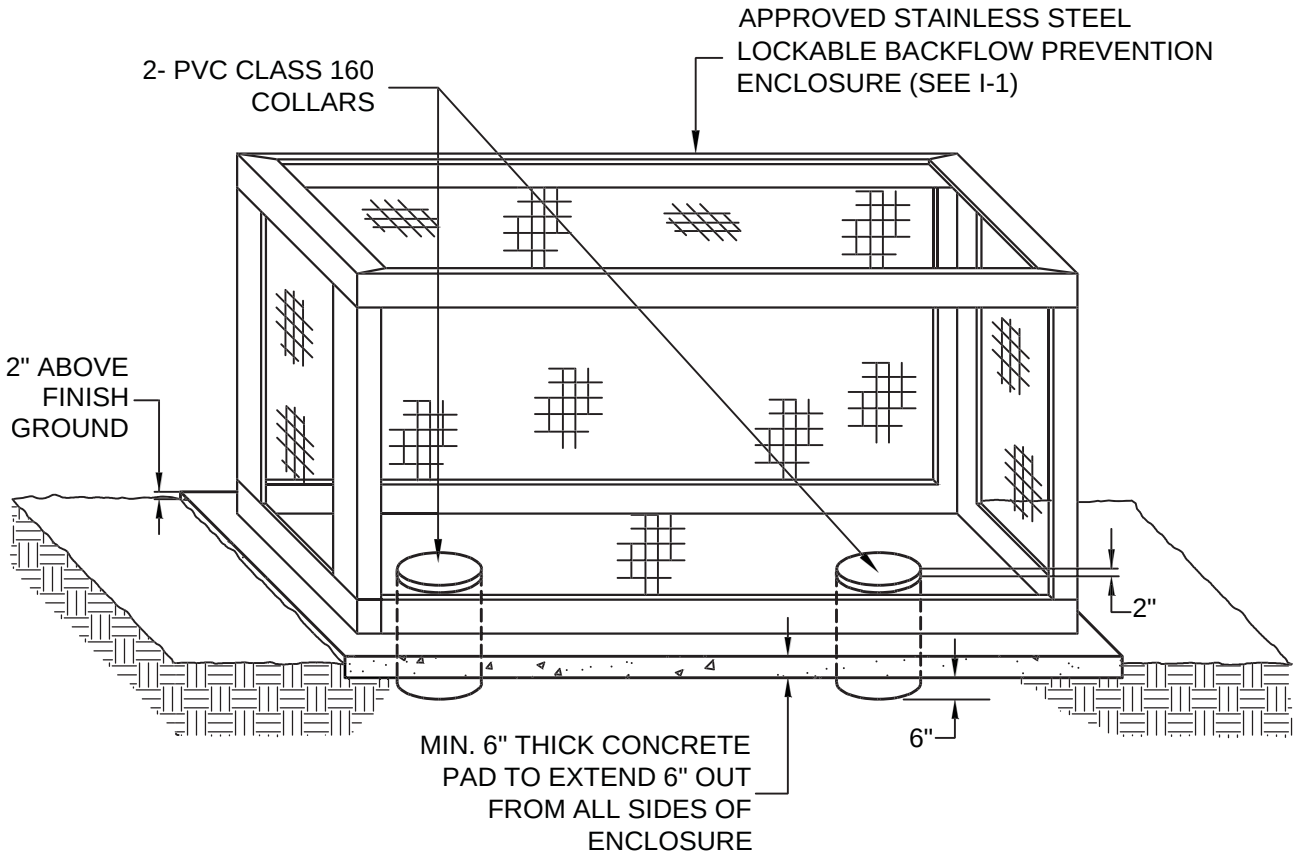

NOTES:

1. ON SLOPES: PADS SHALL BE OF SUFFICIENT THICKNESS TO EXTEND 3" BELOW THE LOWEST POINT OF THE FINISH GRADE.
2. EMBED CORNER HOLD-DOWN ASSEMBLIES IN CONCRETE EQUIPMENT PAD PER MANUFACTURER'S SPECIFICATIONS.
3. SIZE ENCLOSURE TO PROVIDE A MINIMUM OF 6" CLEARANCE BETWEEN BACKFLOW DEVICE AND ENCLOSURE.

(Not To Scale)

REGISTERED PROFESSIONAL ENGINEER
BALWINDER S. GREWAL
C 49122
EXP. 9/30/14
STATE OF CALIFORNIA

PUBLIC WORKS DEPARTMENT

THE CITY OF BRENTWOOD

BACKFLOW PREVENTER ENCLOSURE

BALWINDER S. GREWAL CITY ENGINEER

DATE:	JUNE 20, 2003	SHEET No.
REVISED:	DEC. 31, 2013	I-5

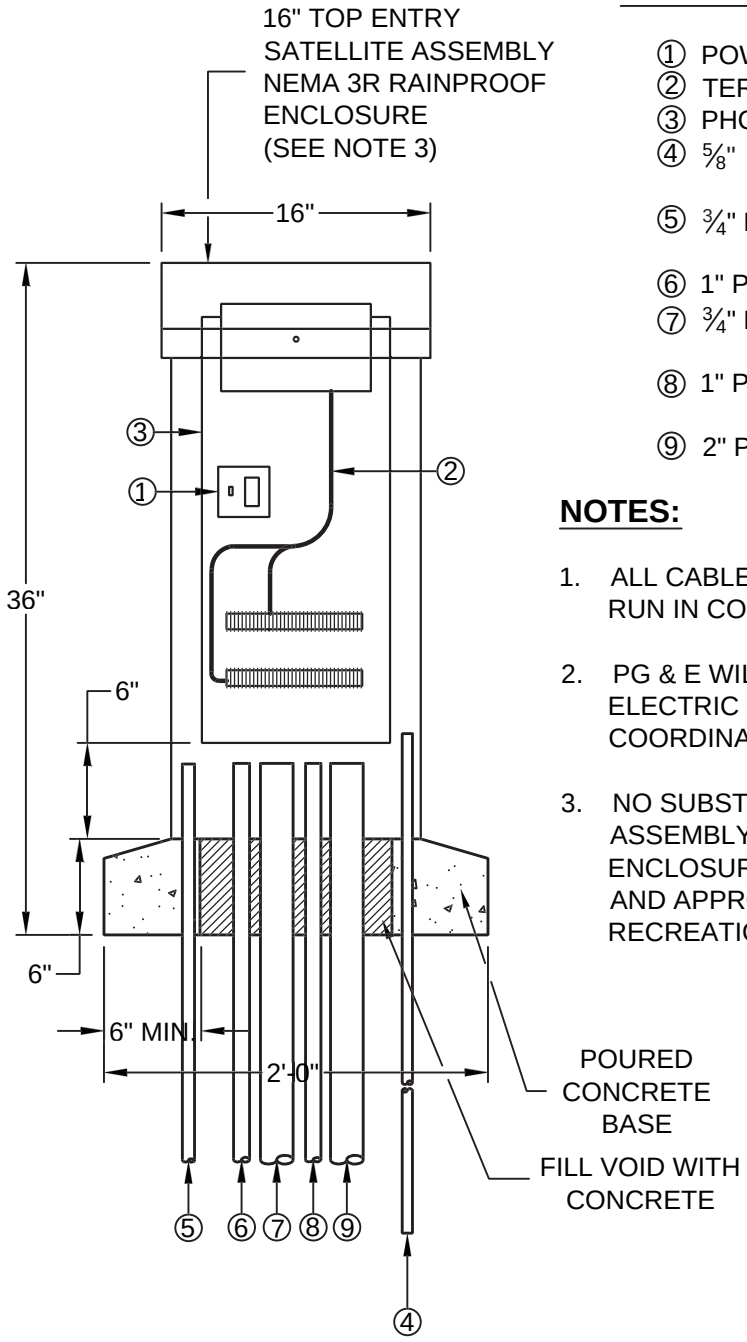

LEGEND:

① POWER SWITCH/GFI RECEPTACLE
② TERMINAL STRIP FOR VALVES
③ PHONE INTERFACE BOX
④ ⅝" Ø x 8' GROUND ROD WITH #8 BONDING WIRE & CLAMP
⑤ ¾" PVC CONDUIT FOR 120 VAC FROM METERED POWER SUPPLY
⑥ 1" PVC CONDUIT FOR EV-CAB-COM
⑦ ¾" PVC CONDUIT FOR CONTROL WIRES, SIZE AS REQUIRED
⑧ 1" PVC CONDUIT FOR FLOW & MOISTURE SENSING CABLE(S)
⑨ 2" PVC CONDUIT INSTALLED FOR PHONE WITH PULL ROPE

NOTES:

1. ALL CABLES AND ELECTRICAL WIRES MUST BE RUN IN CONDUIT.

2. PG & E WILL PROVIDE AND INSTALL THE ELECTRIC METER. CONTRACTOR SHALL COORDINATE WITH PG & E.

3. NO SUBSTITUTION IS ALLOWED ON THE ENTIRE ASSEMBLY UNLESS AN EQUALLY COMPARABLE ENCLOSURE ASSMBLY HAS BEEN SUBMITTED TO AND APPROVED BY THE PARKS AND RECREATION DEPARTMENT.

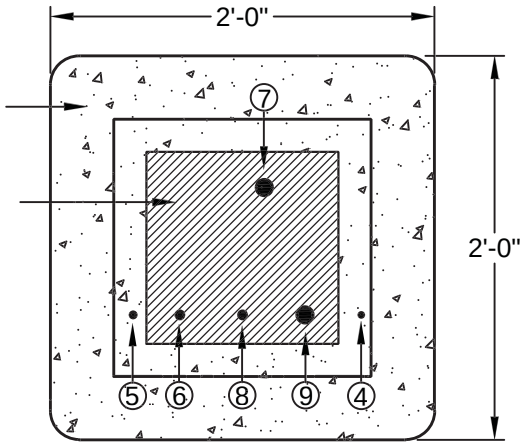

(Not To Scale)

PUBLIC WORKS DEPARTMENT

THE CITY OF BRENTWOOD

RAINMASTER DX2 IRRIGATION CONTROLLER

BALWINDER S. GREWAL CITY ENGINEER

DATE:	JUNE 20, 2003	SHEET No.
REVISED:	DEC. 31, 2013	I-6a

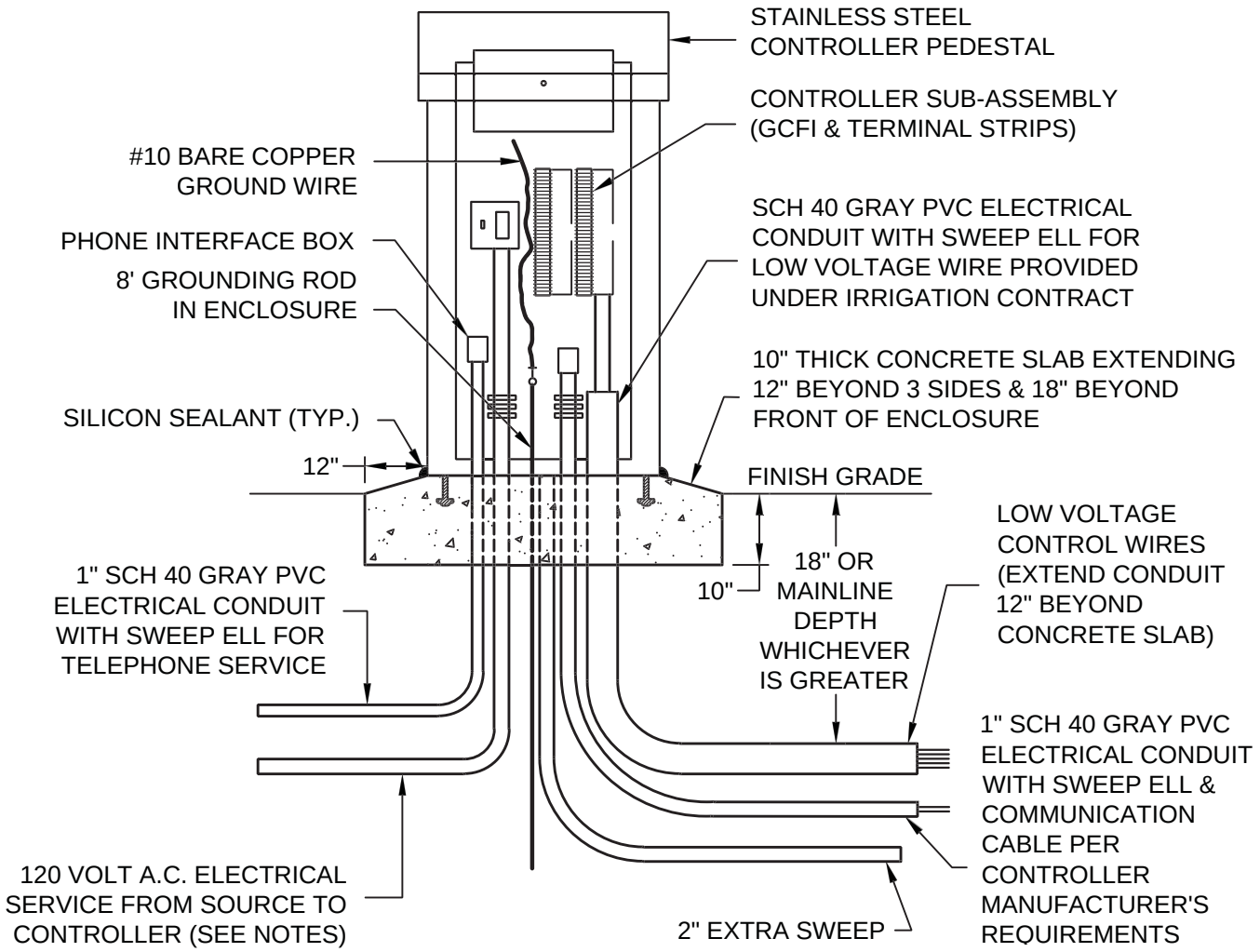

NOTES:

1. ELECTRICAL SERVICE FROM SOURCE TO CONTROLLER LOCATION SHALL BE PROVIDED BY THE ELECTRICAL CONTRACTOR.

2. IRRIGATION CONTRACTOR SHALL PROVIDE RIGID STEEL CONDUIT FROM SERVICE STUB-OUT TO CONTROLLER GCFI SWITCH AND SHALL COMPLETE ELECTRICAL SERVICE TO CONTROLLER.

3. ENCLOSURE'S FIELD LOCATION AND ORIENTATION SHALL BE APPROVED BY THE CITY ENGINEER OR DESIGNEE.

(Not To Scale)

REGISTERED PROFESSIONAL ENGINEER
BALWINDER S. GREWAL
C 49122
EXP. 9/30/14
STATE OF CALIFORNIA

PUBLIC WORKS DEPARTMENT

THE CITY OF BRENTWOOD

RAINMASTER DX2 IRRIGATION CONTROLLER ENCLOSURE TOP OPENING

BALWINDER S. GREWAL CITY ENGINEER

DATE:	JULY 25, 2007	SHEET No.
REVISED:	DEC. 31, 2013	I-6b

This page left intentionally blank

THE CITY OF BRENTWOOD

HERITAGE ▪ VISION ▪ OPPORTUNITY

(Not To Scale)

REGISTERED PROFESSIONAL ENGINEER
BALWINDER S. GREWAL
C 49122
EXP. 9/30/14
STATE OF CALIFORNIA

PUBLIC WORKS DEPARTMENT

THE CITY OF BRENTWOOD

BALWINDER S. GREWAL CITY ENGINEER

DATE:

REVISED:

SHEET No.

I-7

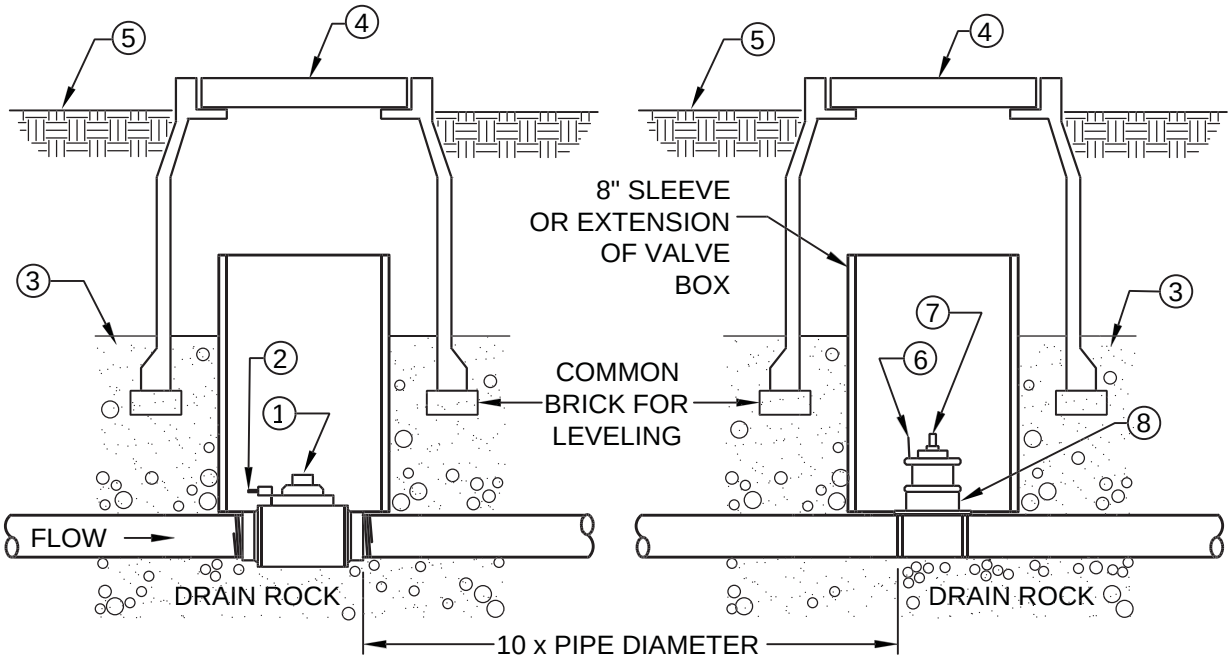

LEGEND

1. MASTER VALVE(S) (NORMALLY CLOSED)
2. WIRE TO CONTROLLER ASSEMBLY (PE-89 SHIELDED CABLE)
3. 1/4" PEA GRAVEL
4. VALVE BOX (RECTANGULAR 1419-12 BOX ONLY OR APPROVED EQUAL)
5. FINISH GRADE (SOIL)
6. DATA INDUSTRIAL IR220 SERIES FLOW SENSOR(S)
7. WIRE TO FLOW SENSING EQUIPMENT AT CONTROLLER ASSEMBLY
8. DOUBLE-STRAP SADDLE - 4" AND LARGER

NOTE: SEE I-10 FOR FLOW SENSOR DETAIL.

(Not To Scale)

REGISTERED PROFESSIONAL ENGINEER
BALWINDER S. GREWAL
C 49122
EXP. 9/30/14
STATE OF CALIFORNIA

PUBLIC WORKS DEPARTMENT

THE CITY OF BRENTWOOD

MASTER VALVE AND FLOW SENSOR

BALWINDER S. GREWAL CITY ENGINEER

DATE:	JULY 12, 2007	SHEET No.
REVISED:	DEC. 31, 2013	I-8

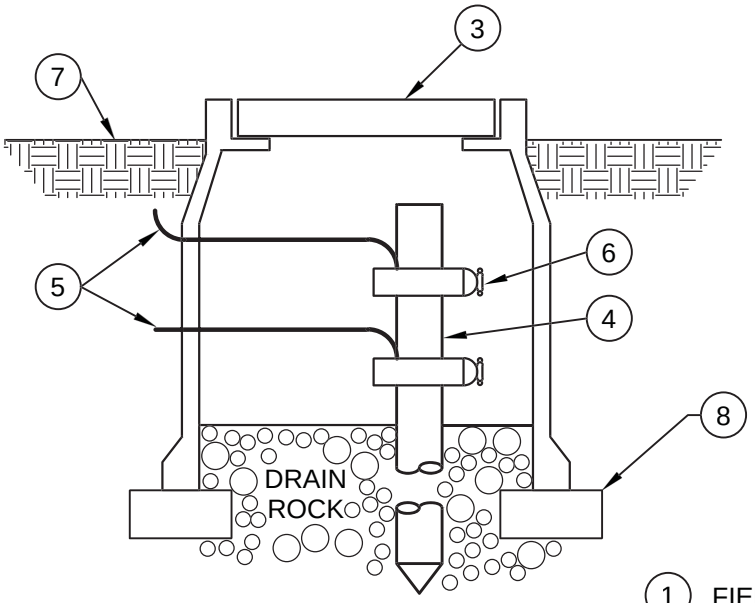

GROUND ROD ASSEMBLY

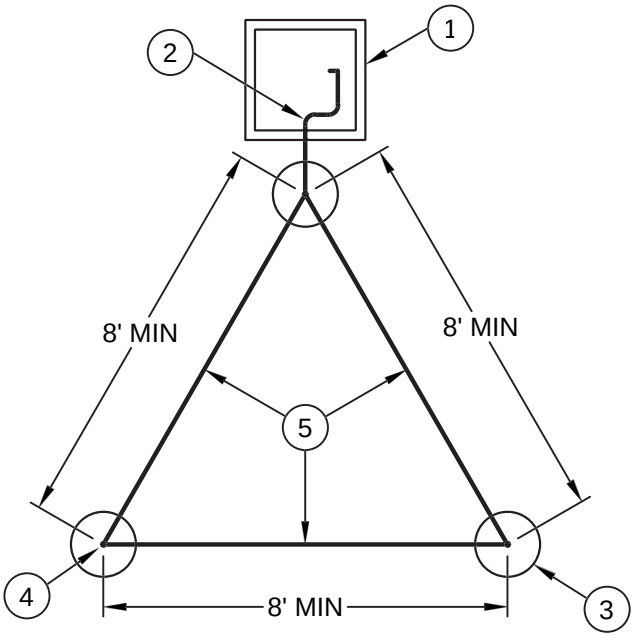

GROUND ROD LAYOUT

LEGEND

1. FIELD SATELLITE OR CCU ASSEMBLY
2. SOLID BARE COPPER WIRE (#10 AWG) FROM GROUNDING ROD TO SATELLITE OR CCU (MAKE WIRE AS SHORT AND STRAIGHT AS POSSIBLE)
3. COVER GROUNDING ROD WITH #10 ROUND VALVE BOX
4. 5/8" x 8' COPPER CLAD GROUNDING ROD; INSTALL RODS IN SOIL IN A TRIANGULAR PATTERN SPACED A MINIMUM OF 8' APART FROM EACH OTHER. GROUNDING GRID TO HAVE A RESISTANCE OF TEN (10) OHMS OR LESS
5. BARE COPPER WIRE (#10 AWG) BETWEEN GROUNDING RODS
6. GROUND ROD CLAMPS
7. FINISH GRADE
8. COMMON BRICK FOR LEVELING

(Not To Scale)

REGISTERED PROFESSIONAL ENGINEER
BALWINDER S. GREWAL
C 49122
EXP. 9/30/14
STATE OF CALIFORNIA

PUBLIC WORKS DEPARTMENT

THE CITY OF BRENTWOOD

CCU OR FIELD SATELLITE GROUNDING GRID

BALWINDER S. GREWAL CITY ENGINEER

DATE:	JUNE 16, 2003	SHEET No.
REVISED:	DEC. 31, 2013	I-9

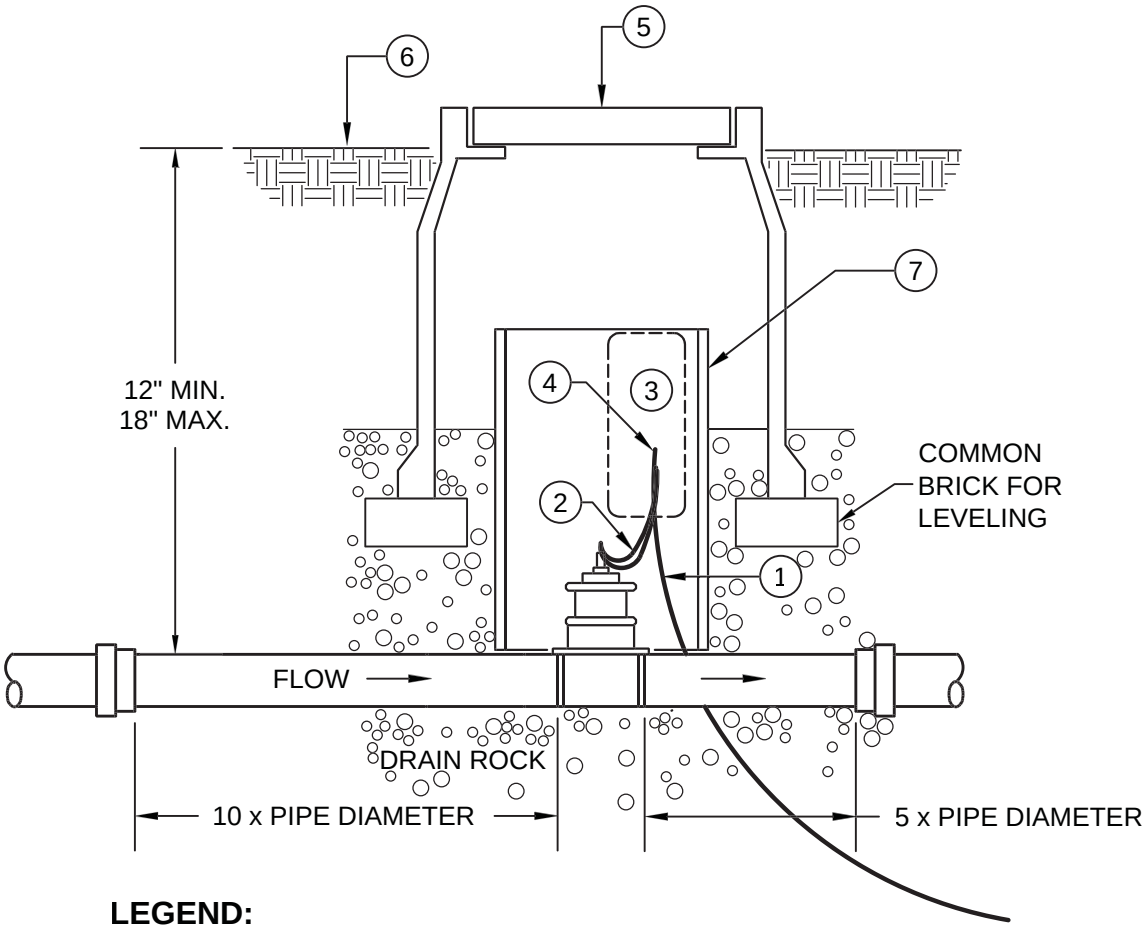

LEGEND:

1. SHIELDED CABLE AS PER MANUFACTURER'S RECOMMENDATION
2. FLOW SENSOR WIRES
3. PREFORMED SUPER SERVISEAL WATERPROOF WIRE SPLICE KIT
4. 3M-BDY WIRE CONNECTION (SEE I-12)
5. VALVE BOX (RECTANGULAR 1419-12 BOX ONLY OR APPROVED EQUAL)
6. FINISH GRADE (SOIL)
7. 6" Ø SLEEVE

(Not To Scale)

REGISTERED PROFESSIONAL ENGINEER
BALWINDER S. GREWAL
C 49122
EXP. 9/30/14
STATE OF CALIFORNIA

PUBLIC WORKS DEPARTMENT

THE CITY OF BRENTWOOD

FLOW SENSOR WIRE SPLICE

BALWINDER S. GREWAL CITY ENGINEER

DATE:	JULY 12, 2007	SHEET No.
REVISED:	DEC. 31, 2013	I-10

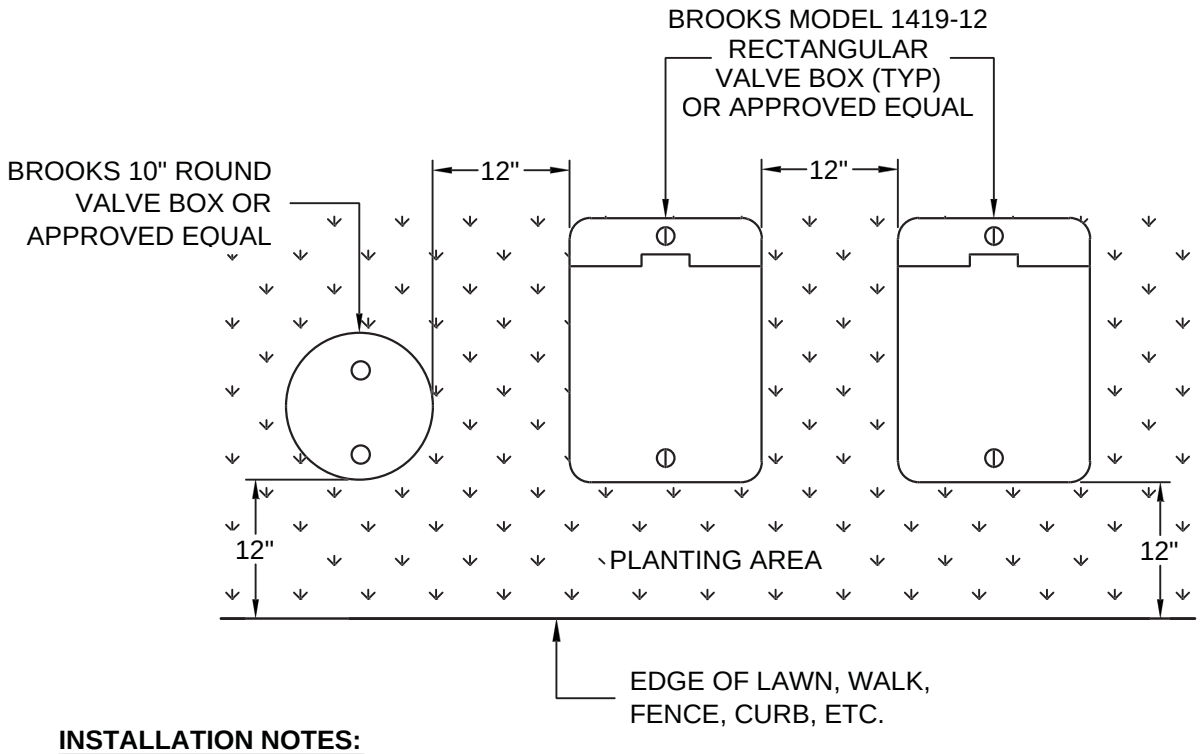

INSTALLATION NOTES:

1. CENTER BOXES OVER VALVES.
2. SET BOXES IN GROUND COVER/SHRUB ARE WHERE POSSIBLE.
3. SET BOXES PARALLEL TO EACH OTHER AND PERPENDICULAR TO EDGE.
4. AVOID HEAVILY COMPACTING SOIL AROUND BOXES TO PREVENT DAMAGING VALVE BOXES.
5. TAG VALVES WITH STATION NUMBERS.
6. HEAT BRAND STATION NUMBER TO LID CONTROL VALVE COVER WITH 1¼" LETTERS.
7. INSTALL STAINLESS STEEL BOLTS IN LOCKING COVER.
8. WHEN USED AS RECLAIMED WATER, LIDS SHALL BE COLOR-CODED PURPLE.
9. FOR ALL VALVES 1 ½" AND LARGER, JUMBO BOX SHALL BE USED.

(Not To Scale)

REGISTERED PROFESSIONAL ENGINEER
BALWINDER S. GREWAL
C 49122
EXP. 9/30/14
STATE OF CALIFORNIA

PUBLIC WORKS DEPARTMENT

THE CITY OF BRENTWOOD

IRRIGATION VALVE BOX INSTALLATION

BALWINDER S. GREWAL CITY ENGINEER

DATE:	APR. 29, 2005	SHEET No.
REVISED:	DEC. 31, 2013	I-11

STEP 1: STRIP WIRES 1/2" FROM ENDS.

STEP 2: APPLY SCOTCHLOK OR APPROVED EQUAL Y SPRING CONNECTOR IN A CLOCKWISE DIRECTION (FOR CLOCKS ONLY).

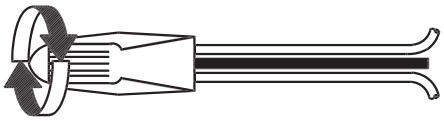

STEP 3: INSERT SPLICE TO BOTTOM OF GEL-FILLED TUBE. CHECK TO MAKE SURE CONNECTOR HAS BEEN PUSHED PAST LOCKING FINGERS AND IS SEATED AT BOTTOM OF TUBE.

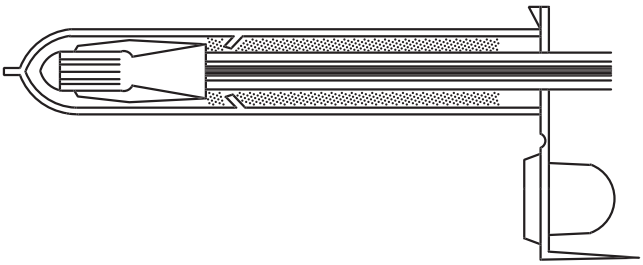

STEP 4: POSITION WIRES IN WIRE CHANNELS AND CLOSE INSULATOR TUBE COVER.

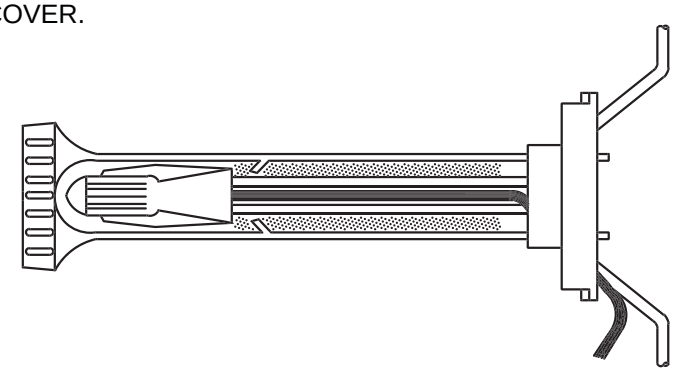

NOTE: MAXIMUM WIRE SIZES PER CONNECTOR ARE 3 - #4'S OR 2 - #12'S.

(Not To Scale)

REGISTERED PROFESSIONAL ENGINEER
BALWINDER S. GREWAL
C 49122
EXP. 9/30/14
STATE OF CALIFORNIA

PUBLIC WORKS DEPARTMENT

THE CITY OF BRENTWOOD

3M-DBY WIRE CONNECTION

BALWINDER S. GREWAL CITY ENGINEER

DATE:	JUN. 18, 1999	SHEET No.
REVISED:	DEC. 31, 2013	I-12

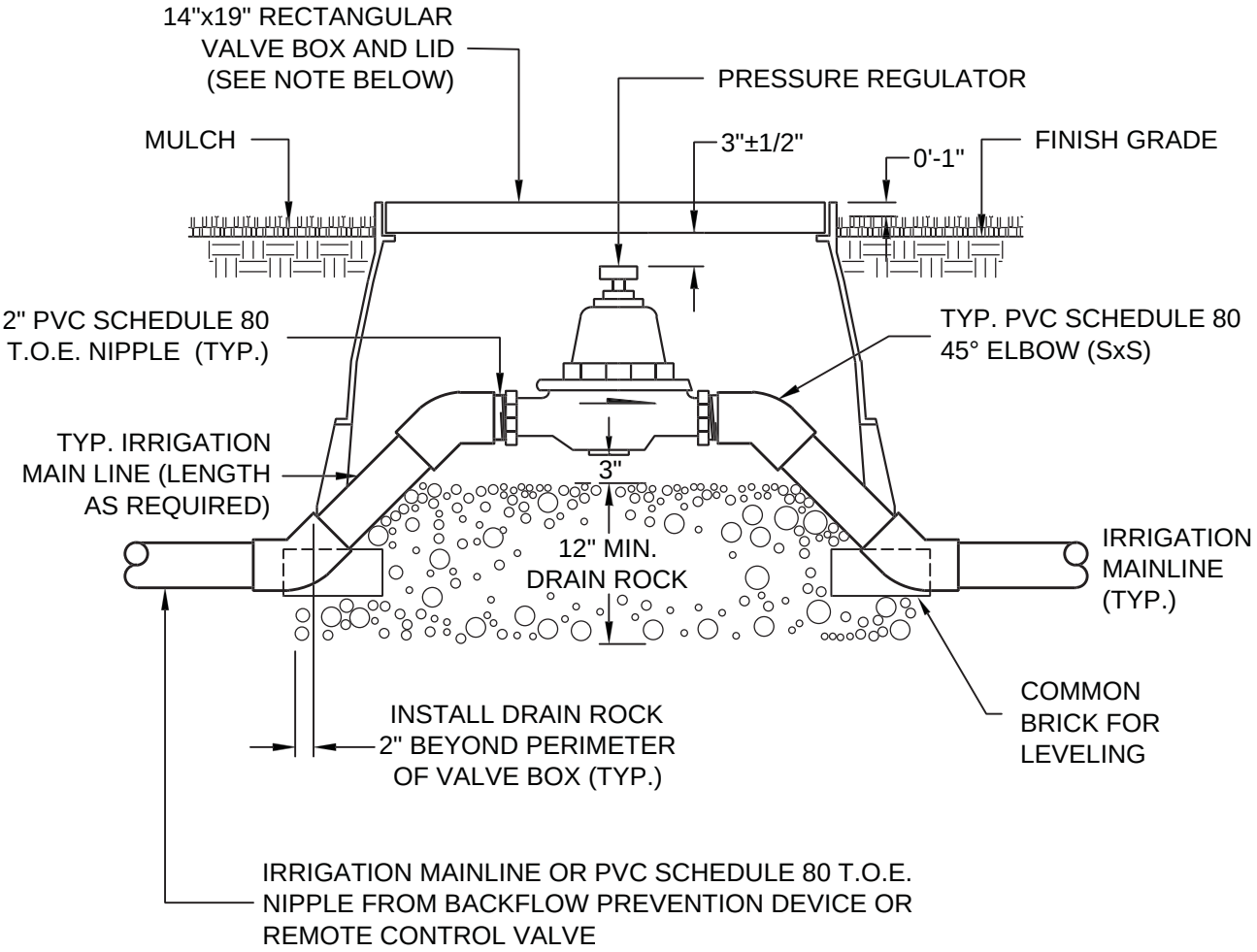

NOTE:

SET TOP OF BOX FLUSH WITH FINISH GRADE IN TURF AREAS.

(Not To Scale)

REGISTERED PROFESSIONAL ENGINEER
BALWINDER S. GREWAL
C 49122
EXP. 9/30/14
STATE OF CALIFORNIA

PUBLIC WORKS DEPARTMENT

THE CITY OF BRENTWOOD

PRESSURE REGULATOR

BALWINDER S. GREWAL CITY ENGINEER

DATE:	JULY 12, 2007	SHEET No.
REVISED:	DEC. 31, 2013	I-13

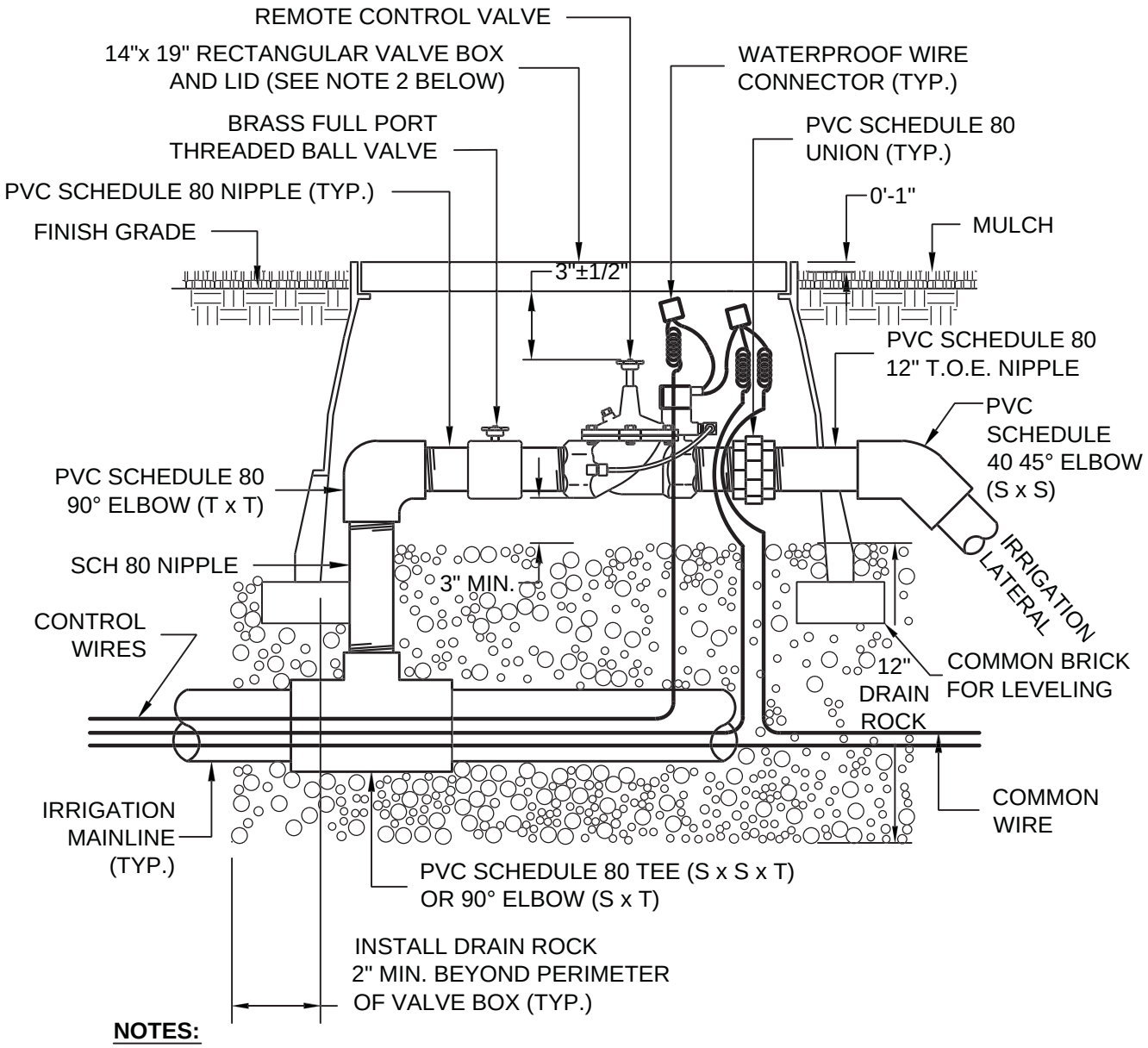

NOTES:

1. SET TOP OF BOX FLUSH WITH FINISH GRADE IN TURF AREAS.
2. VALVE NUMBERS SHALL BE HEAT BRANDED ON THE VALVE BOX LID AND TAGGED ON ALL VALVES.
3. WHEN USED WITH RECLAIMED WATER, DESIGNATE PURPLE COLOR-CODING ON APPROPRIATE APPURTENANCE.

(Not To Scale)

REGISTERED PROFESSIONAL ENGINEER
BALWINDER S. GREWAL
C 49122
EXP. 9/30/14
STATE OF CALIFORNIA

PUBLIC WORKS DEPARTMENT

THE CITY OF BRENTWOOD

REMOTE CONTROL VALVE

BALWINDER S. GREWAL CITY ENGINEER

DATE:	JULY 12, 2007	SHEET No.
REVISED:	DEC. 31, 2013	I-14

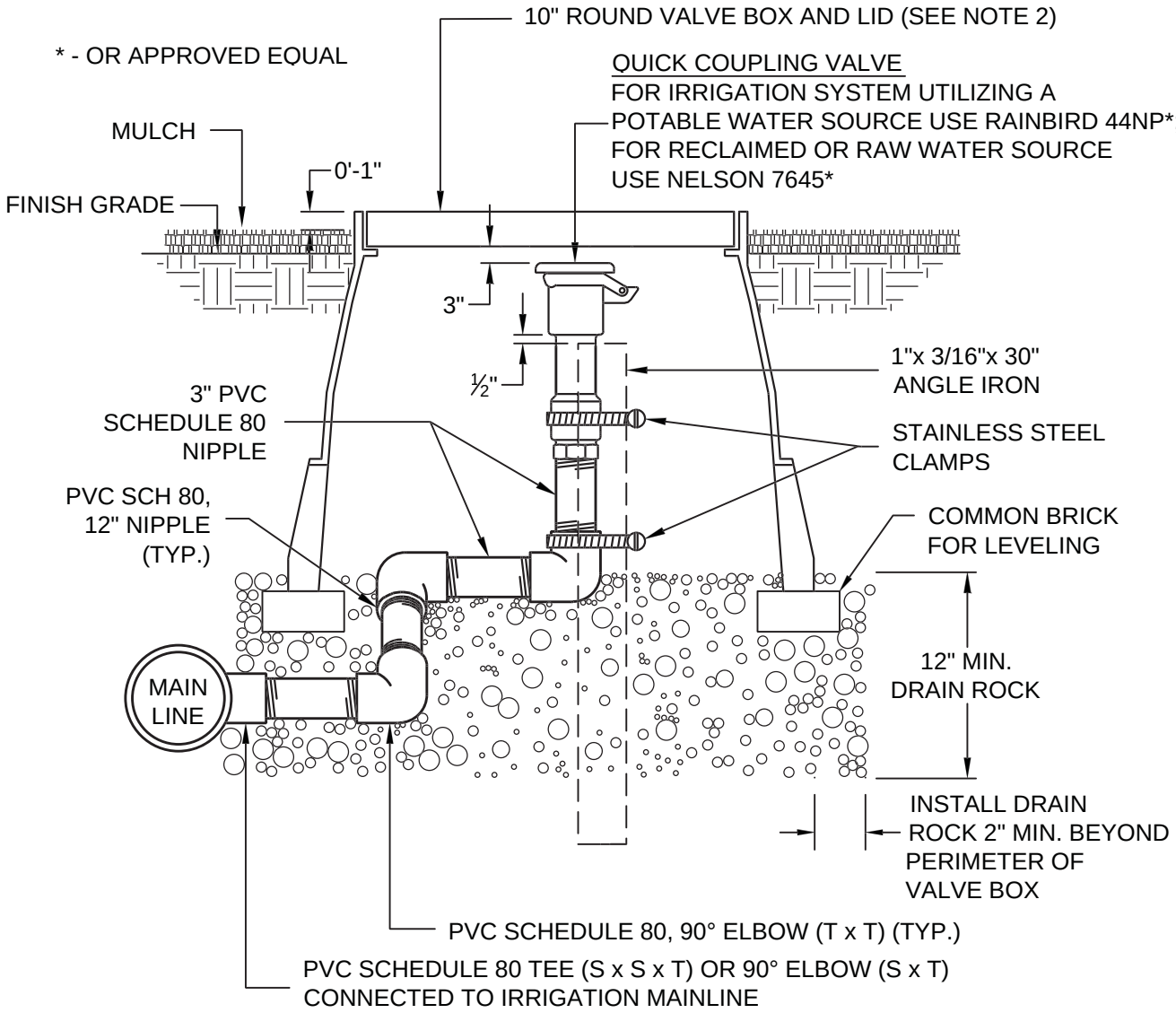

NOTES:

1. SET TOP OF BOX EVEN WITH FINISH GRADES IN TURF AREAS.
2. VALVE BOX LIDS SHALL BE TAGGED AND HEAT BRANDED WITH STATION NUMBERS.
3. INSTALL STAINLESS STEEL BOLT IN LOCKING COVER.
4. WHEN USED WITH RECLAIMED WATER, DESIGNATE PURPLE COLOR-CODING ON APPROPRIATE APPURTENANCE.

(Not To Scale)

REGISTERED PROFESSIONAL ENGINEER
BALWINDER S. GREWAL
C 49122
EXP. 9/30/14
STATE OF CALIFORNIA

PUBLIC WORKS DEPARTMENT

THE CITY OF BRENTWOOD

QUICK COUPLING VALVE

BALWINDER S. GREWAL CITY ENGINEER

DATE:	JULY 11, 2007	SHEET No.
REVISED:	DEC. 31, 2013	I-15

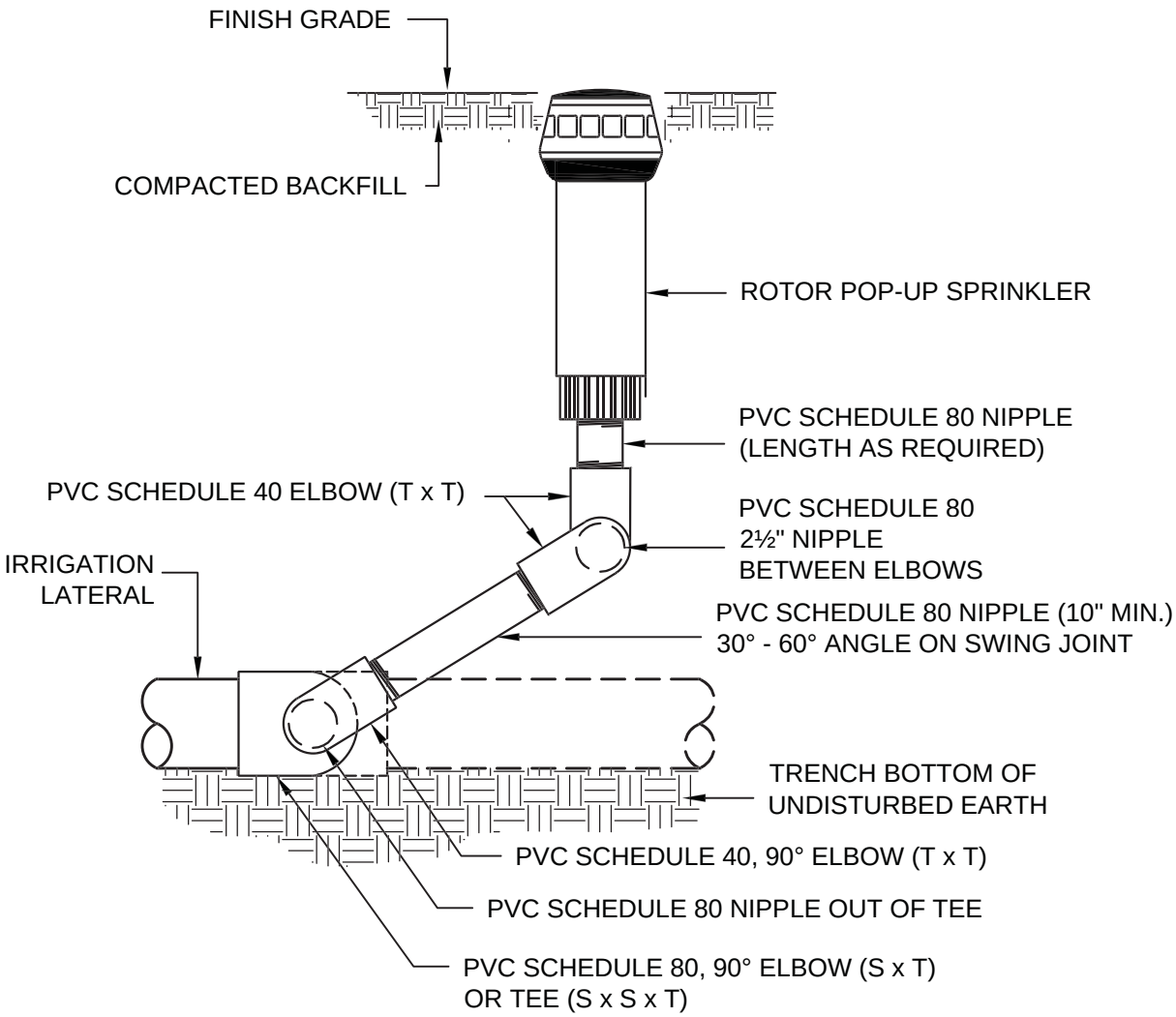

NOTE:

SPRINKLER BODY SHALL BE COLOR-CODED PURPLE.

(Not To Scale)

REGISTERED PROFESSIONAL ENGINEER
BALWINDER S. GREWAL
C 49122
EXP. 9/30/14
STATE OF CALIFORNIA

PUBLIC WORKS DEPARTMENT

THE CITY OF BRENTWOOD

ROTARY POP-UP HEAD

BALWINDER S. GREWAL CITY ENGINEER

DATE:	JUNE 20, 2003	SHEET No.
REVISED:	DEC. 31, 2013	I-16

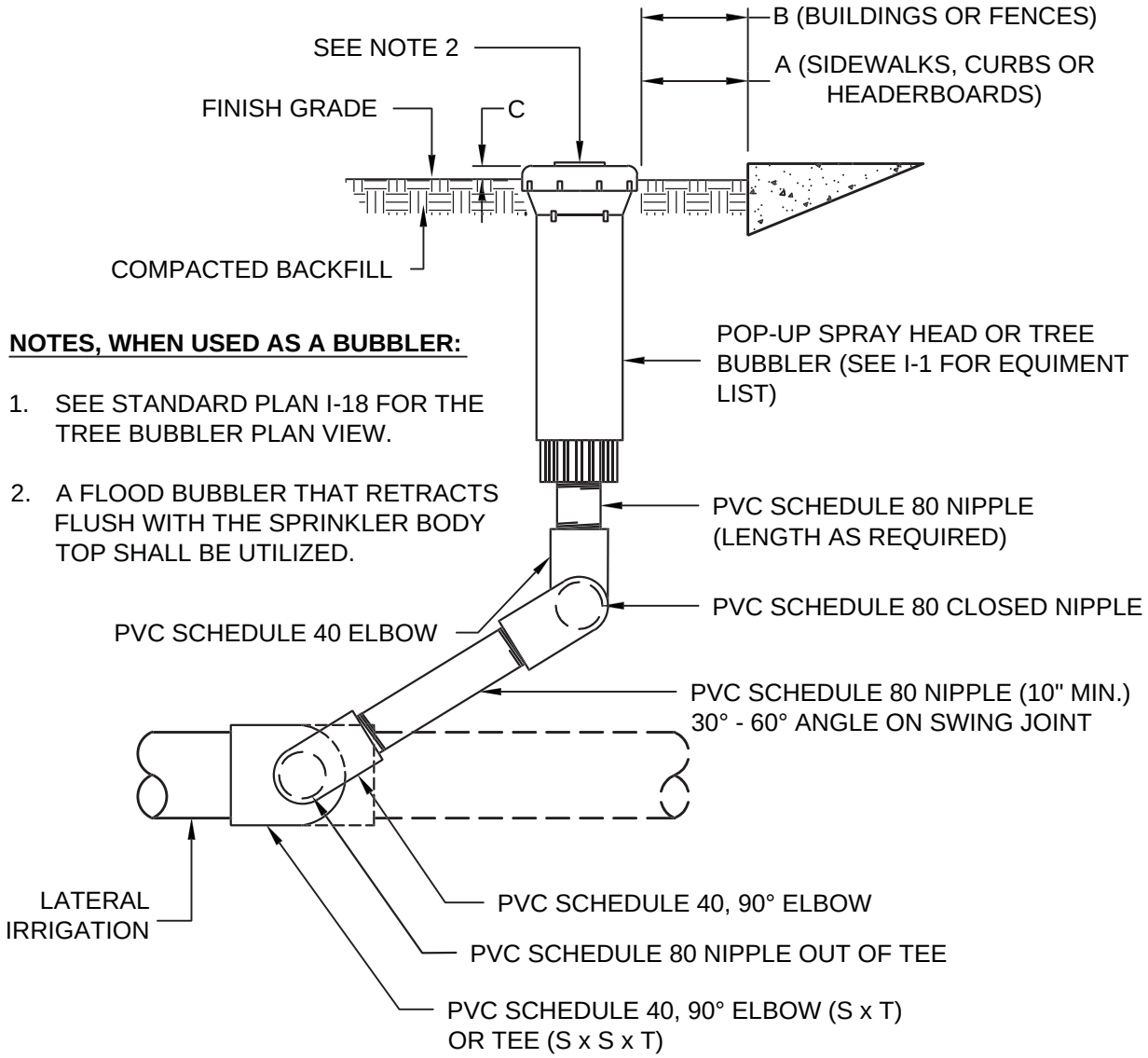

NOTES, WHEN USED AS A BUBBLER:

1. SEE STANDARD PLAN I-18 FOR THE TREE BUBBLER PLAN VIEW.
2. A FLOOD BUBBLER THAT RETRACTS FLUSH WITH THE SPRINKLER BODY TOP SHALL BE UTILIZED.

POP-UP HEAD	DISTANCE		
	A	B	C
4"	2"±1/2"	N.A.	FLUSH WITH GRADE
6" & 12"	6"±1/2"	12"±1"	1/2" IN GROUND COVER AREAS

(Not To Scale)

REGISTERED PROFESSIONAL ENGINEER
BALWINDER S. GREWAL
C 49122
EXP. 9/30/14
STATE OF CALIFORNIA

PUBLIC WORKS DEPARTMENT

THE CITY OF BRENTWOOD

TREE BUBBLER AND SPRAY POP-UP HEAD

BALWINDER S. GREWAL CITY ENGINEER

DATE: JUNE 16, 2003
REVISED: DEC. 31, 2013

SHEET No.
I-17

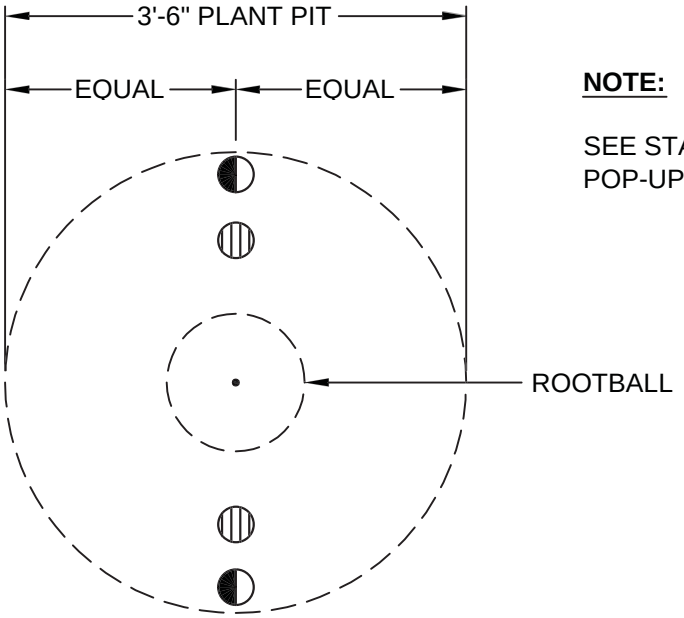

ON FLAT GRADE (TYP.)

NOTE:

SEE STANDARD PLAN I-17 FOR THE POP-UP TREE BUBBLER.

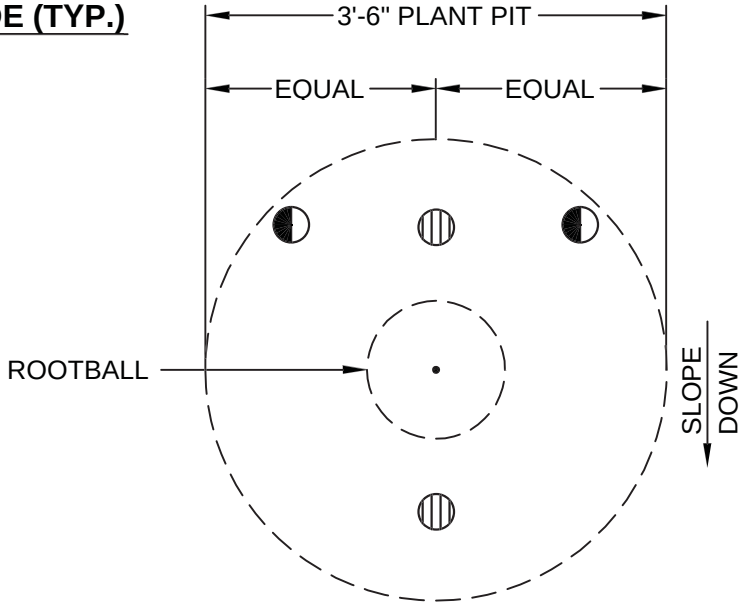

ON SLOPES

LEGEND:

- • TREE TRUNK
- 2- 4" PERFORATED DRAIN PIPES AND GRATES SECURED WITH 2 SELF-TAPPING SCREWS
- 2- 4" POP-UP IRRIGATION HEAD LOCATION

(Not To Scale)

REGISTERED PROFESSIONAL ENGINEER
BALWINDER S. GREWAL
C 49122
EXP. 9/30/14
STATE OF CALIFORNIA

PUBLIC WORKS DEPARTMENT

THE CITY OF BRENTWOOD

TREE BUBBLER-PLAN VIEW

BALWINDER S. GREWAL CITY ENGINEER

DATE:	APR. 29, 2005	SHEET No.
REVISED:	DEC. 31, 2013	I-18

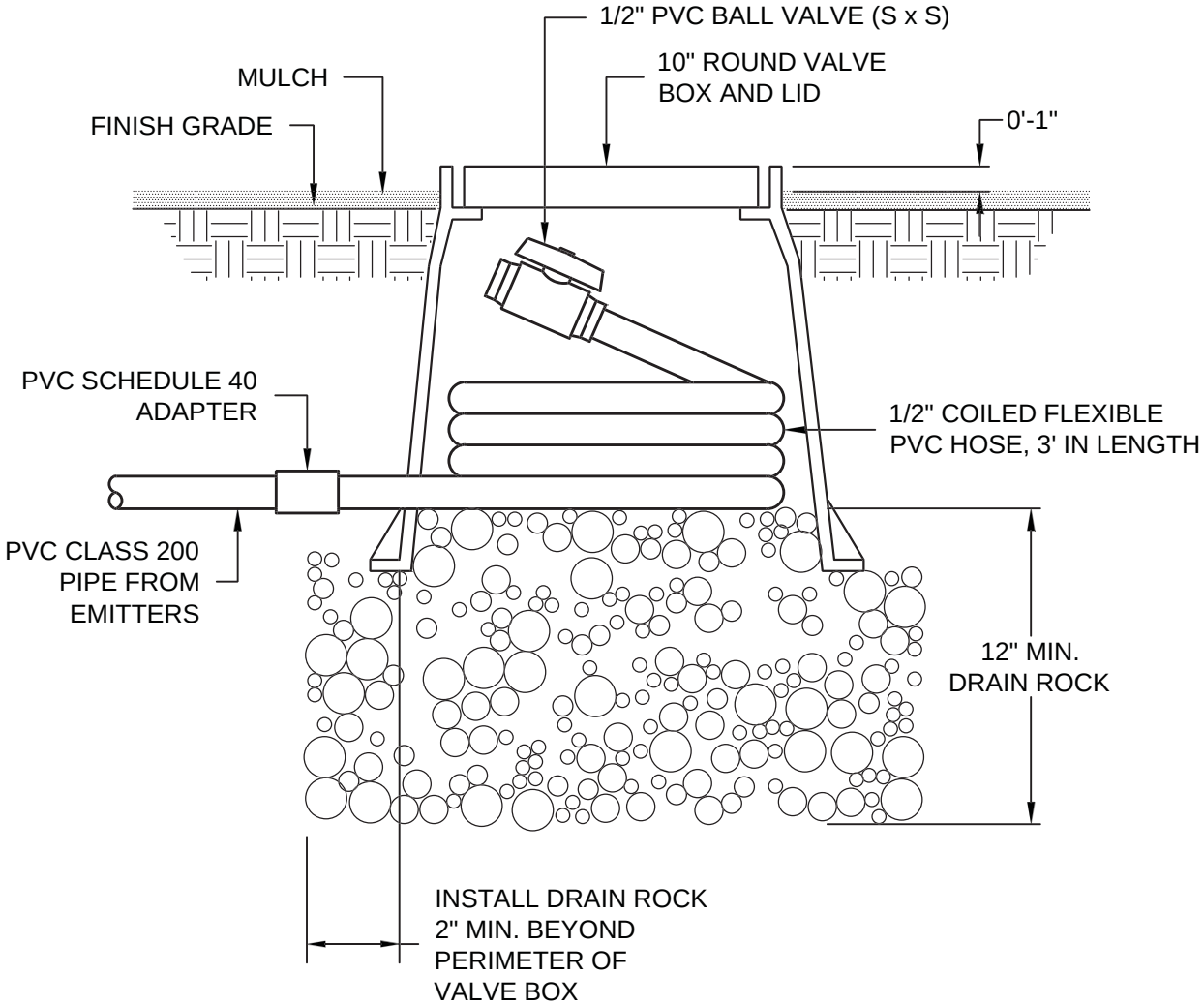

(Not To Scale)

REGISTERED PROFESSIONAL ENGINEER
BALWINDER S. GREWAL
C 49122
EXP. 9/30/14
STATE OF CALIFORNIA

PUBLIC WORKS DEPARTMENT

THE CITY OF BRENTWOOD

FLUSH VALVE

BALWINDER S. GREWAL CITY ENGINEER

DATE:	MAY 28, 1999
REVISED:	DEC. 31, 2013

SHEET No.
I-19

This page left intentionally blank

THE CITY OF BRENTWOOD

(Not To Scale)

REGISTERED PROFESSIONAL ENGINEER
BALWINDER S. GREWAL
C 49122
EXP. 9/30/14
STATE OF CALIFORNIA

PUBLIC WORKS DEPARTMENT

THE CITY OF BRENTWOOD

BALWINDER S. GREWAL CITY ENGINEER

DATE:

REVISED:

SHEET No.
I-20

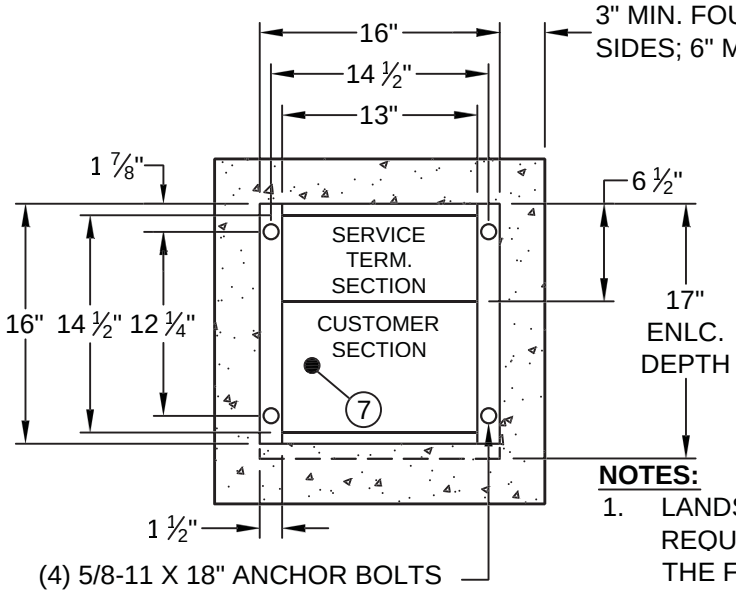

MOUNTING BASE

LEGEND:

① MEANS PROVIDED TO HOLD DOOR IN OPEN POSITION
② DEMAND METER RESET COVER WITH WINDOW
③ PADLOCK BKT. EXTENDING THRU DOOR FOR SECURITY
④ LIFT OFF SERVICE COVER
⑤ HINGED DEADFRONT
⑥ FULLY HINGED METER/TEST SECTION COVER
⑦ GROUND ROD

NOTES:

1. LANDSCAPE SCREENING SHALL BE REQUIRED WITH 36" MIN. CLEARANCE ON THE FRONT AND BACK OF THE ENCLOSURE.
2. SERVICE CABINET SHALL BE TYPE MILBANK WEST CP3B11115A STAINLESS STEEL FOR 100-AMPERE AND LESS OR APPROVED EQUAL.

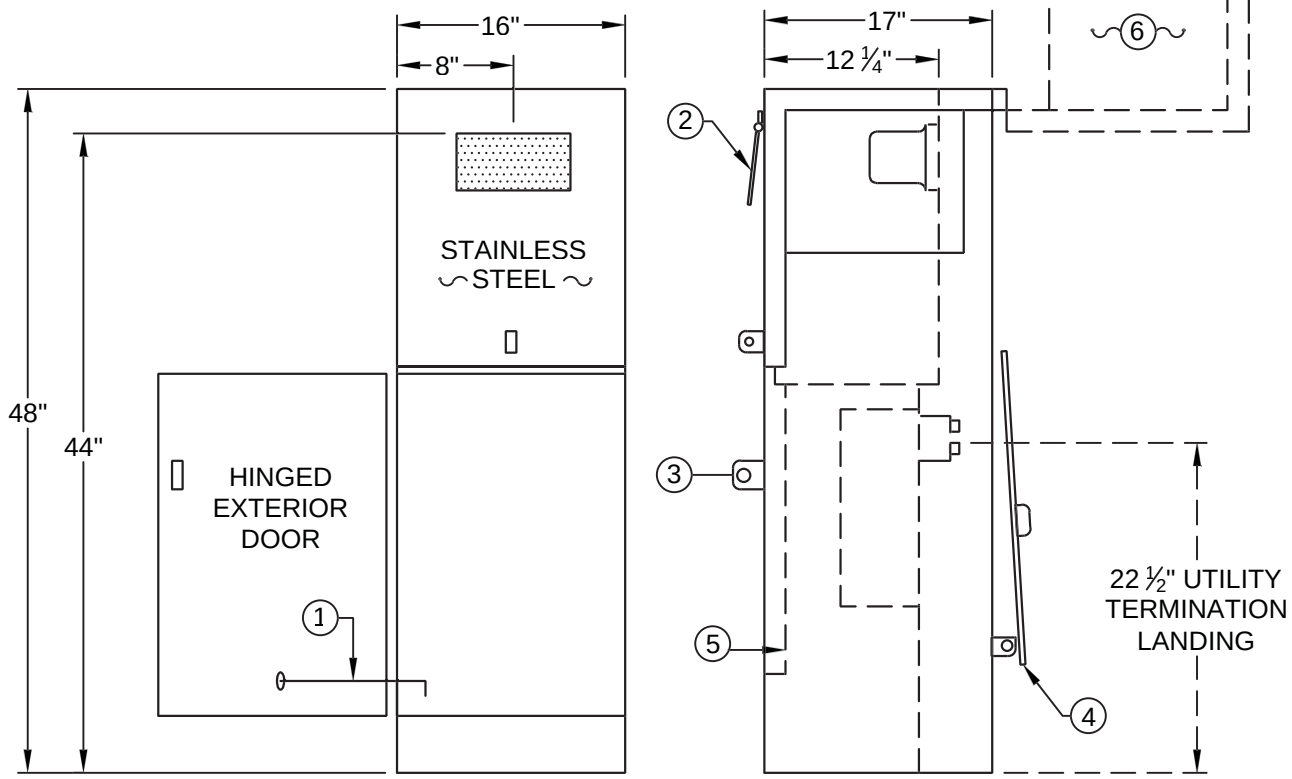

(Not To Scale)

REGISTERED PROFESSIONAL ENGINEER
BALWINDER S. GREWAL
C 49122
EXP. 9/30/14
STATE OF CALIFORNIA

PUBLIC WORKS DEPARTMENT

THE CITY OF BRENTWOOD

ELECTRIC METER PEDESTAL

BALWINDER S. GREWAL CITY ENGINEER

DATE:	JUNE 20, 2003
REVISED:	DEC. 31, 2013

SHEET No. **I-21**

This page left intentionally blank

THE CITY OF BRENTWOOD

HERITAGE ▪ VISION ▪ OPPORTUNITY

(Not To Scale)

REGISTERED PROFESSIONAL ENGINEER
BALWINDER S. GREWAL
C 49122
EXP. 9/30/14
STATE OF CALIFORNIA

PUBLIC WORKS DEPARTMENT

THE CITY OF BRENTWOOD

BALWINDER S. GREWAL CITY ENGINEER

DATE:

REVISED:

SHEET No.

I-22

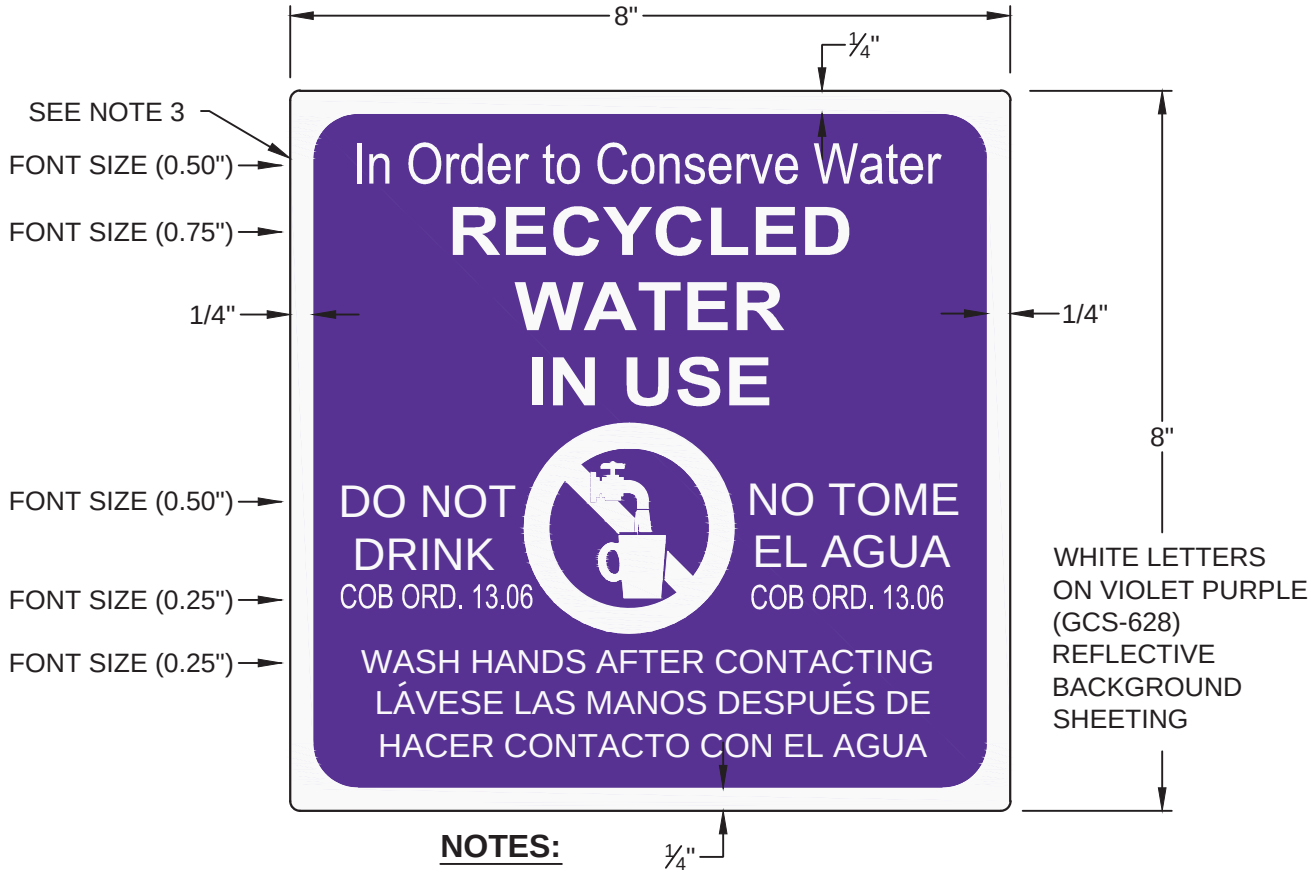

NOTES:

1. ALL SIGNS MUST BE STAMPED "PROPERTY OF THE CITY OF BRENTWOOD", AND DATED.
2. LETTER STYLE, CITY LOGO, AND BORDER COLOR ARE REFLECTIVE WHITE AGAINST PURPLE, REFLECTIVE SHEETING.
3. ¼" WHITE BORDER OFFSET ¼" FROM EDGE OF SIGN.
4. ONE SIGN REQUIRED AT EACH ENTRANCE AND AT LEAST EVERY 500 FEET WHERE NO-POTABLE WATER IS USED.
5. ALL FONTS ARE HIGHWAY GOTHIC "D". FONT SIZES ARE 0.75" (¾"), 0.50" (½") OR 0.25" (¼") UPPER AND LOWER CASE.

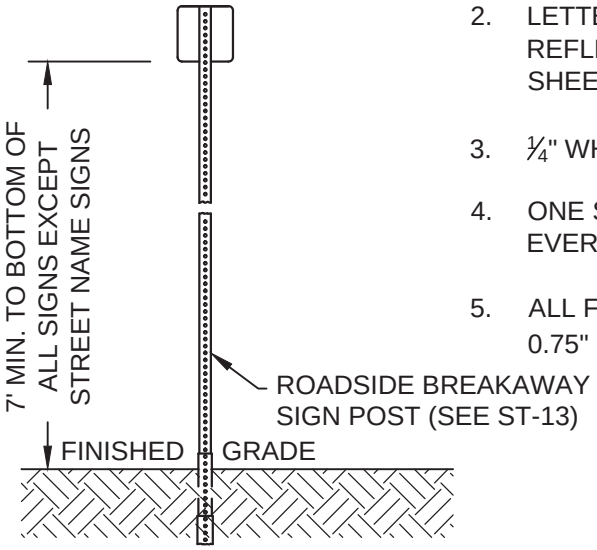

(Not To Scale)

REGISTERED PROFESSIONAL ENGINEER
BALWINDER S. GREWAL
C 49122
EXP. 9/30/14
STATE OF CALIFORNIA

PUBLIC WORKS DEPARTMENT

THE CITY OF BRENTWOOD

NON-POTABLE WATER SIGNAGE

BALWINDER S. GREWAL CITY ENGINEER

DATE:	JUNE, 2006	SHEET No.
REVISED:	DEC. 31, 2013	I-23

NOTES:

1. SEE L-3 FOR ROOT BARRIER DETAIL.
2. TREES SHALL BE PLANTED AT 10' MIN. CLEAR FROM WALLS, FENCES, TABLES, BENCHES, SIDEWALKS, MOWBANDS, ETC.
3. NO TREES SHALL BE PLANTED WITHIN 5' OF EXISTING OR DESIGNED JOINT TRENCH UTILITY, 35' FROM STREET INTERSECTION AND 20' FROM STREET LIGHT.

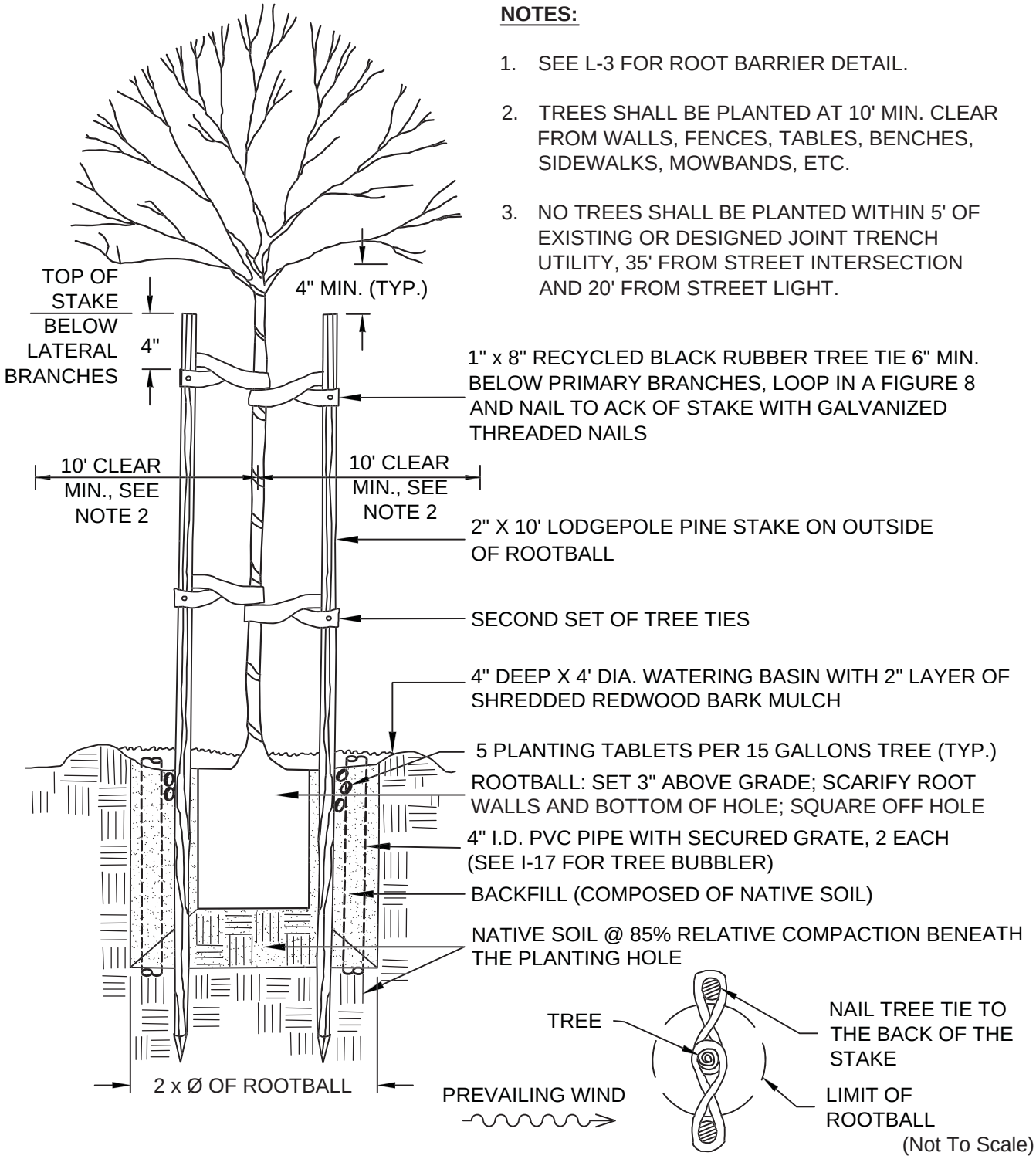

(Not To Scale)

REGISTERED PROFESSIONAL ENGINEER
BALWINDER S. GREWAL
C 49122
EXP. 9/30/14
STATE OF CALIFORNIA

PUBLIC WORKS DEPARTMENT

THE CITY OF BRENTWOOD

TREE PLANTING

BALWINDER S. GREWAL CITY ENGINEER

DATE:	APRIL 16, 2008	SHEET No.
REVISED:	DEC. 31, 2013	L-1

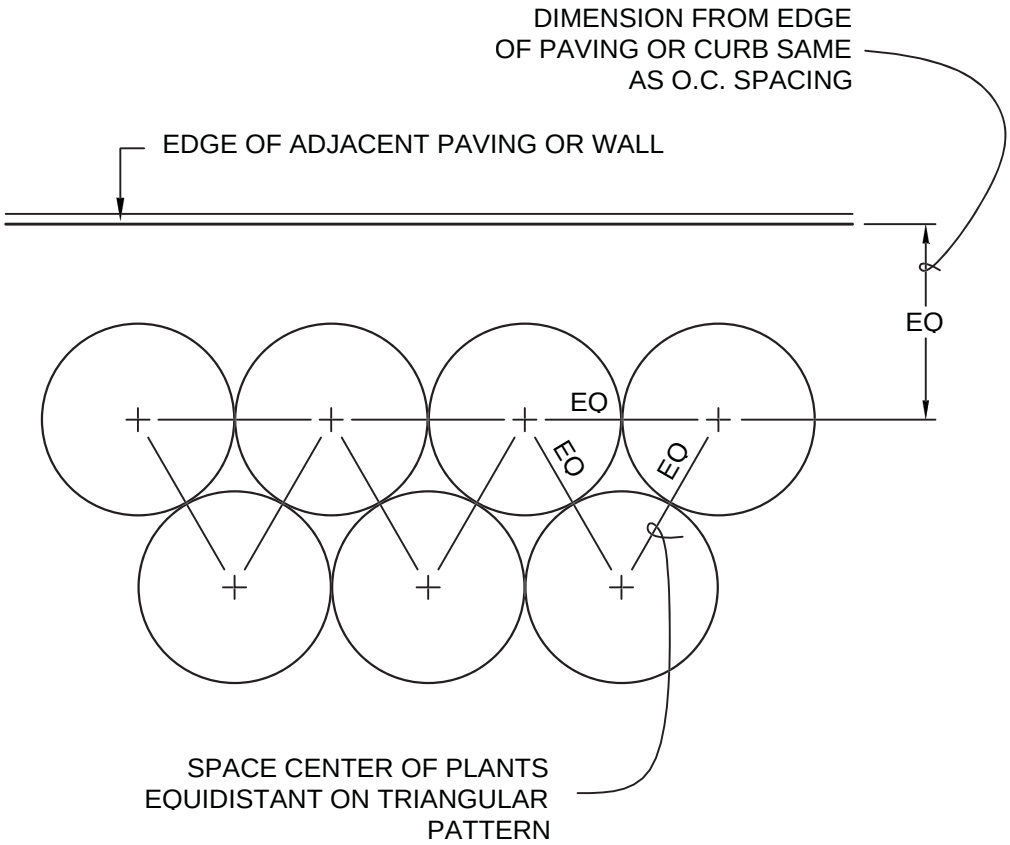

(Not To Scale)

REGISTERED PROFESSIONAL ENGINEER
BALWINDER S. GREWAL
C 49122
EXP. 9/30/14
STATE OF CALIFORNIA

PUBLIC WORKS DEPARTMENT

THE CITY OF BRENTWOOD

SHRUB/GROUND COVER SPACING

BALWINDER S. GREWAL CITY ENGINEER

DATE:	MAY 28, 1999	SHEET No.
REVISED:	DEC. 31, 2013	L-2

LEGEND:

Ⓐ - INSTALL 24" DEEP ROOT BARRIER AT EDGE OF SIDEWALK

Ⓑ - INSTALL 36" DEEP ROOT BARRIER AT BACK OF CURB

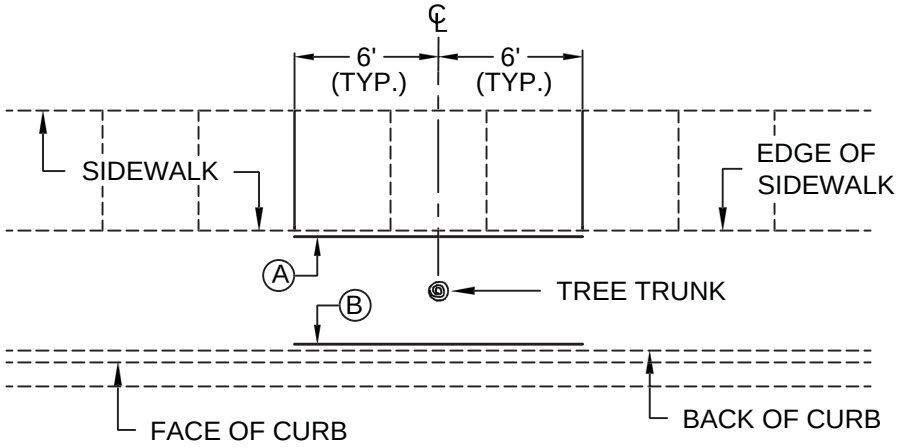

DETACHED SIDEWALK

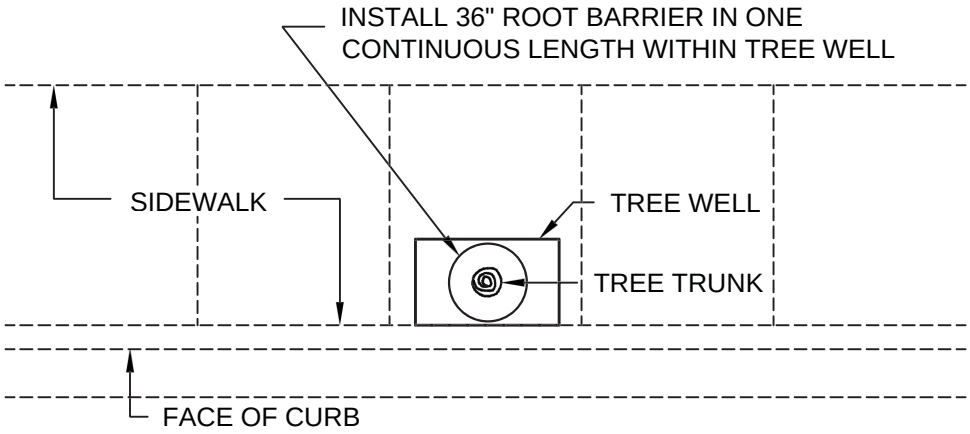

MONOLITHIC CURB AND SIDEWALK

NOTES:

1. ROOT BARRIERS SHALL BE REQUIRED FOR ALL TREES PLANTED WITHIN 5' OF HARDSCAPE.
2. 24" AND 36" ROOT BARRIER SHALL BE HIGH DENSITY AND HIGH IMPACT PLASTIC AS AVAILBLE FROM "DEEP ROOT," VESPRO, INC. OR EQUIVALENT AS APPROVED BY PARKS AND RECREATION DEPARTMENT.
3. TOP OF ROOT BARRIER SHALL BE SET ½" ± ABOVE FINISHED GRADE OF SOIL. HOWEVER, UNDER NO CIRCUMSTANCES SHALL THE TOP OF ROOT BARRIER EXTEND ABOVE ADJACENT CURB, SIDEWALK OR OTHER HARD SURFACING, AND SHALL NE INSTALLED IN ACCORDANCE WITH MANUFACTURER'S INSTRUCTIONS.
4. REFER TO THE URBAN AND FOREST GUIDELINE FOR MIN. PLANTER SIZE REQUIREMENTS AVAILABLE AT http://www.ci.brentwood.ca.us/department/parks/urban_trees/index.cfm.

(Not To Scale)

PUBLIC WORKS DEPARTMENT

THE CITY OF BRENTWOOD

ROOT BARRIER DETAIL

BALWINDER S. GREWAL CITY ENGINEER

DATE:	AUG. 29, 2005
REVISED:	DEC. 31, 2013

SHEET No. **L-3**

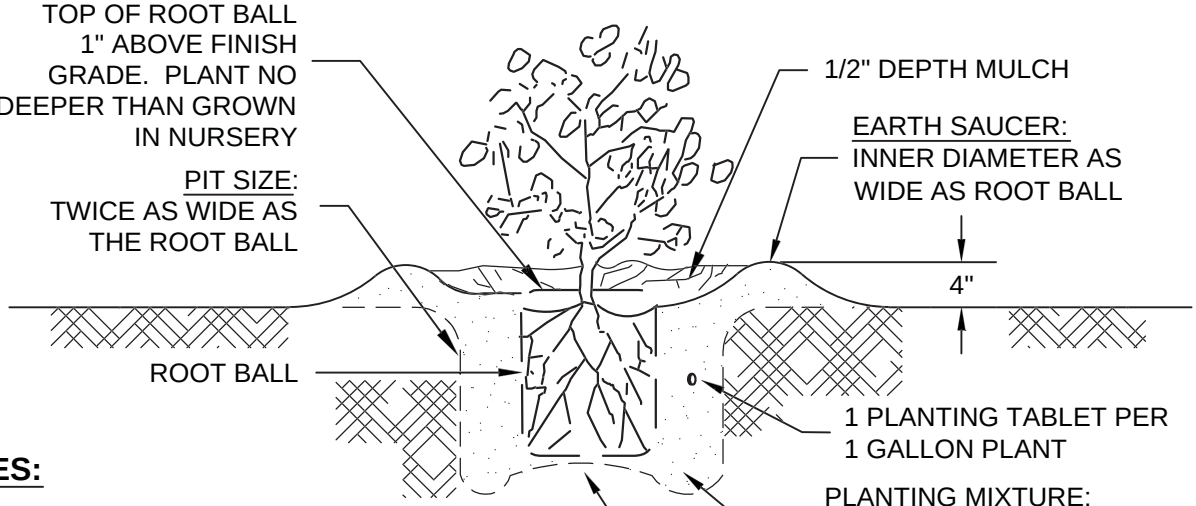

NOTES:

1. PROVIDE CITY WITH PLANTING MIXTURE SPECIFICATIONS.
2. PLANTER AREA SHALL HAVE PRE-EMERGENT HERBICIDE APPLIED BEFORE PLANTING TO PREVENT GERMINATION WEED SEEDS.

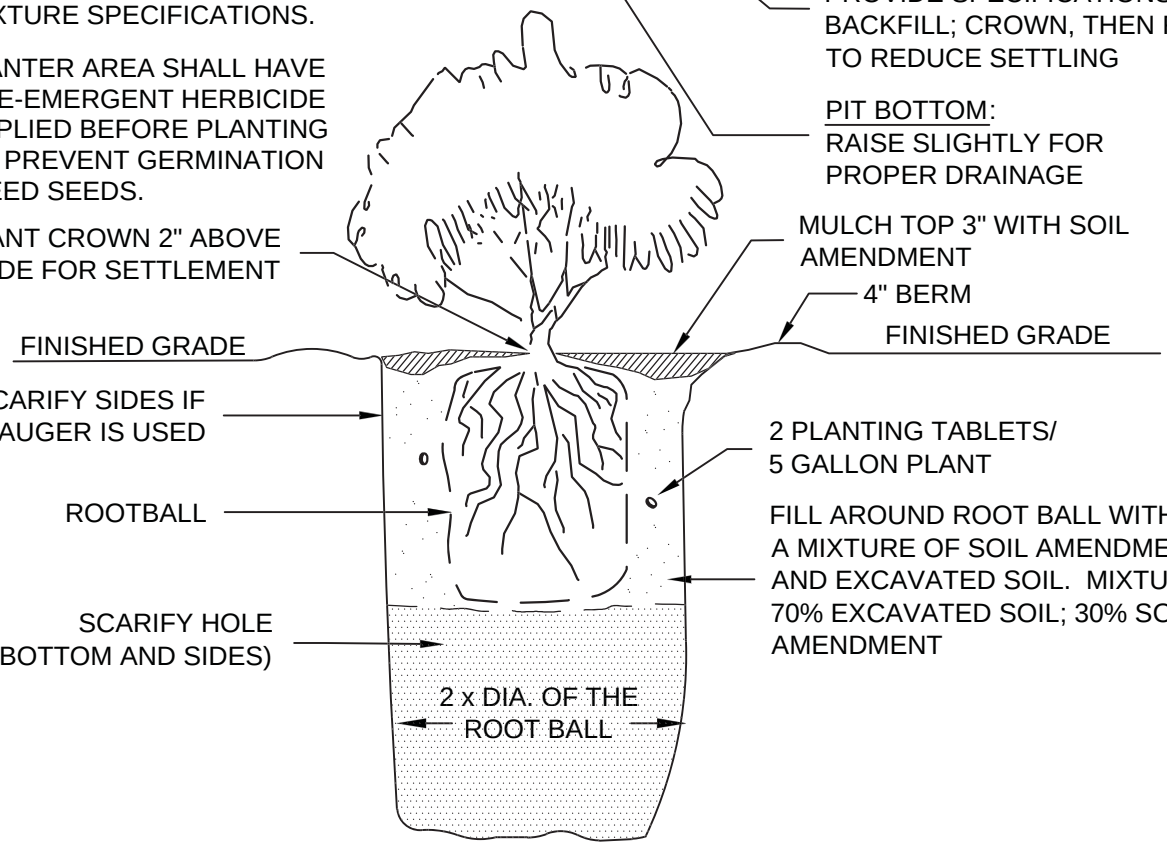

(Not To Scale)

REGISTERED PROFESSIONAL ENGINEER
BALWINDER S. GREWAL
C 49122
EXP. 9/30/14
STATE OF CALIFORNIA

PUBLIC WORKS DEPARTMENT

THE CITY OF BRENTWOOD

SHRUB PLANTING DETAILS

BALWINDER S. GREWAL CITY ENGINEER

DATE:	JULY 17, 2007	SHEET No.
REVISED:	DEC. 31, 2013	L-4

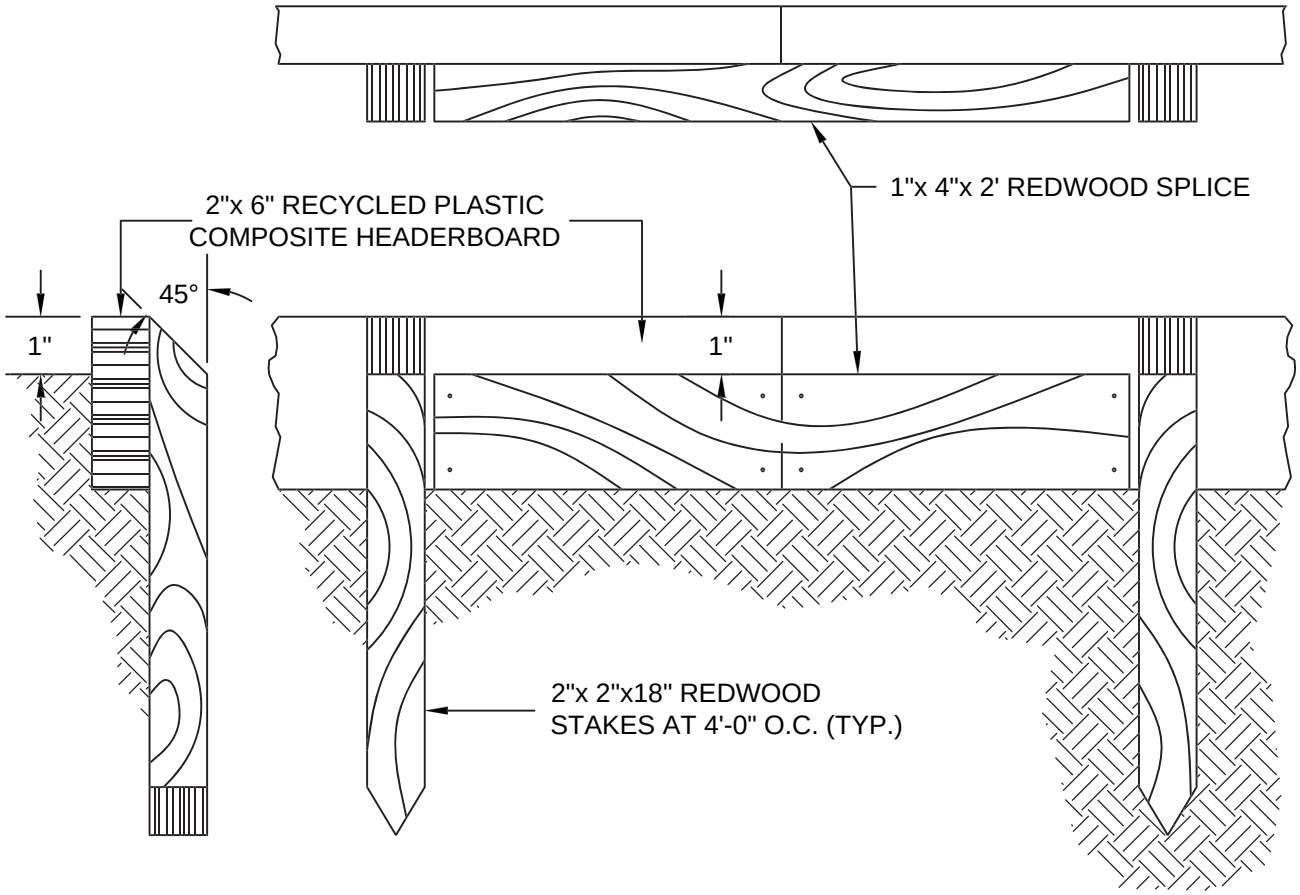

NOTES:

1. INSTALL ALL STAKES AND SPLICES ON PLANTING SIDE OF HEADERBOARD.
2. FASTEN HEADERBOARD WITH GALVANIZED DECK SCREWS.

(Not To Scale)

REGISTERED PROFESSIONAL ENGINEER
BALWINDER S. GREWAL
C 49122
EXP. 9/30/14
STATE OF CALIFORNIA

PUBLIC WORKS DEPARTMENT

THE CITY OF BRENTWOOD

HEADERBOARD ON PLANTING AREAS

BALWINDER S. GREWAL CITY ENGINEER

DATE:	AUG. 15, 2003	SHEET No.
REVISED:	DEC. 31, 2013	L-5

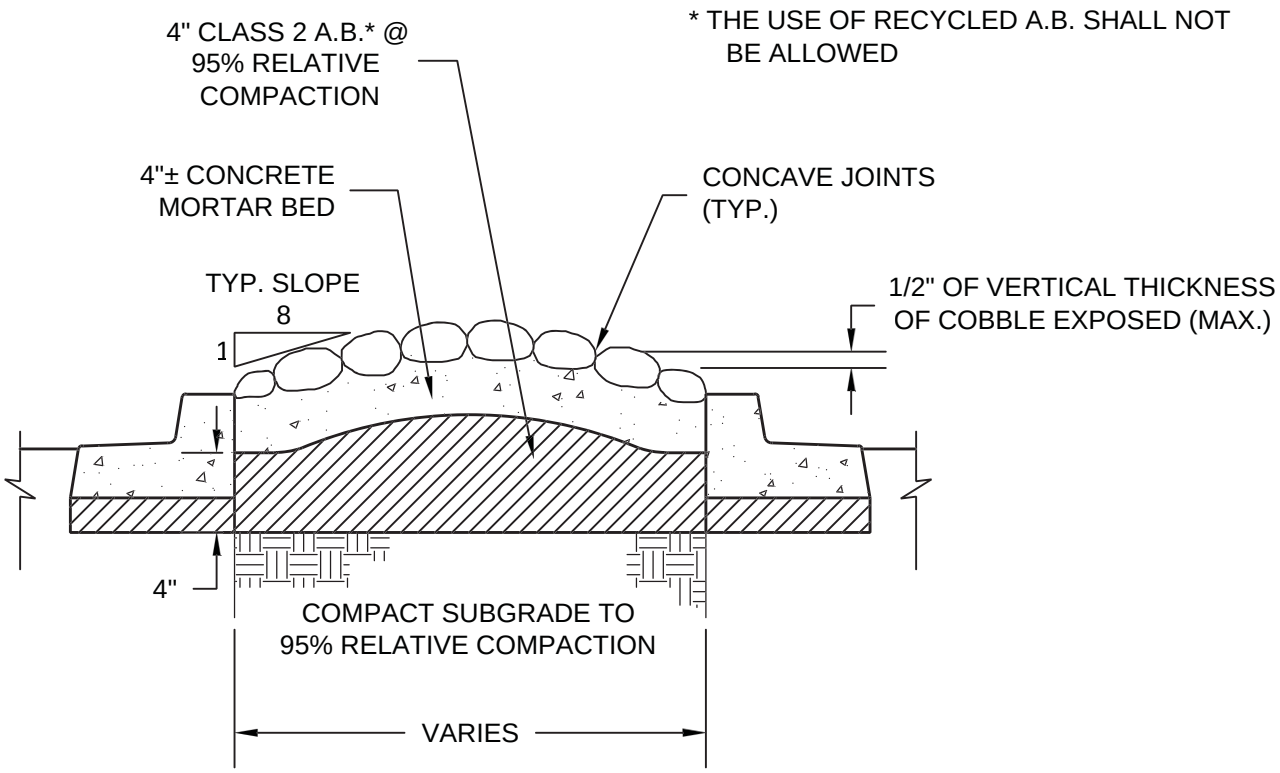

INSTALLATION NOTES:

1. COBBLES SHALL BE 2" TO 4" Ø NOIYO OR APPROVED EQUAL (SUBMIT SAMPLE FOR REVIEW), SMOOTH AND ROUNDED WITH NO SHARP OR BROKEN EDGES.
2. CLEAN COBBLES OF MUD AND DUST PRIOR TO PLACEMENT.
3. SET COBBLES RANDOMLY BUT WITH SMALLER COBBLES NEAR EDGES OF PAVING.
4. AFTER COBBLES ARE SET, WASH ALL CONCRETE OFF; LET DRY AND APPLY 2 COATS OF UNDILUTED GLAZE AND SEAL CONCRETE AND MASONRY LACQUER OR EQUIVALENT AS APPROVED BY PARKS AND RECREATION DEPARTMENT.
5. MOISTURE CONTENT SHALL BE 3% ABOVE OPTIMUM.

(Not To Scale)

REGISTERED PROFESSIONAL ENGINEER
BALWINDER S. GREWAL
C 49122
EXP. 9/30/14
STATE OF CALIFORNIA

PUBLIC WORKS DEPARTMENT

THE CITY OF BRENTWOOD

COBBLE STONE PAVING

BALWINDER S. GREWAL CITY ENGINEER

DATE:	JUNE 20, 2003	SHEET No.
REVISED:	DEC. 31, 2013	L-6

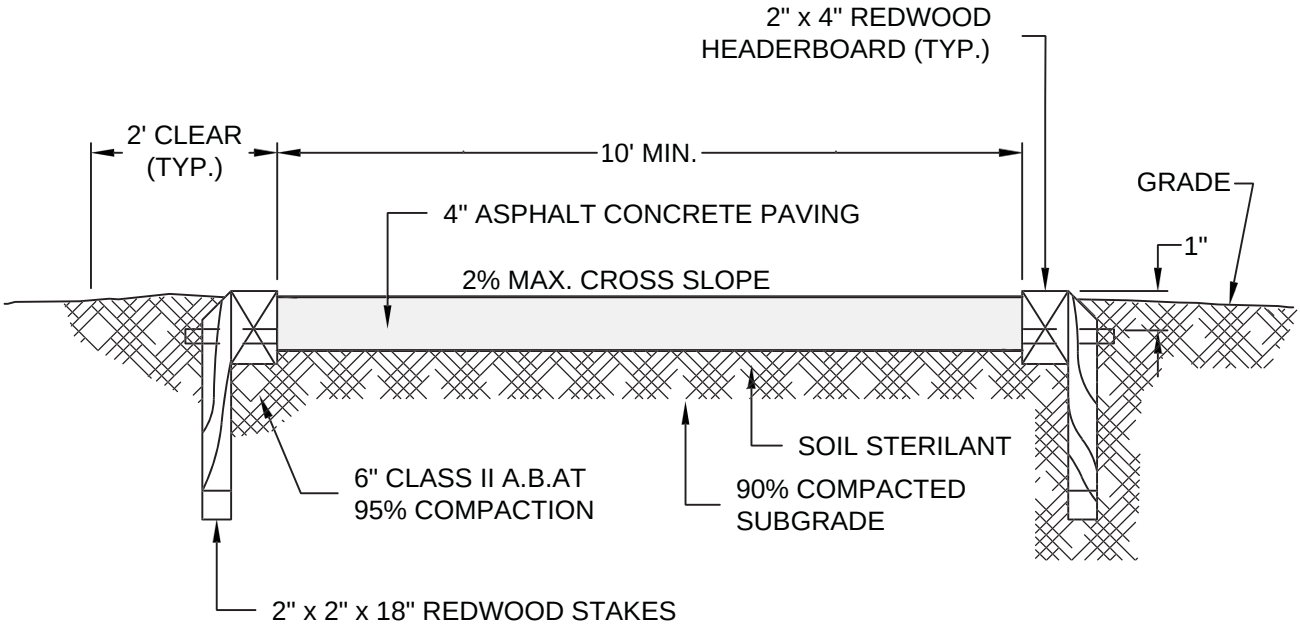

NOTES:

1. HEADERBOARD SHALL BE REDWOOD, ROUGH, CONTRUCTION HEART GRADE, IN ACCORDANCE TO CALIFORNIA ASSOCIATION GRADING RULES.
2. ALL NAILS SHALL BE GALVANIZED.
3. THE USE OF RECYCLED A.B. SHALL NOT BE ALLOWED.
4. FOR ADDITIONAL REQUIREMENTS, SEE THE CURRENT "CREEK TRAILS AND REVEGETATION MASTER PLAN."

(Not To Scale)

REGISTERED PROFESSIONAL ENGINEER
BALWINDER S. GREWAL
C 49122
EXP. 9/30/14
STATE OF CALIFORNIA

PUBLIC WORKS DEPARTMENT

THE CITY OF BRENTWOOD

ASPHALTIC CONCRETE WALK DETAIL

BALWINDER S. GREWAL CITY ENGINEER

DATE:	JULY 12, 2007	SHEET No.
REVISED:	DEC. 31, 2013	L-7

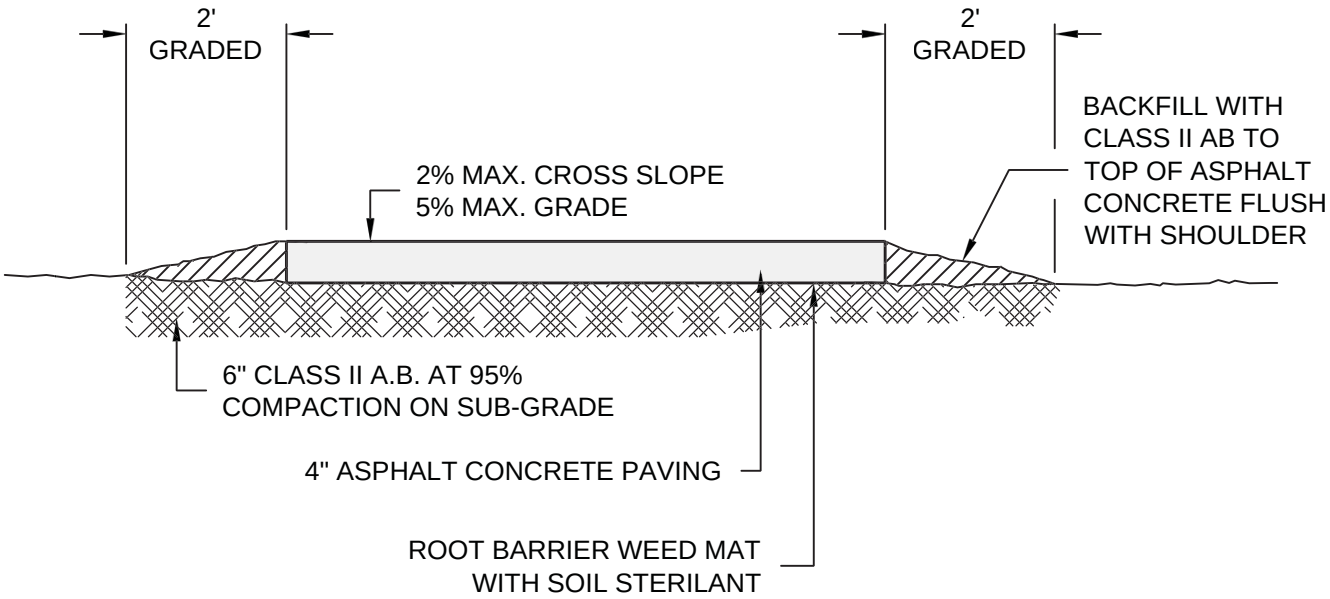

NOTES:

1. BIKE TRAIL SHALL BE CLASS 1 BIKEWAY.
2. BIKE PATHS CLOSER THAN 5' FROM THE EDGE OF THE TRAVEL WAY SHALL INCLUDE AN APPROVED PHYSICAL BARRIER (I.E. CHAINLINK FENCES OF DENSE SHRUBS) TO PREVENT BICYCLISTS FROM ENCROACHING INTO THE TRAVEL WAY.
3. THE USE OF RECYCLED A.B. SHALL NOT BE ALLOWED.

(Not To Scale)

REGISTERED PROFESSIONAL ENGINEER
BALWINDER S. GREWAL
C 49122
EXP. 9/30/14
STATE OF CALIFORNIA

PUBLIC WORKS DEPARTMENT

THE CITY OF BRENTWOOD

BIKE TRAIL PAVING DETAIL

BALWINDER S. GREWAL CITY ENGINEER

DATE:	JUNE 20, 2003	SHEET No.
REVISED:	DEC. 31, 2013	L-8

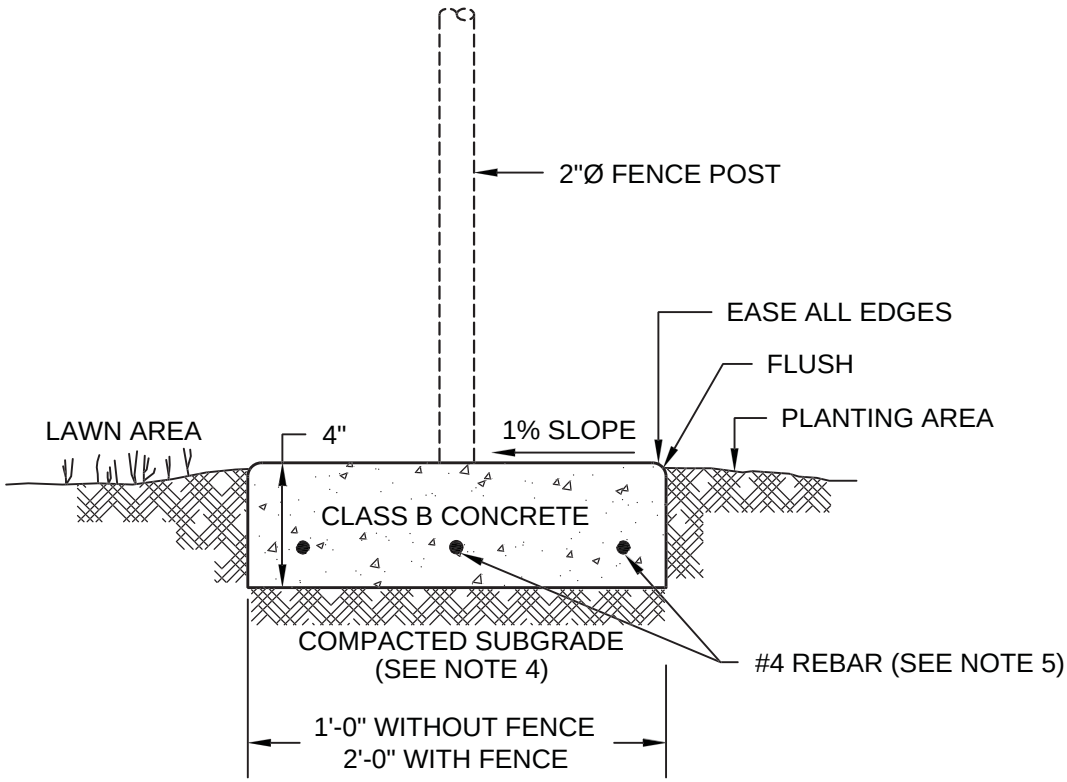

NOTES:

1. PROVIDE WEAKENED PLANE JOINTS 1" DEEP AT 5'-0" ON CENTER.
2. PROVIDE EXPANSION JOINTS AT 10'-0" INTERVALS AND WHERE CONCRETE WALK JOINS ANOTHER.
3. BROOM FINISH UNLESS OTHERWISE SPRCIFIED.
4. COMPACT SUBGRADE TO 90% OF RELATIVE COMPACTION AND WITHIN 3% OF OPTIMUM MOISTURE.
5. PROVIDE 1-#4 REBAR FOR 1'-0" AND 2-#4 REBAR ON 2'-0" MOWBAND.

(Not To Scale)

REGISTERED PROFESSIONAL ENGINEER
BALWINDER S. GREWAL
C 49122
EXP. 9/30/14
STATE OF CALIFORNIA

PUBLIC WORKS DEPARTMENT

THE CITY OF BRENTWOOD

CONCRETE MOWING STRIP

BALWINDER S. GREWAL CITY ENGINEER

DATE:	MAR. 30, 2001	SHEET No.
REVISED:	DEC. 31, 2013	L-9

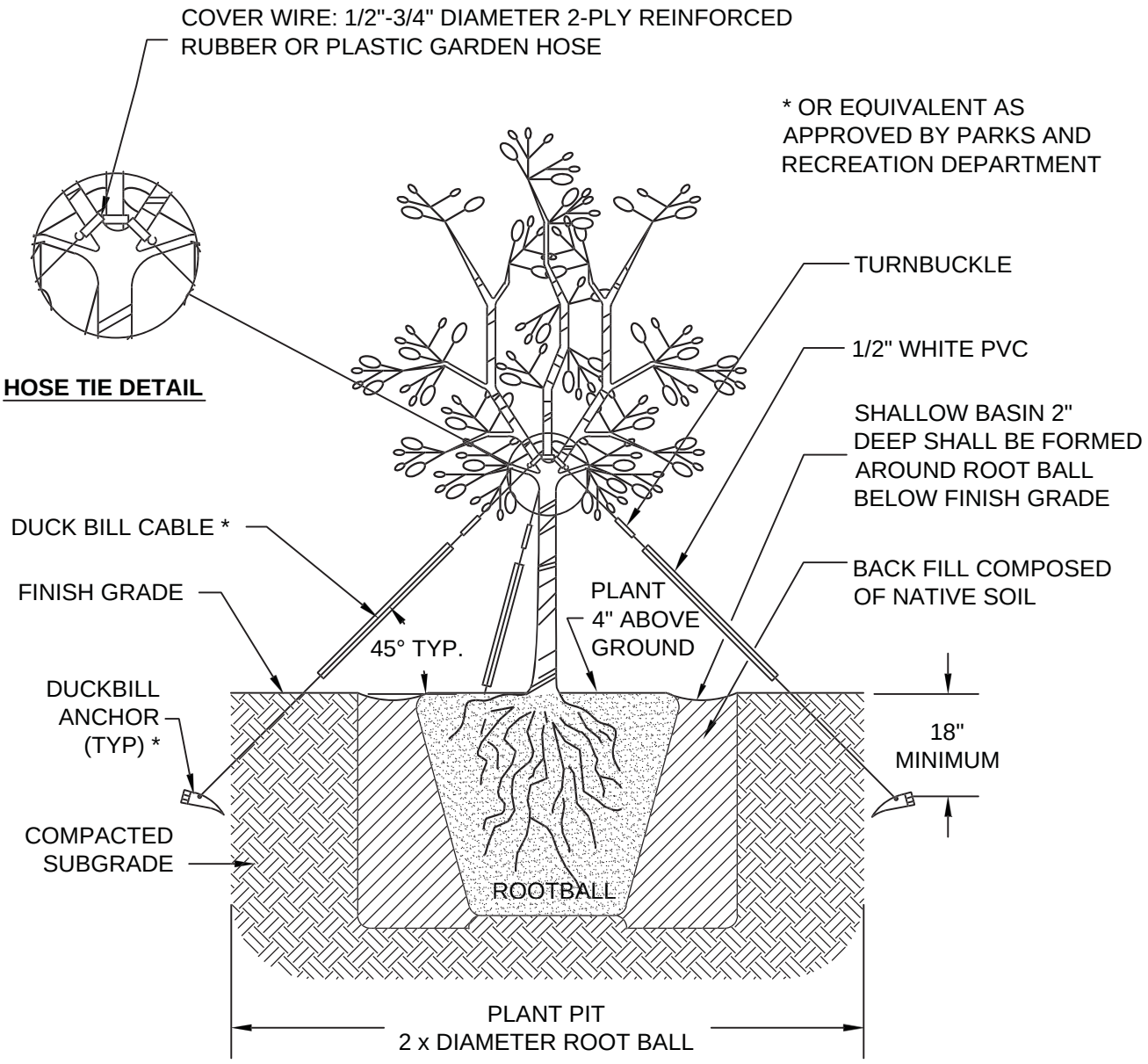

NOTE:

ALL 30" BOX TREES OR LARGER, INCLUDING MULTI-TRUNK SPECIMENS, SHALL BE GUYED AS SHOWN.

(Not To Scale)

REGISTERED PROFESSIONAL ENGINEER
BALWINDER S. GREWAL
C 49122
EXP. 9/30/14
STATE OF CALIFORNIA

PUBLIC WORKS DEPARTMENT

THE CITY OF BRENTWOOD

TYPICAL TREE GUYING FOR 24" BOX

BALWINDER S. GREWAL CITY ENGINEER

DATE:	JUNE 16, 2003	SHEET No.
REVISED:	DEC. 31, 2013	L-10

This page left intentionally blank

THE CITY OF BRENTWOOD

HERITAGE ▪ VISION ▪ OPPORTUNITY

(Not To Scale)

REGISTERED PROFESSIONAL ENGINEER
BALWINDER S. GREWAL
C 49122
EXP. 9/30/14
STATE OF CALIFORNIA

PUBLIC WORKS DEPARTMENT

THE CITY OF BRENTWOOD

BALWINDER S. GREWAL CITY ENGINEER

DATE:

REVISED:

SHEET No.

L-11

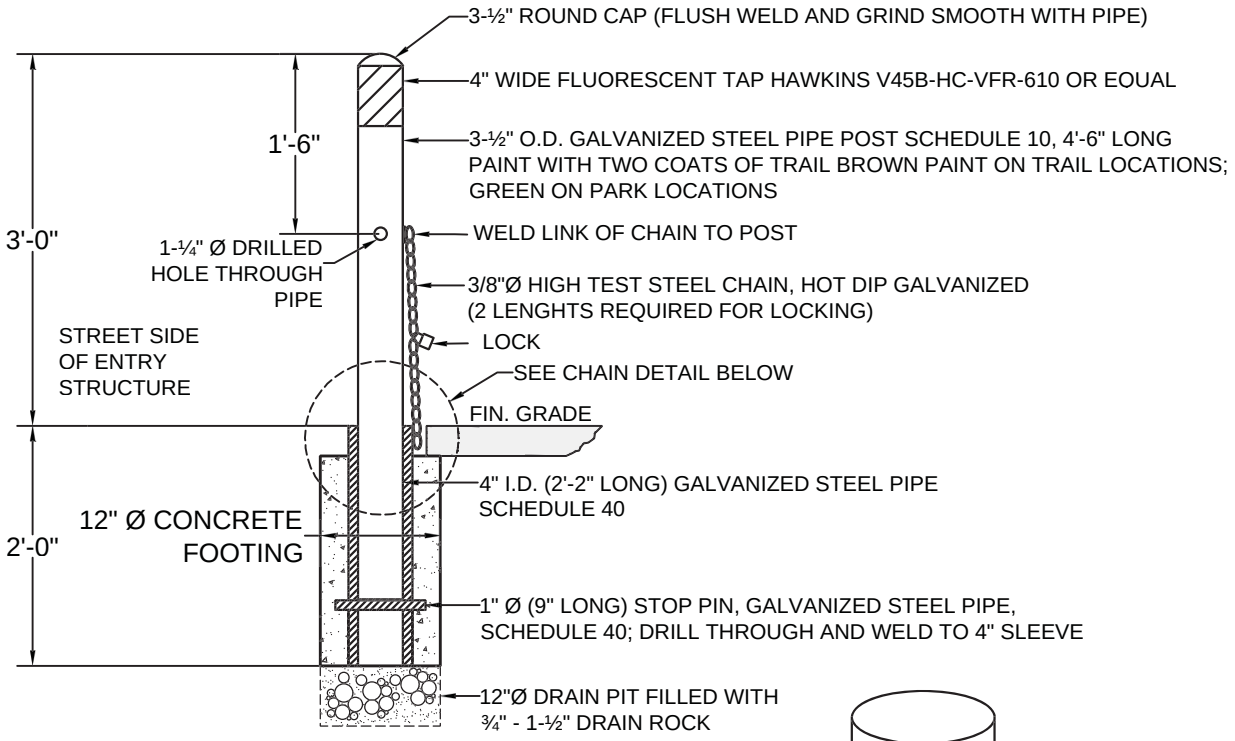

SECTION

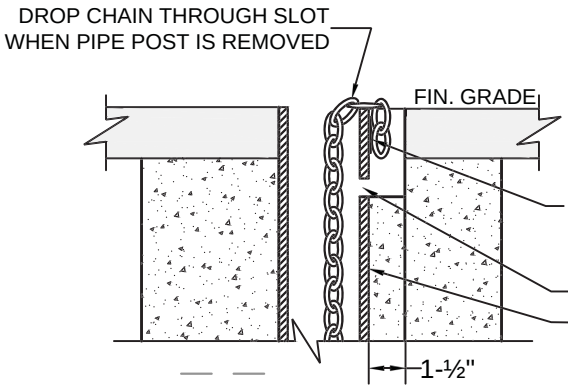

CHAIN DETAIL

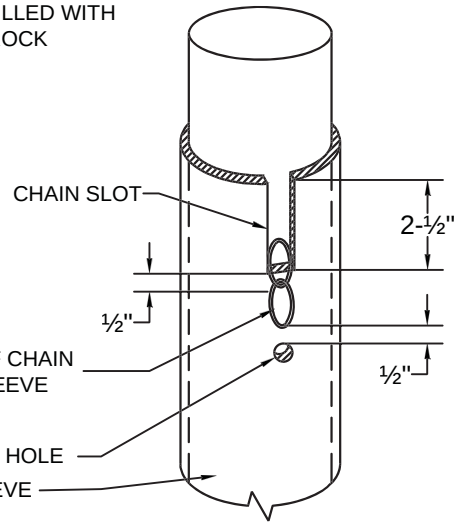

SLOT DETAIL

NOTES:

1. CHAIN LINK CHAIN AND SLOT SHALL BE INSTALLED PARALLEL TO CENTERLINE OF TRAIL.
2. FOR BOLLARD LIGHTS, SEE SL-8.

(Not To Scale)

REGISTERED PROFESSIONAL ENGINEER
BALWINDER S. GREWAL
C 49122
EXP. 9/30/14
STATE OF CALIFORNIA

PUBLIC WORKS DEPARTMENT

THE CITY OF BRENTWOOD

REMOVABLE METAL BOLLARD

BALWINDER S. GREWAL CITY ENGINEER

APR. 29, 2005

DEC. 31, 2013

SHEET No.
L-12

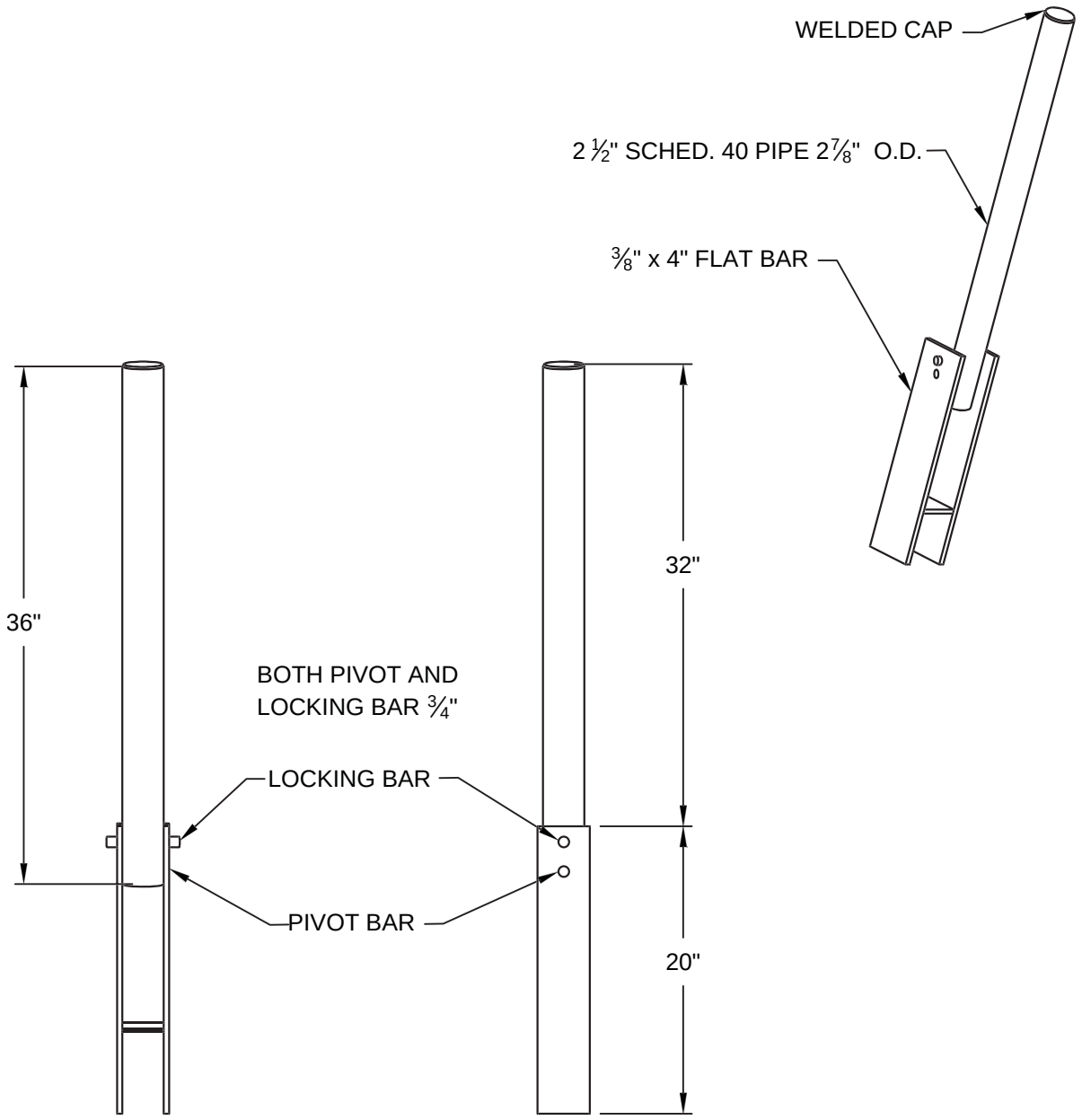

COLLAPSIBLE BOLLARD

CAT # PW/CGP

NOTES:

1. BOLLARDS CAN BE OBTAINED THROUGH PLACER WATERWORKS INC. OR APPROVED EQUAL.
2. SEALED WITH PITTSBURG PAINT PRODUCT 95-912 (YELLOW) 68% WEIGHT SOLIDS.

(Not To Scale)

REGISTERED PROFESSIONAL ENGINEER
BALWINDER S. GREWAL
C 49122
EXP. 9/30/14
STATE OF CALIFORNIA

PUBLIC WORKS DEPARTMENT

THE CITY OF BRENTWOOD

COLLAPSIBLE METAL BOLLARD DETAILS (1)

BALWINDER S. GREWAL CITY ENGINEER

DATE: DEC. 31, 2013

REVISED:

SHEET No. **L-12a**

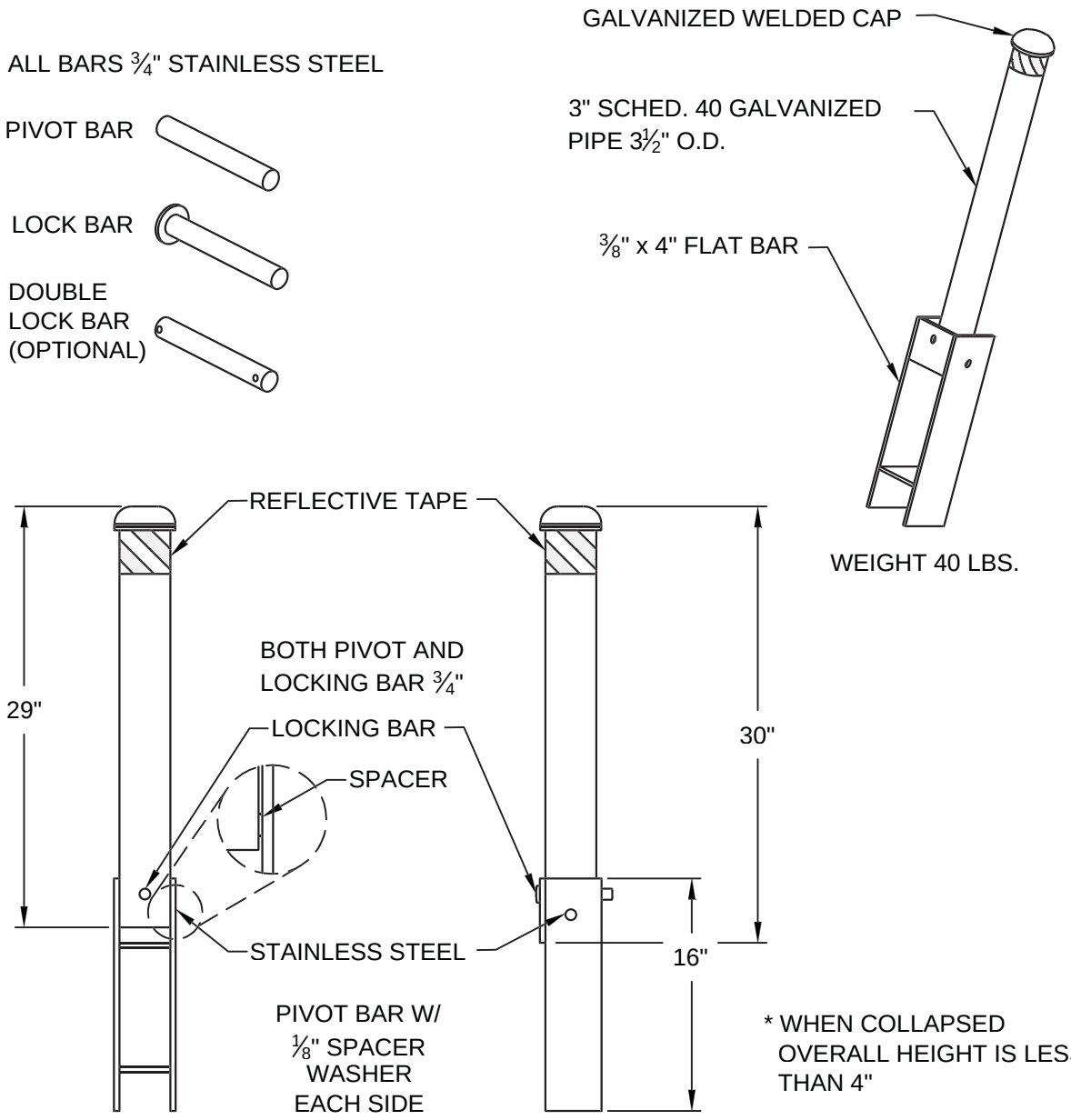

COLLAPSIBLE METAL BOLLARD

CAT # PW/CGP-3

NOTES:

1. BOLLARDS CAN BE OBTAINED THROUGH PLACER WATERWORKS INC. OR APPROVED EQUAL.
2. IF PAINTED GALVANIZED PIPE IS ETCHED THEN COATED W/ URETHANE COATING. STANDARD COLOR YELLOW.

(Not To Scale)

REGISTERED PROFESSIONAL ENGINEER
BALWINDER S. GREWAL
C 49122
EXP. 9/30/14
STATE OF CALIFORNIA

PUBLIC WORKS DEPARTMENT

THE CITY OF BRENTWOOD

COLLAPSIBLE METAL BOLLARD DETAILS (2)

BALWINDER S. GREWAL CITY ENGINEER

DATE: DEC. 31, 2013

REVISED:

SHEET No. **L-12b**

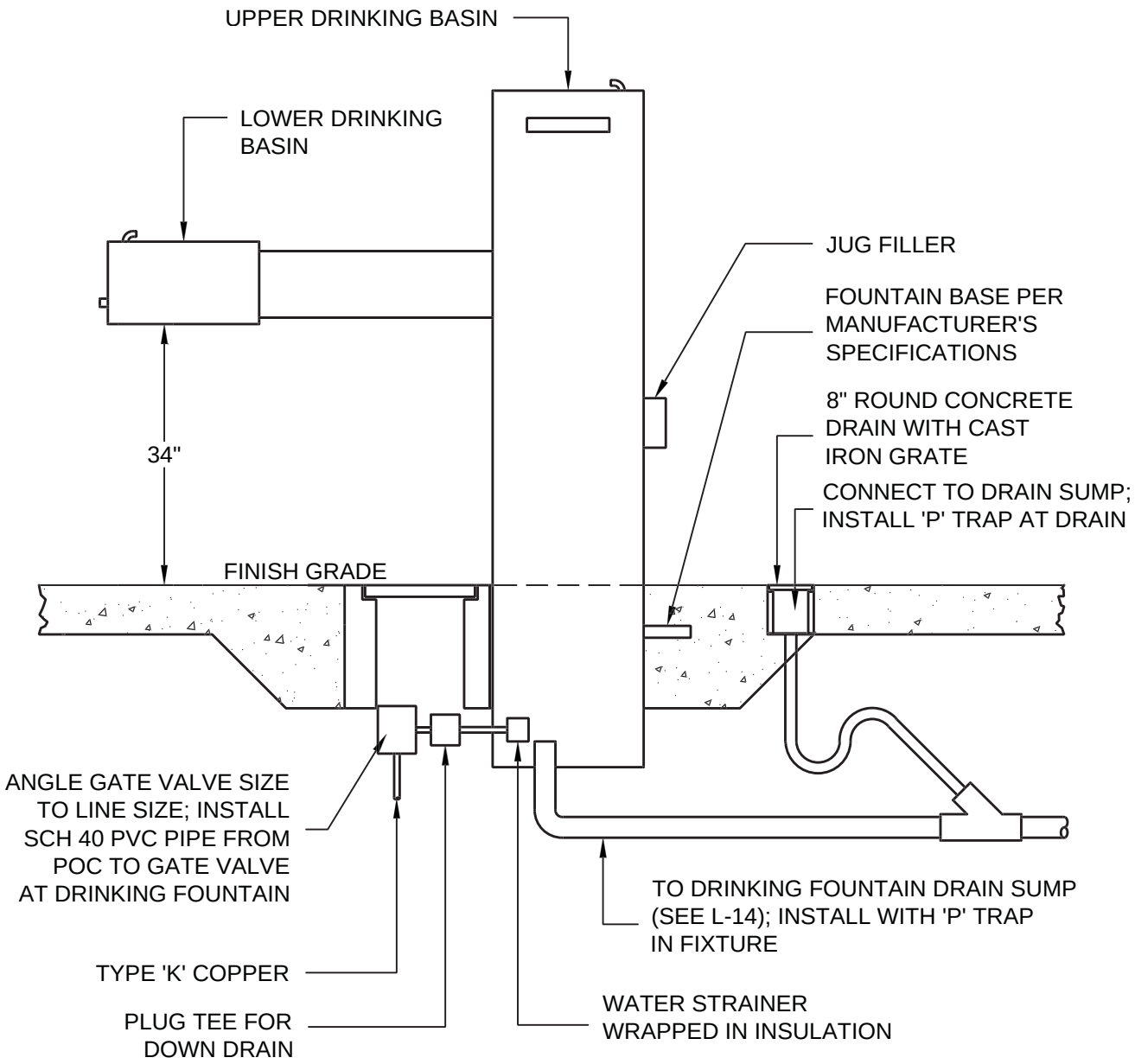

NOTES:

1. PLACEMENT OF DRINKING FOUNTAIN SHALL BE APPROVED BY THE PARKS AND RECREATION DEPARTMENT PRIOR TO INSTALLATION.
2. PROVIDE A MINIMUM CLEARANCE OF 3' ON ALL SIDES OF THE DRINKING FOUNTAIN.
3. MODEL #MDF 440 SMSS FROM **MOST DEPENDABLE FOUNTAINS** AT PHONE NUMBER (800) 552-6331 OR APPROVED EQUAL.

(Not To Scale)

REGISTERED PROFESSIONAL ENGINEER
BALWINDER S. GREWAL
C 49122
EXP. 9/30/14
STATE OF CALIFORNIA

PUBLIC WORKS DEPARTMENT

THE CITY OF BRENTWOOD

STAINLESS STEEL DRINKING FOUNTAIN

BALWINDER S. GREWAL CITY ENGINEER

DATE:	JUNE 20, 2003	SHEET No.
REVISED:	DEC. 31, 2013	L-13

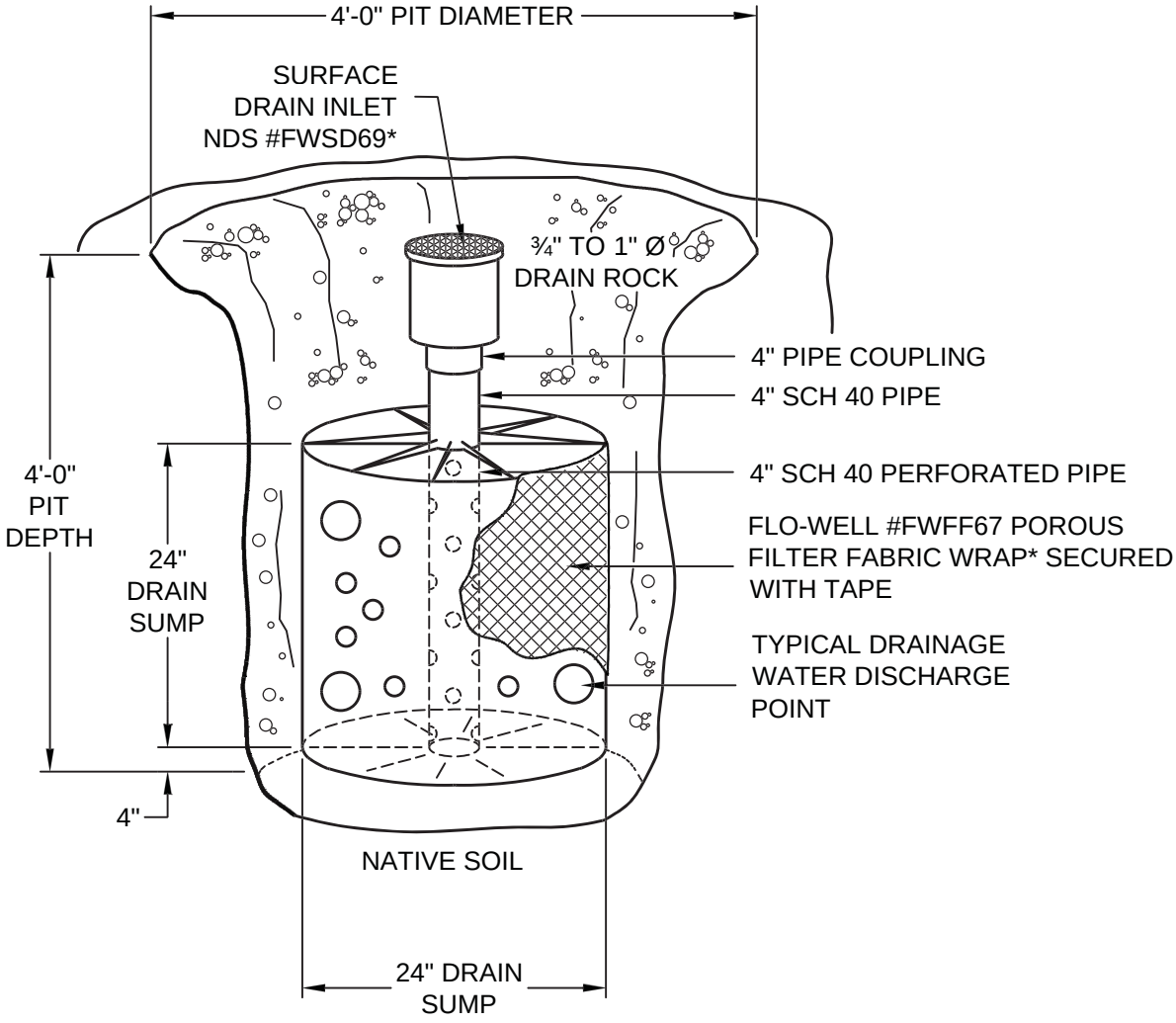

* OR AS APPROVED BY THE PARKS AND RECREATION DEPARTMENT.

(Not To Scale)

REGISTERED PROFESSIONAL ENGINEER
BALWINDER S. GREWAL
C 49122
EXP. 9/30/14
STATE OF CALIFORNIA

PUBLIC WORKS DEPARTMENT

THE CITY OF BRENTWOOD

DRAIN SUMP

BALWINDER S. GREWAL CITY ENGINEER

DATE:	JULY 31, 2003	SHEET No.
REVISED:	DEC. 31, 2013	L-14

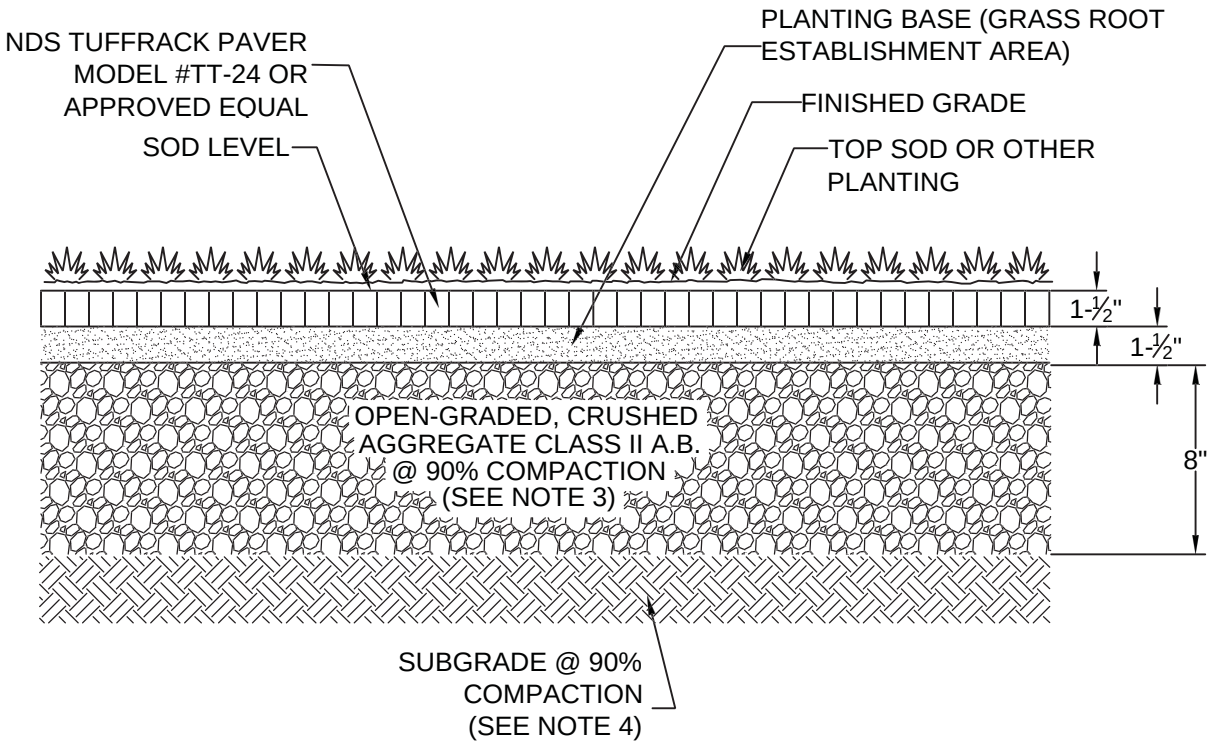

NOTES:

1 TURF CELLS SHALL BE USED WHERE TURF AREAS ARE USED WITH VEHICULAR ACCESS AND INFREQUENT PARKING SUCH AS RESIDENTIAL DRIVEWAYS, OVERFLOW PARKING AREAS, THE OUTER ⅓ OF COMMERCIAL AND RETAIL DEVELOPMENTS WHERE PARKING SPACE IS USED LESS OFTEN AND FOR SHORTER PERIODS OF TIME, FIRE/ EMERGENCY ACCESS ROADS, UTILITY ROADS, STREET SHOULDERS.

2. SLOPE SHALL BE EQUAL TO OR LESS THAN 5%.

3. BASE COURSE SHALL BE OPEN-GRADED AND COMPOSED OF CRUSHED ROCK (NOT ROUNDED).

4. SUBGRADE SHALL BE DESIGNED FOR ANTICIPATED LOADS.

5. WHERE THERE ARE NO DEEP PERMEABLE SOILS, UNDERDRAIN SYSTEM SHALL BE PROVIDED.

6. IRRIGATION SHALL BE REQUIRED TO MAINTAIN TURF.

(Not To Scale)

REGISTERED PROFESSIONAL ENGINEER
BALWINDER S. GREWAL
C 49122
EXP. 9/30/14
STATE OF CALIFORNIA

PUBLIC WORKS DEPARTMENT

THE CITY OF BRENTWOOD

TURF CELL

BALWINDER S. GREWAL CITY ENGINEER

DATE:	JULY 31, 2003	SHEET No.
REVISED:	DEC. 31, 2013	L-15

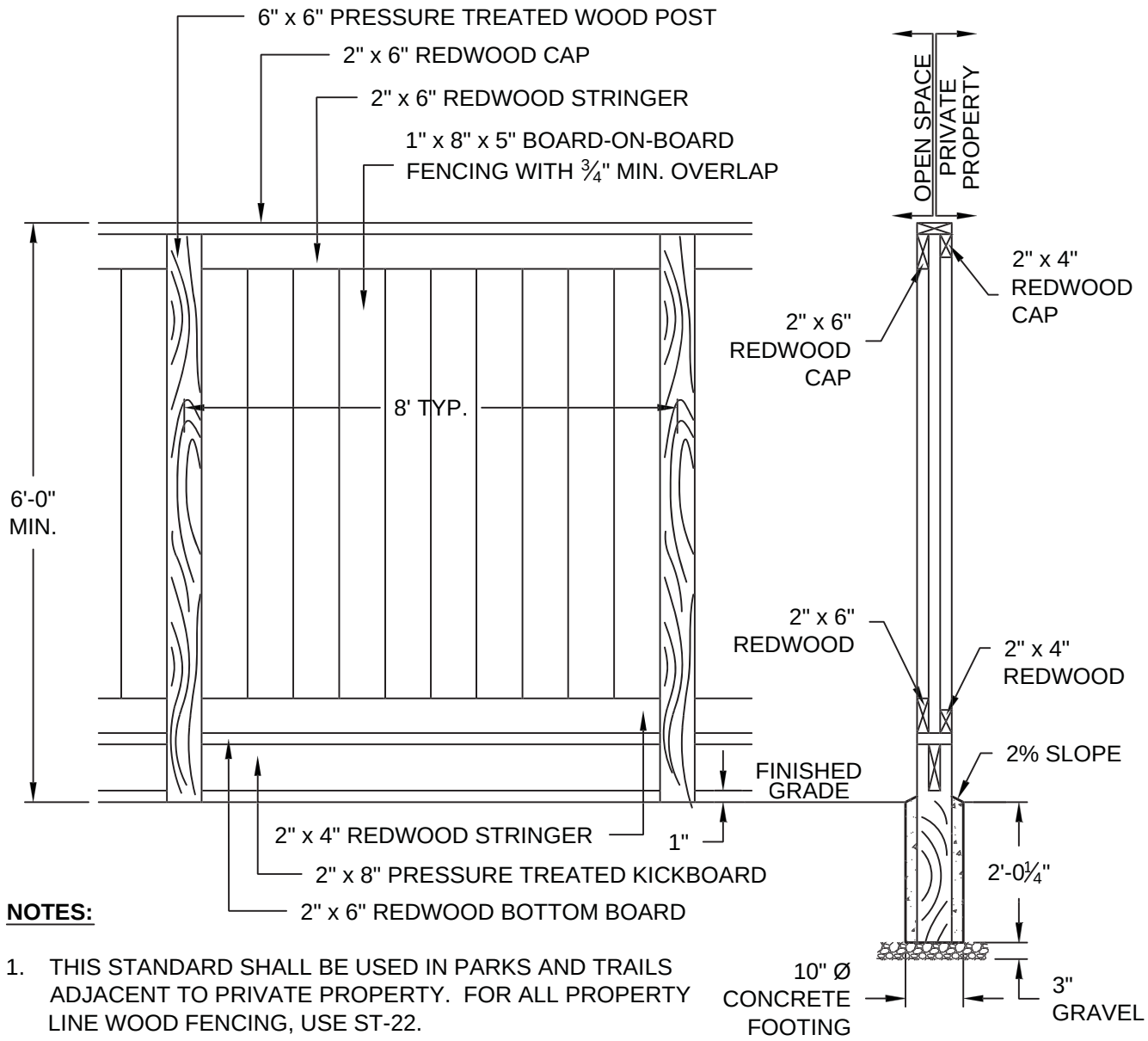

NOTES:

1. THIS STANDARD SHALL BE USED IN PARKS AND TRAILS ADJACENT TO PRIVATE PROPERTY. FOR ALL PROPERTY LINE WOOD FENCING, USE ST-22.

2. POST AND KICKBOARD SHALL BE PRESSURE TREATED HEM-FIR, LP-22, NO. 2 AND BETTER WITH CEDAR TONE COLOR.

3. RAILS, INFILL AND TRIM SHALL BE CONSTRUCTION COMMON REDWOOD.

4. ALL HARDWARE SHALL BE HOT-DIPPED GALVANIZED STEEL.

(Not To Scale)

REGISTERED PROFESSIONAL ENGINEER
BALWINDER S. GREWAL
C 49122
EXP. 9/30/14
STATE OF CALIFORNIA

PUBLIC WORKS DEPARTMENT

THE CITY OF BRENTWOOD

ENHANCED WOOD FENCE

BALWINDER S. GREWAL CITY ENGINEER

DATE:	JUNE 16, 2003	SHEET No.
REVISED:	DEC. 31, 2013	L-16

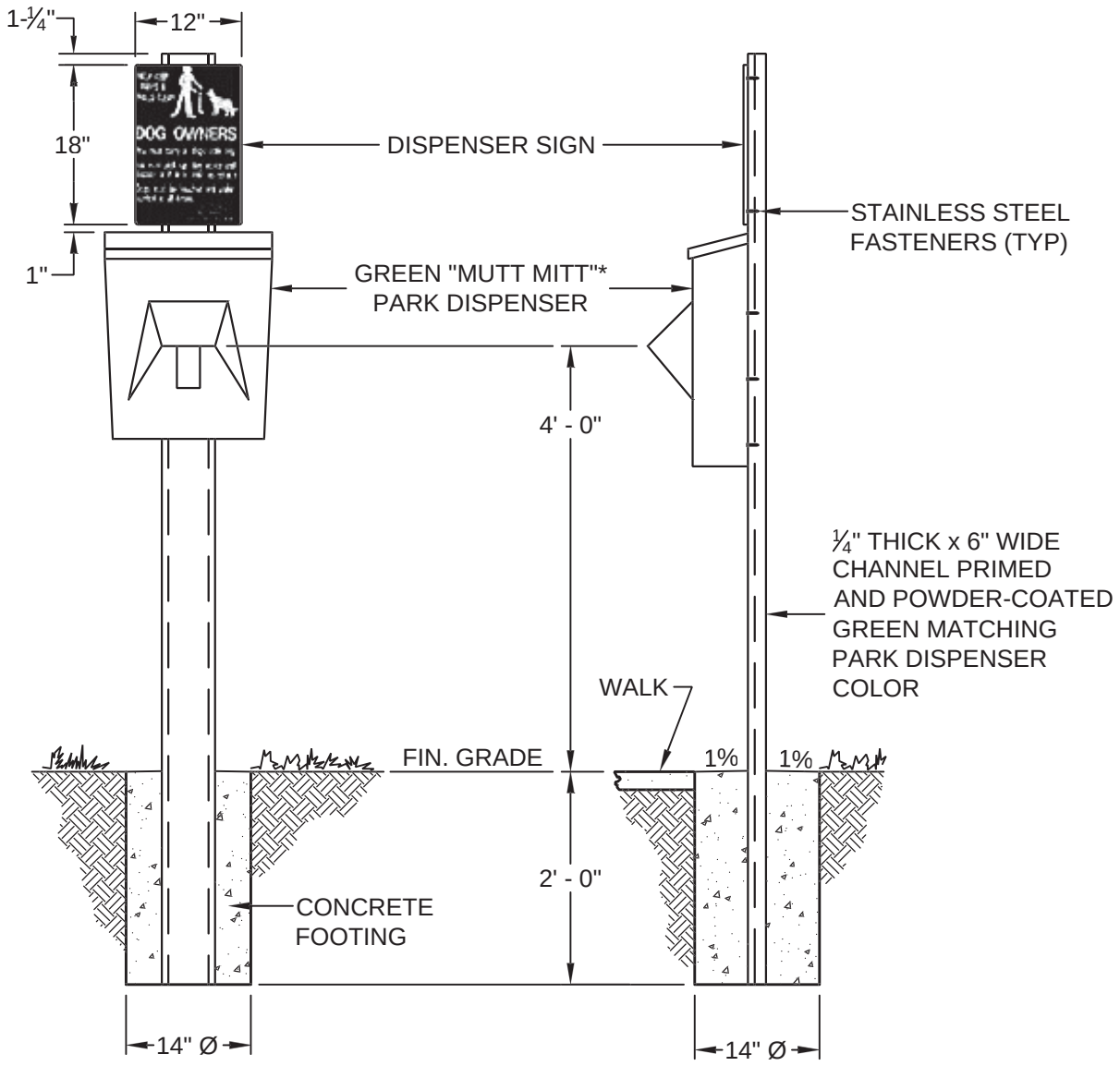

FRONT ELEVATION **SIDE ELEVATION**

* OR EQUIVALENT AS APPROVED BY THE PARKS AND RECREATION DEPARTMENT.

(Not To Scale)

REGISTERED PROFESSIONAL ENGINEER
BALWINDER S. GREWAL
C 49122
EXP. 9/30/14
STATE OF CALIFORNIA

PUBLIC WORKS DEPARTMENT

THE CITY OF BRENTWOOD

PARK DISPENSER

BALWINDER S. GREWAL CITY ENGINEER

DATE:	AUG. 1, 2003	SHEET No.
REVISED:	DEC. 31, 2013	L-17

This page is left intentionally blank

THE CITY OF BRENTWOOD

(Not To Scale)

REGISTERED PROFESSIONAL ENGINEER
BALWINDER S. GREWAL
C 49122
EXP. 9/30/14
STATE OF CALIFORNIA

PUBLIC WORKS DEPARTMENT

THE CITY OF BRENTWOOD

BALWINDER S. GREWAL CITY ENGINEER

DATE:

REVISED:

SHEET No.

L-18

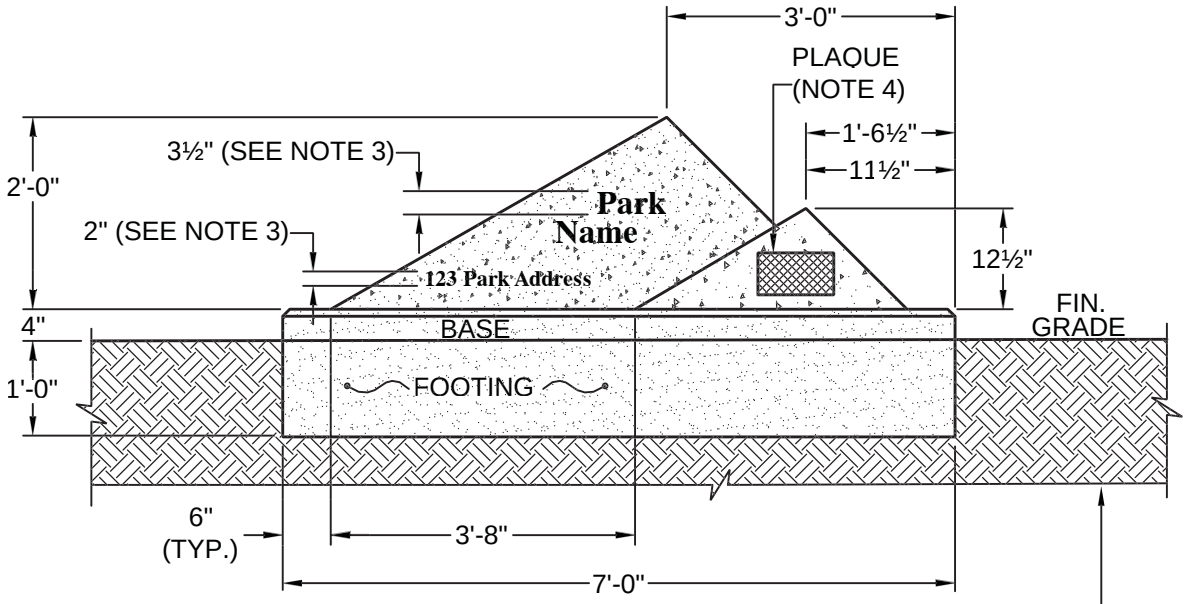

FRONT VIEW

4" A.B. SUBGRADE @ 90% COMPACTION; NO RECYCLED A.B. SHALL BE USED

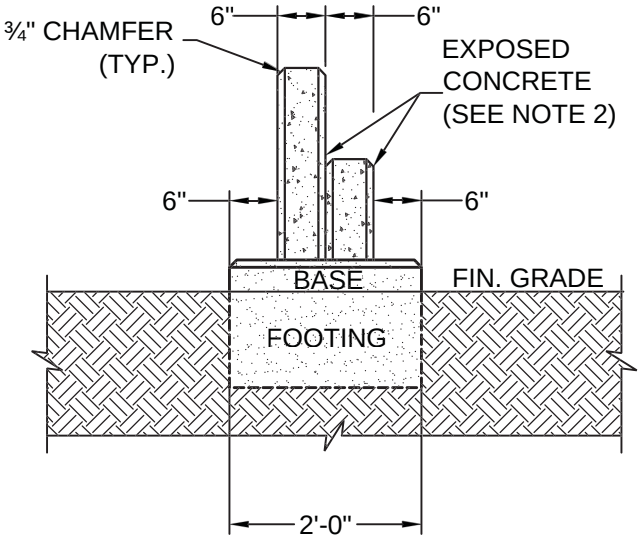

SIDE VIEW

NOTES:

1. CONCRETE COLOR FOR PARK SIGN, BASE AND FOOTING SHALL BE INTEGRAL "PALMS SPRING TAN" OR APPROVED EQUAL.
2. ALL EXPOSED CONCRETE SHALL BE MEDIUM SANDBLAST FINISH.
3. PARK NAME LETTERS SHALL BE 3-½" HIGH, ½" DEPTH IMPRESSED "GARAMOND BOLD" FONT. PARK ADDRESS SHALL BE 2 INCH HIGH "HELVETICA" FONT. ALL LETTERS SHALL BE PAINTED FLAT BLACK.
4. 5-¼" H x 9-¼" W x ½" D RECESSED AREA. PLAQUE TO BE PROVIDED BY THE PARKS AND RECREATION DEPARTMENT.

(Not To Scale)

REGISTERED PROFESSIONAL ENGINEER
BALWINDER S. GREWAL
C 49122
EXP. 9/30/14
STATE OF CALIFORNIA

PUBLIC WORKS DEPARTMENT

THE CITY OF BRENTWOOD

PARK IDENTIFICATION SIGN - I

BALWINDER S. GREWAL CITY ENGINEER

DATE:	APR. 29, 2005	SHEET No.
REVISED:	DEC. 31, 2013	L-19

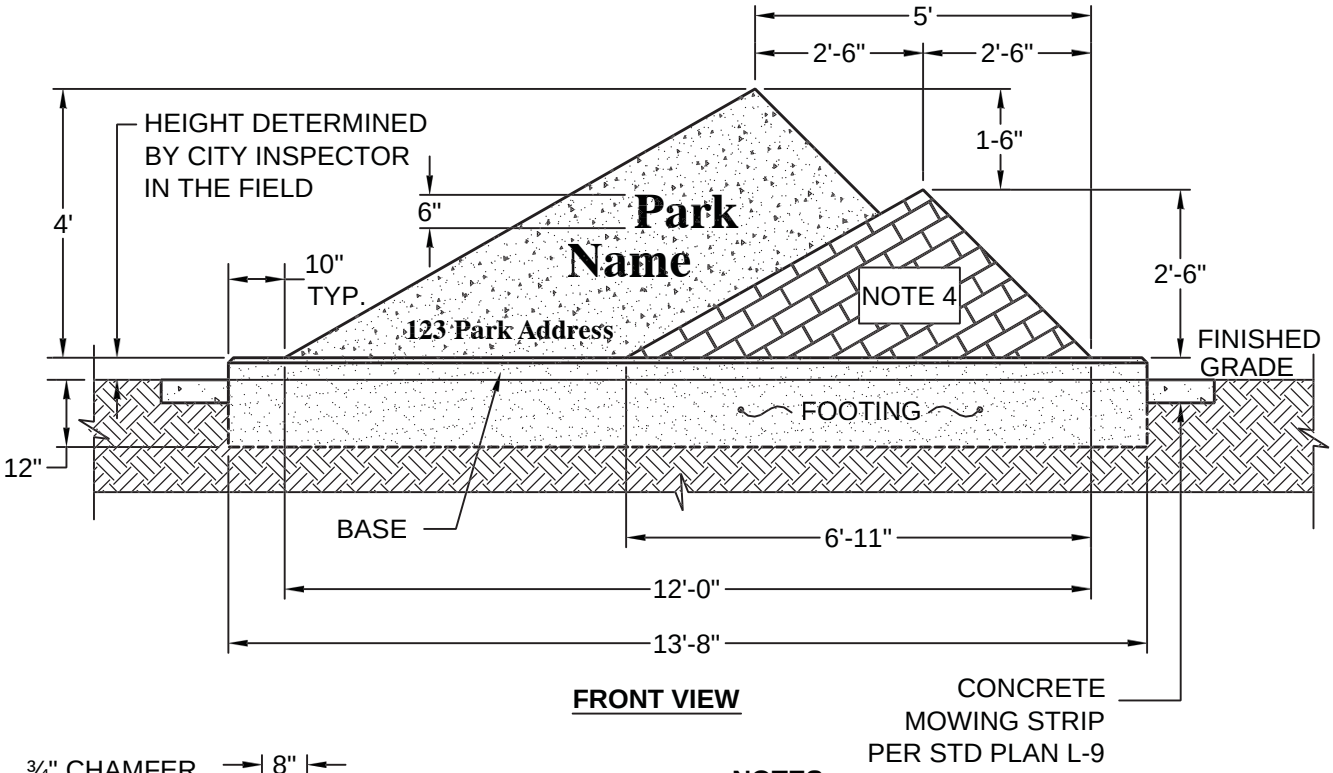

FRONT VIEW

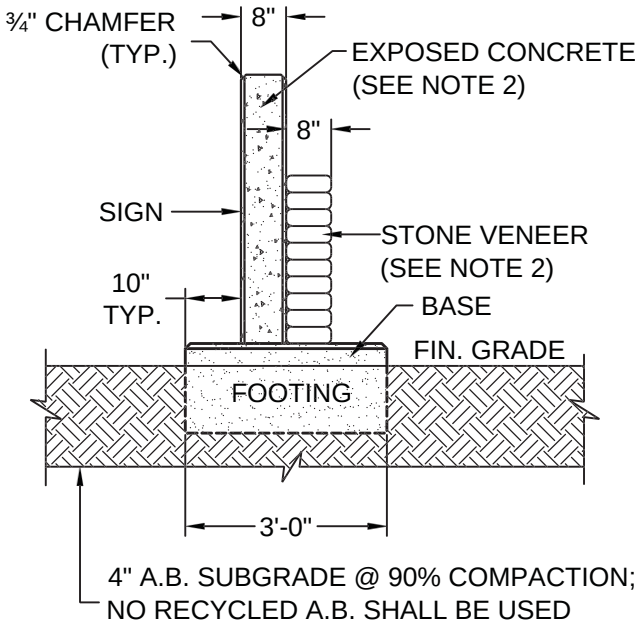

SIDE VIEW

NOTES:

1. CONCRETE COLOR FOR PARK SIGN, BASE AND FOOTING SHALL BE INTEGRAL "PALMS SPRING TAN" OR APPROVED EQUAL.

2. ALL EXPOSED CONCRETE SHALL BE MEDIUM SANDBLAST FINISH; STONE VENEER SHALL BE "EL DORADO STACKED STONE DESERT SHADOWS" OR APPROVED EQUAL.

3. PARK NAME LETTERS SHALL BE 6-INCH HIGH, ½-INCH DEPTH IMPRESSED "TIMES NEW ROMAN BOLD" FONT. PARK ADDRESS LETTERS SHALL BE 3-INCH HIGH "HELVETICA BOLD" FONT. ALL LETTERS SHALL BE PAINTED FLAT BLACK.

4. 10 ¼" H x 18 ¼" W AREA FOR PLAQUE TO BE PROVIDED BY THE PARKS AND RECREATION DEPARTMENT.

(Not To Scale)

REGISTERED PROFESSIONAL ENGINEER
BALWINDER S. GREWAL
C 49122
EXP. 9/30/14
STATE OF CALIFORNIA

PUBLIC WORKS DEPARTMENT

THE CITY OF BRENTWOOD

PARK IDENTIFICATION SIGN - II

BALWINDER S. GREWAL CITY ENGINEER

DATE:	JULY 12, 2007	SHEET No.
REVISED:	DEC. 31, 2013	L-20

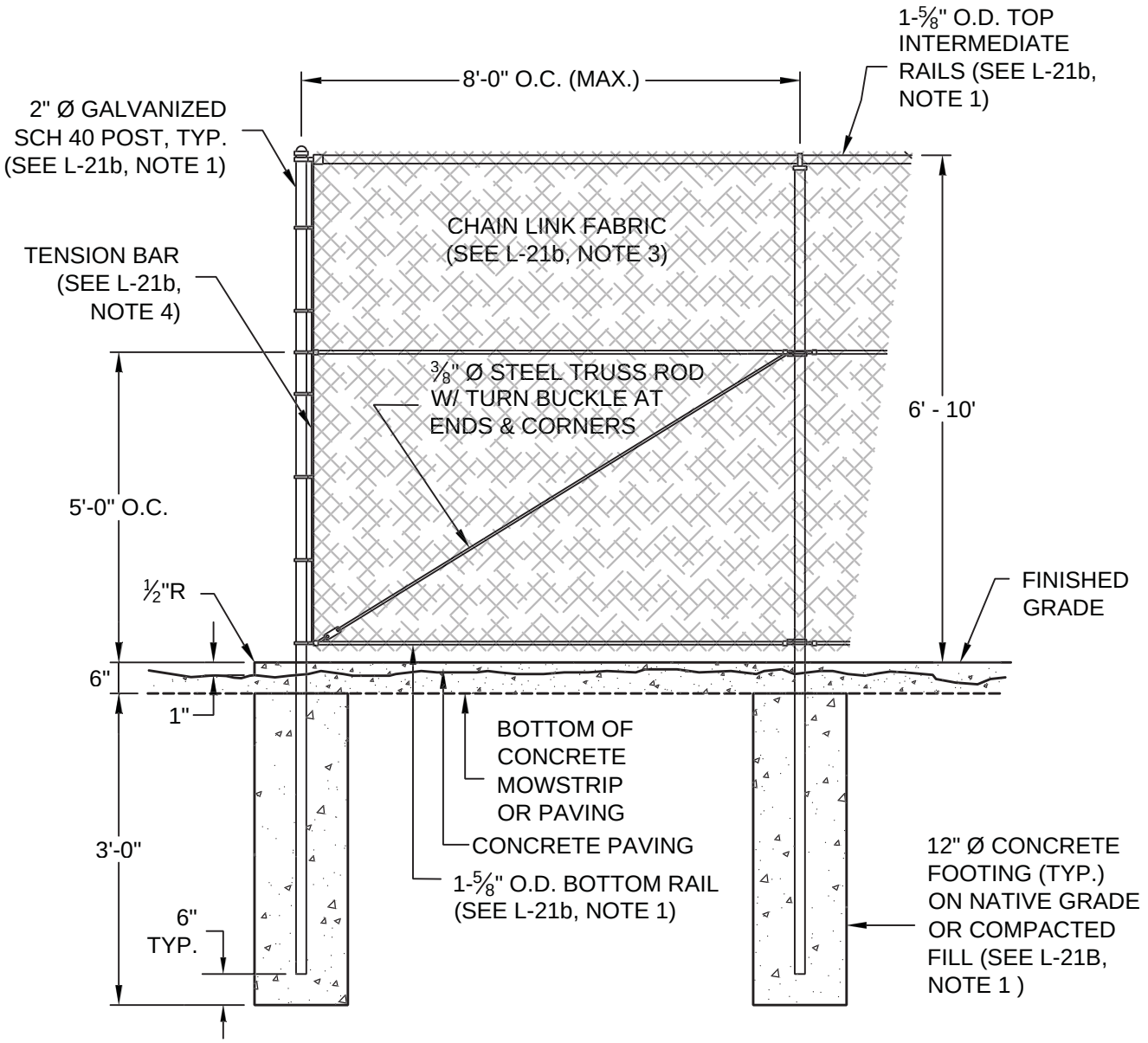

(Not To Scale)

REGISTERED PROFESSIONAL ENGINEER
BALWINDER S. GREWAL
C 49122
EXP. 9/30/14
STATE OF CALIFORNIA

PUBLIC WORKS DEPARTMENT

THE CITY OF BRENTWOOD

CHAIN LINK FENCE

BALWINDER S. GREWAL CITY ENGINEER

DATE:	JAN. 23, 2006	SHEET No.
REVISED:	DEC. 31, 2013	L-21a

NOTES:

1. INTERMEDIATE & BOTTOM RAILS SHALL BE CUT AND INSTALLED WITH 180° 2-WAY BRACE BANDS AND RAIL ENDS AT THE LINE POSTS; STANDARD BRACE BANDS AND RAIL ENDS AT THE TERMINAL POSTS.

2. ALL METAL MATERIALS SHALL BE BLACK VINYL COATED. ANY MATERIALS WITH DAMAGE TO THE VINYL COATING SHALL EITHER BE REMOVED & REPLACED OR RECOATED IN THE FIELD TO THE SATISFACTION OF THE CITY ENGINEER.

3. CHAIN LINK FABRIC SHALL BE 9 GAUGE CORE, 2" MESH WITH KNUCKLED FINISH TOP & BOTTOM EDGES. IT SHALL BE FASTENED TO END AND CORNER POSTS WITH $\frac{3}{16}$" x $\frac{3}{4}$" HIGH CARBON STEEL.

4. TENSION BAR SHALL HAVE 9 GAUGE CORE BANDS AT 16" INTERVAL.

5. FOOTING SHALL BE 5'-0" DEEP AND 18" IN DIAMETER WHEN THE CHAIN LINK IS 10'-0" IN HEIGHT, IS SLATTED OR HAS A WINDSCREEN APPLIED AND/OR IS RECOMMENDED BY GEOTECHNICAL CONDITIONS.

(Not To Scale)

REGISTERED PROFESSIONAL ENGINEER
BALWINDER S. GREWAL
C 49122
EXP. 9/30/14
STATE OF CALIFORNIA

PUBLIC WORKS DEPARTMENT

THE CITY OF BRENTWOOD

CHAIN LINK FENCE NOTES

BALWINDER S. GREWAL CITY ENGINEER

DATE:	JAN. 23, 2006	SHEET No.
REVISED:	DEC. 31, 2013	L-21b

RAIL ELEVATION

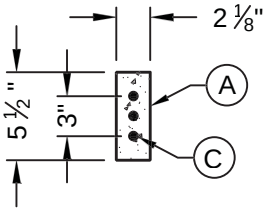

RAIL SECTION

ALL CONSTRUCTION TO CONFORM TO THE LOCAL BUILDING CODES AND/OR U.B.C.

FACTORY CONCRETE SHALL ATTAIN A MINIMUM COMPRESSIVE STRENGTH OF 3000 PSI AT 28 DAYS. POURED IN PLACE CONCRETE SHALL ATTAIN A MINIMUM COMPRESSIVE STRENGTH OF 2500 PSI AT 28 DAYS.

ALL REINFORCING STEEL SHALL CONFORM TO A.S.T.M. A615, GRADE 60.

THE CONTRACTOR SHALL VERIFY ALL CONDITIONS AT THE JOB SITE WITH APPROVED PLANS.

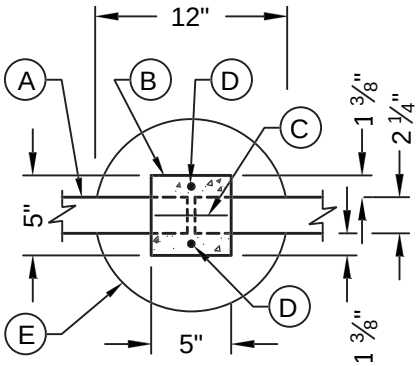

PLAN VIEW

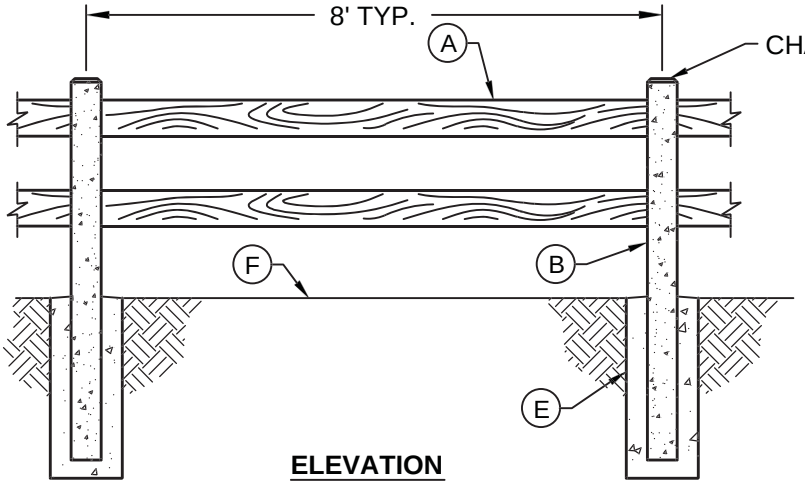

ELEVATION

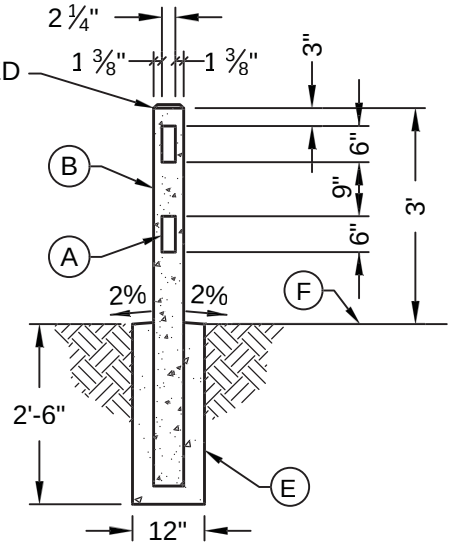

SECTION

ITEM DESCRIPTION

- (A) PRECAST CONC. RAIL
- (B) PRECAST CONC. POST AT 8" O.C. MAX. WITH ¾" CHAMFER AT TOP
- (C) (3) #2 BARS
- (D) (2) #4 BARS
- (E) 12"Ø x 30" DEEP CONCRETE FOOTING
- (F) FINISH GRADE

NOTES:

1. FENCE SYSTEM SHALL BE "WOODCRETE RAIL" OR EQUIVALENT AS APPROVED BY THE PARKS AND RECREATION DEPARTMENT. COLOR SHALL BE SANDLEWOOD.
2. POSTS AND RAILS SHALL HAVE EQUAL TEXTURE ON ALL SIDES.
3. EXPOSED ENDS OF RAILS SHALL BE SMOOTH/BEVELED.
4. SECURE END AND CORNER RAILS WITH CITY-APPROVED INDUSTRIAL ADHESIVE ON INTERIOR OF RAIL AT POST.
5. USE THE MOWBAND DETAIL OF CITY STANDARD PLAN L-9 WHEN ADJACENT TO TURF.

(Not To Scale)

PUBLIC WORKS DEPARTMENT

THE CITY OF BRENTWOOD

TWO RAIL CONCRETE FENCE

BALWINDER S. GREWAL CITY ENGINEER

DATE: DEC. 31, 2013

REVISED:

SHEET No. **L-22a**

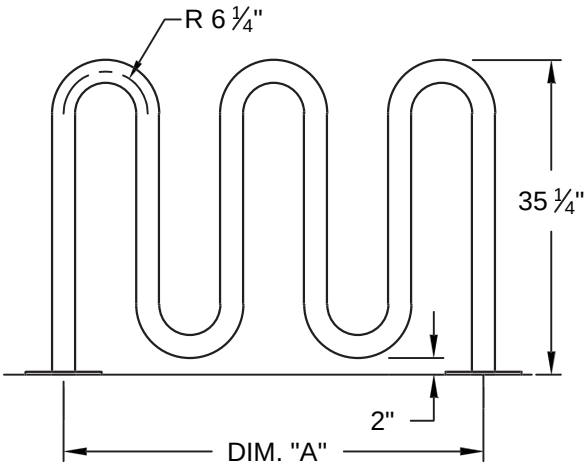

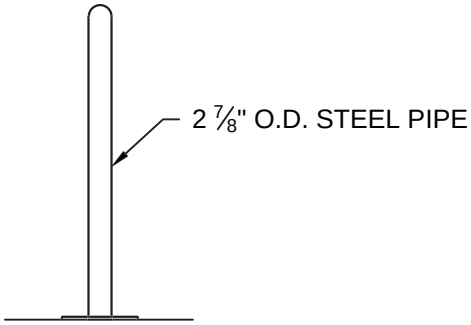

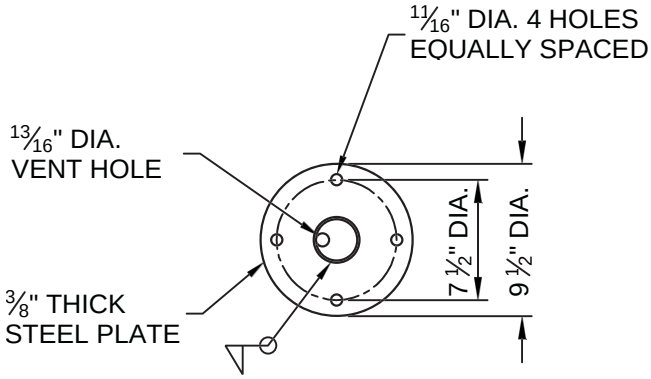

S-2 SURFACE MOUNT

MODEL NO.	PEAKS	DIM "A"
125-20	2	37 ½" LG.
125-30	3	62 ½" LG.
125-40	4	87 ½" LG.
125-50	5	112 ½" LG.

FINISH OPTIONS:

- HOT DIPPED GALVANIZED
- COATED W/ ZINC RICH EPOXY THEN FINISH W/ POLYESTER POWDER COATING

NOTE:

1. ½" x 3 ¾" PLATED EXPANSION ANCHOR BOLTS PROVIDED FOR OPTION S-2.
2. FINISH MATERIAL IS STAINLESS STEEL.
3. SINGLE INVERTED "U" RACK MAY BE USED IN APPROPRIATE SITUATIONS.
4. MATERIALS CAN BE OBTAINED THROUGH DUMOF INC. P.O. BOX 142, MIFFLINTOWN, PA 17059-0142, 125 SERIES OR APPROVED EQUAL.
5. AN ALTERNATIVE SOURCE AND OPTIONS IS BIKE PARKING.COM. TEL. (888) 764-2453, PALMER GROUP LLC, 1728 OCEAN AVE., #132, SAN FRANCISCO, CA 94112.

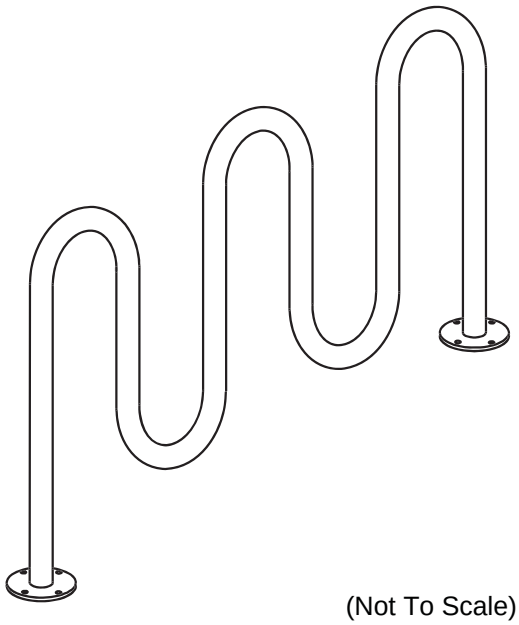

(Not To Scale)

REGISTERED PROFESSIONAL ENGINEER
BALWINDER S. GREWAL
C 49122
EXP. 9/30/14
STATE OF CALIFORNIA

PUBLIC WORKS DEPARTMENT

THE CITY OF BRENTWOOD

STANDARD BIKE RACK

BALWINDER S. GREWAL CITY ENGINEER

DATE: DEC. 31, 2013

REVISED:

SHEET No. L-23

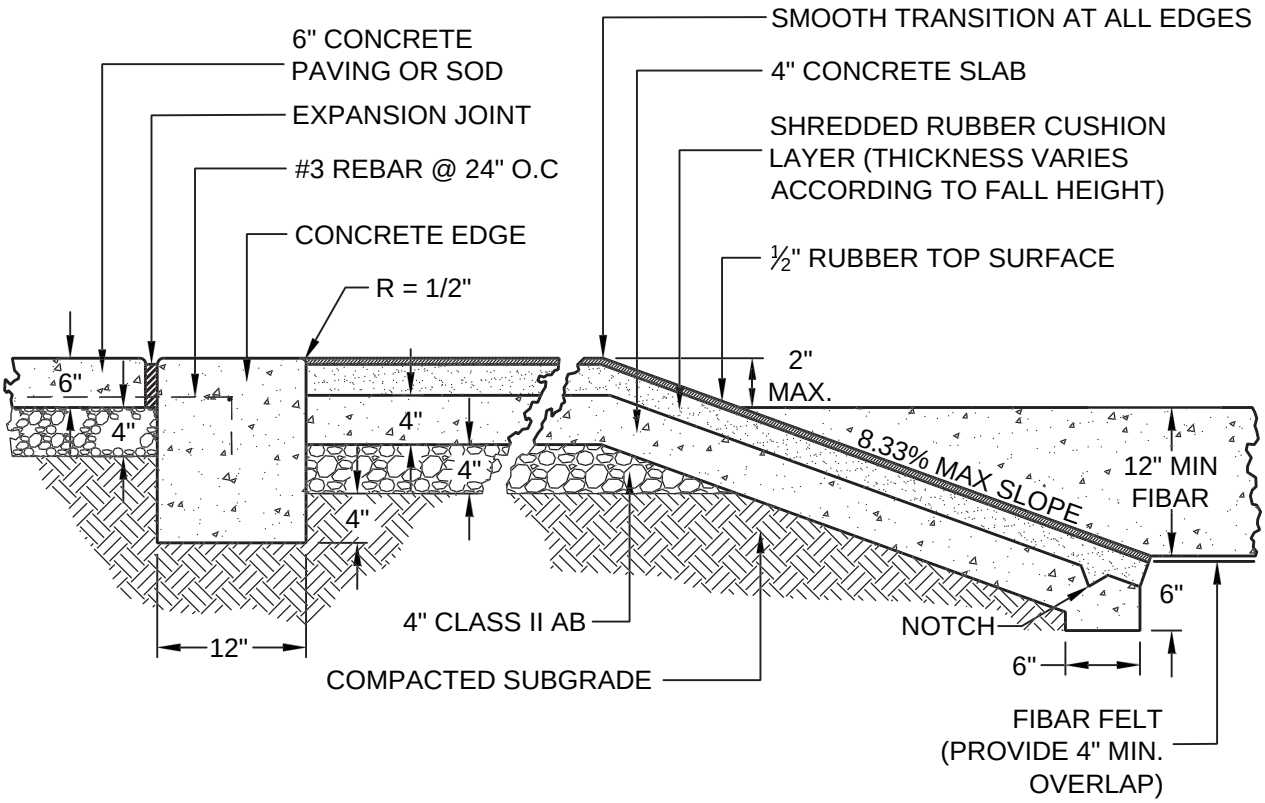

NOTE:

THIS STANDARD SHALL BE USED ON ALL PLAY AREAS AND PARK PLAYGROUND.

(Not To Scale)

REGISTERED PROFESSIONAL ENGINEER
BALWINDER S. GREWAL
C 49122
EXP. 9/30/14
STATE OF CALIFORNIA

PUBLIC WORKS DEPARTMENT

THE CITY OF BRENTWOOD

POURED IN PLACE SAFETY SURFACING

BALWINDER S. GREWAL CITY ENGINEER

DATE:	JULY 25, 2007	SHEET No.
REVISED:	DEC. 31, 2013	L-24

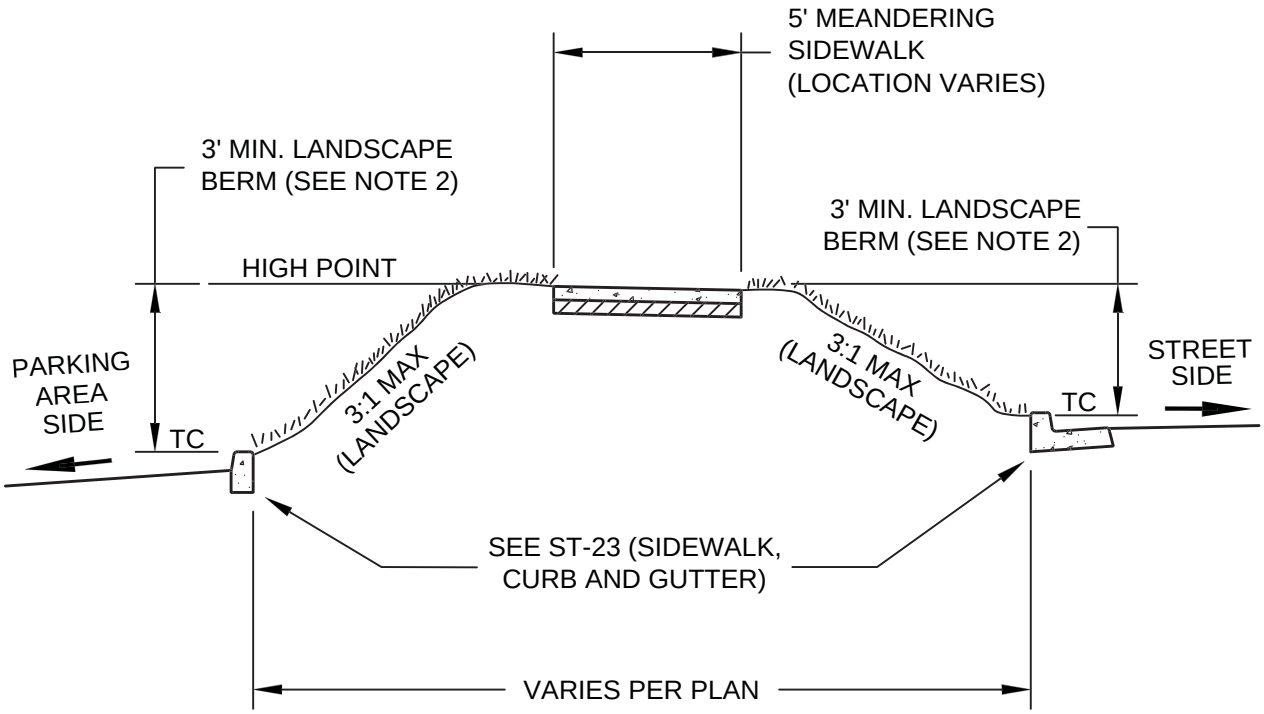

NOTES:

1. A LANDSCAPE BERM INSTALLATION SHALL BE REQUIRED BETWEEN THE STREET AND PARKING AREAS PER THIS STANDARD.

2. HEIGHT OF LANDSCAPE BERM SHALL BE 3' MINIMUM FROM THE TOP OF CURB (TC) TO THE HIGH POINT ON EITHER THE PARKING AREA SIDE OR STREET SIDE, WHICHEVER SIDE IS HIGHER IN ELEVATION.

(Not To Scale)

REGISTERED PROFESSIONAL ENGINEER
BALWINDER S. GREWAL
C 49122
EXP. 9/30/14
STATE OF CALIFORNIA

PUBLIC WORKS DEPARTMENT

THE CITY OF BRENTWOOD

LANDSCAPE BERM DETAIL

BALWINDER S. GREWAL CITY ENGINEER

DATE:	JUNE 8, 2007	SHEET No.
REVISED:	DEC. 31, 2013	L-25

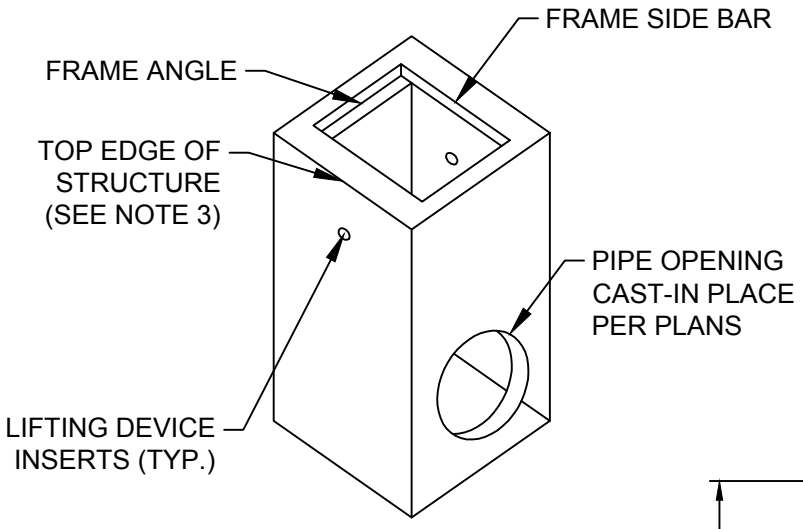

ISOMETRIC VIEW

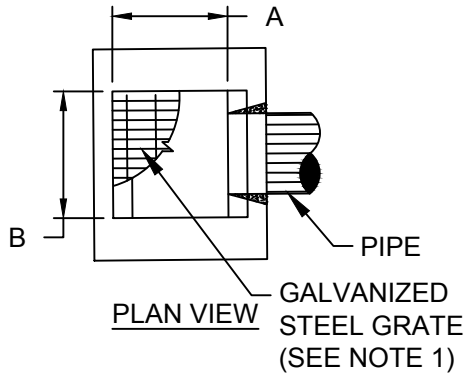

PLAN VIEW

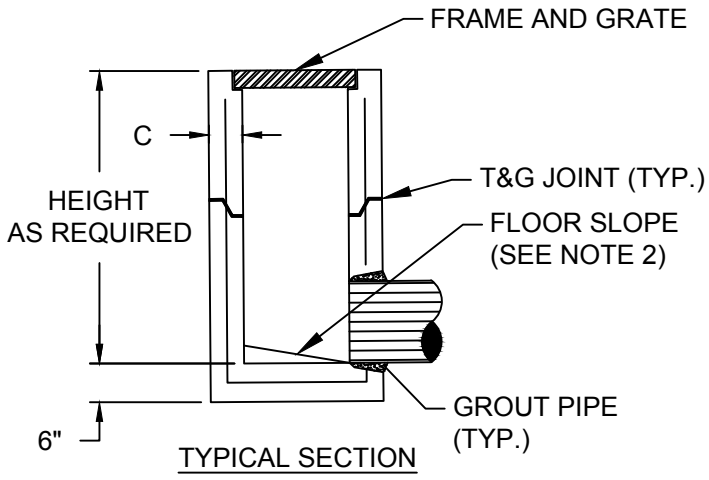

TYPICAL SECTION

NOTES:

1. FRAMES AND GRATES TO BE SPECIFIED FOR PEDESTRIAN OR TRAFFIC LOADING. ALL GRATES TO BE BICYCLE PROOF. GRATE LOCKING DEVICE, CLOSED-MESH GRATES, OR CAST IRON FRAME AND GRATES AVAILABLE PER APPROVAL FROM CITY ENGINEER (SEE L-26c).
2. FLOOR SLOPE TO BE DETERMINED IN THE FIELD BY CITY OF BRENTWOOD INSPECTOR.
3. TOP EDGE OF STRUCTURE TO BE STRAIGHT OR CHAMFERED PER APPROVAL OF THE CITY ENGINEER.
4. FOR ALL TURF AREAS THAT WOULD REQUIRE LARGER HEAVIER MAINTENANCE EQUIPMENT SUCH AS MOWERS, FERTILIZER AND HERBICIDE APPLICATIONS ETC.
5. SOURCE IS OLDCASTLE PRECAST INC. OR APPROVED EQUAL

FOR DROP INLET TABLE, SEE L-26b.

(Not To Scale)

PUBLIC WORKS DEPARTMENT

THE CITY OF BRENTWOOD

PEDESTRIAN TRAFFIC LOADING BICYCLE-PROOF DROP INLET DETAILS

Jagtar Dhaliwal

JAGTAR SINGH DHALIWAL, INTERIM CITY ENGINEER

DATE: FEB. 5, 2016

REVISED:

SHEET No. **L-26a**

DROP INLET TABLE
OLDCASTLE PRECAST INC. - MODEL REF: CP1212 OR APPROVED EQUAL

USCPG MODEL NO.	SANTA ROSA REF.	A	B	C
		INCH	INCH	INCH
CB1212	EK	12	12	4
CB1818	CK	18	18	5
CB1824	1K	18	24	5
CB2424	2K	24	24	6
CB2430	3K	24	30	5
CB3030	5K	30	30	6
CB2436	1L	24	36	6
CB3636	1M	36	36	6
CB2448	3L	24	48	6
CB3648	3M	36	48	6
CB4848	1R	48	48	6

FOR DROP INLET DETAILS, SEE L-26a.

(Not To Scale)

REGISTERED PROFESSIONAL ENGINEER
JAGTAR SINGH DHALIWAL
C 54919
EXP. 6/30/16
STATE OF CALIFORNIA

PUBLIC WORKS DEPARTMENT

THE CITY OF BRENTWOOD

PEDESTRIAN TRAFFIC LOADING BICYCLE-PROOF DROP INLET TABLE

Jagtar Dhaliwal
JAGTAR SINGH DHALIWAL, INTERIM CITY ENGINEER

DATE: FEB. 5, 2016
REVISED:

SHEET No.
L-26b

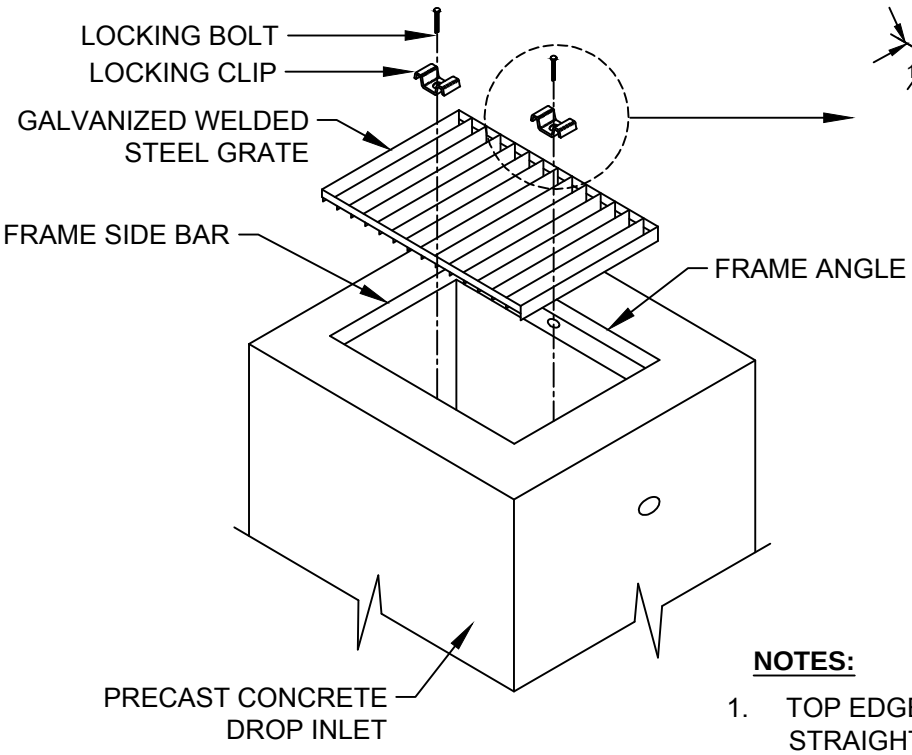

TYPICAL DROP INLET

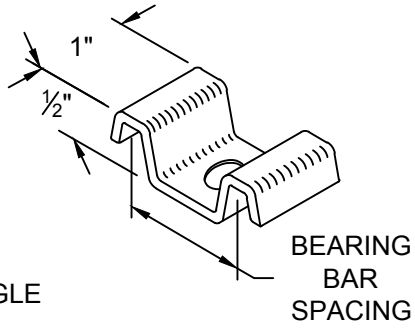

LOCKING CLIP

NOTES:

1. TOP EDGE OF STRUCTURE MAY BE STRAIGHT OR CHAMFERED FOR PRODUCTION PURPOSES.

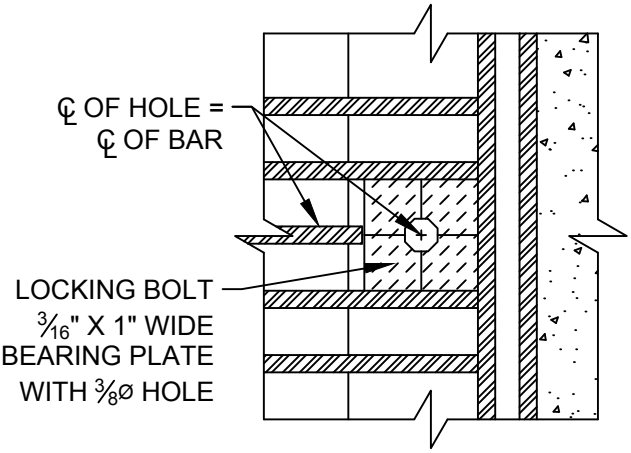

PARTIAL PLAN

(Not To Scale)

REGISTERED PROFESSIONAL ENGINEER
JAGTAR SINGH DHALIWAL
C 54919
EXP. 6/30/16
STATE OF CALIFORNIA

PUBLIC WORKS DEPARTMENT

THE CITY OF BRENTWOOD

PEDESTRIAN TRAFFIC LOADING BICYCLE-PROOF GRATE LOCKING DETAILS FOR INLETS

Jagtar Dhaliwal

JAGTAR SINGH DHALIWAL, INTERIM CITY ENGINEER

DATE: FEB. 5, 2016

REVISED:

SHEET No. L-26c

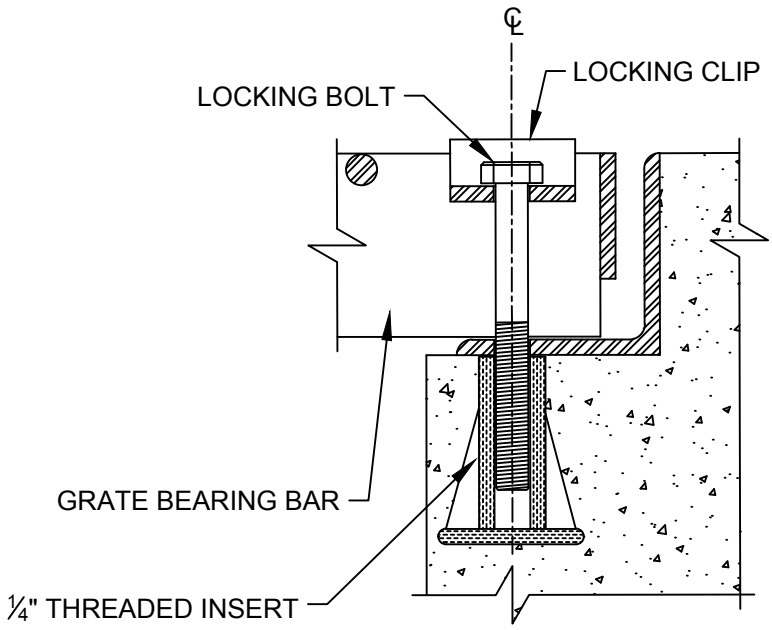

TYPICAL SECTION
AT LOCKING DEVICE

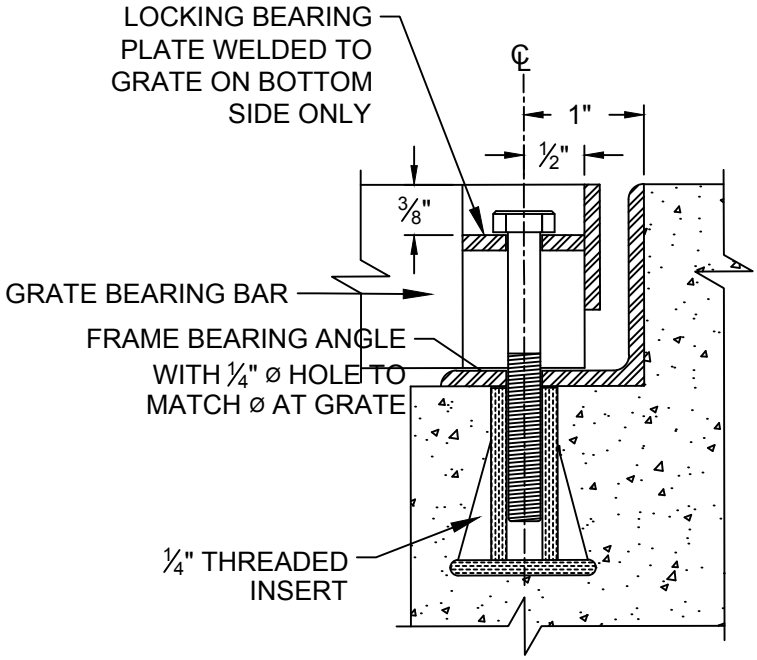

OPTIONAL SECTION
AT LOCKING DEVICE

(Not To Scale)

REGISTERED PROFESSIONAL ENGINEER
JAGTAR SINGH DHALIWAL
C 54919
EXP. 6/30/16
STATE OF CALIFORNIA

PUBLIC WORKS DEPARTMENT

THE CITY OF BRENTWOOD

PEDESTRIAN TRAFFIC LOADING BICYVLE-PROOF GRATE BOLT DETAIL

Jagtar Dhaliwal
JAGTAR SINGH DHALIWAL, INTERIM CITY ENGINEER

DATE: FEB. 5, 2016
REVISED:

SHEET No.
L-26d

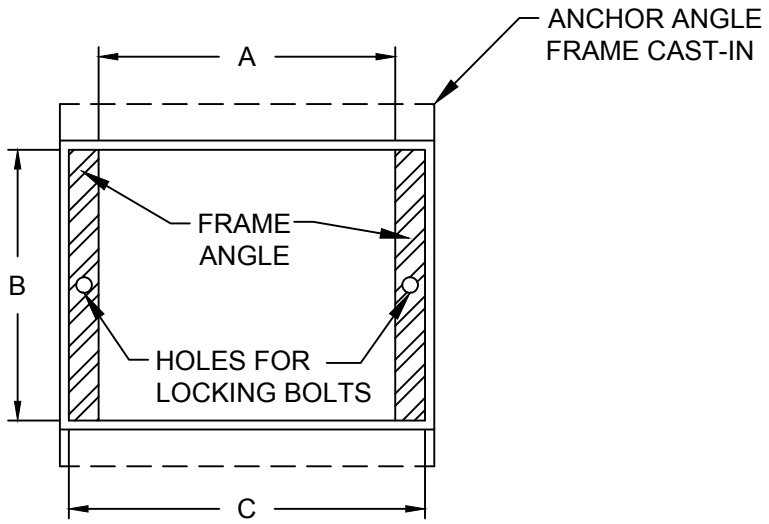

FRAME PLAN

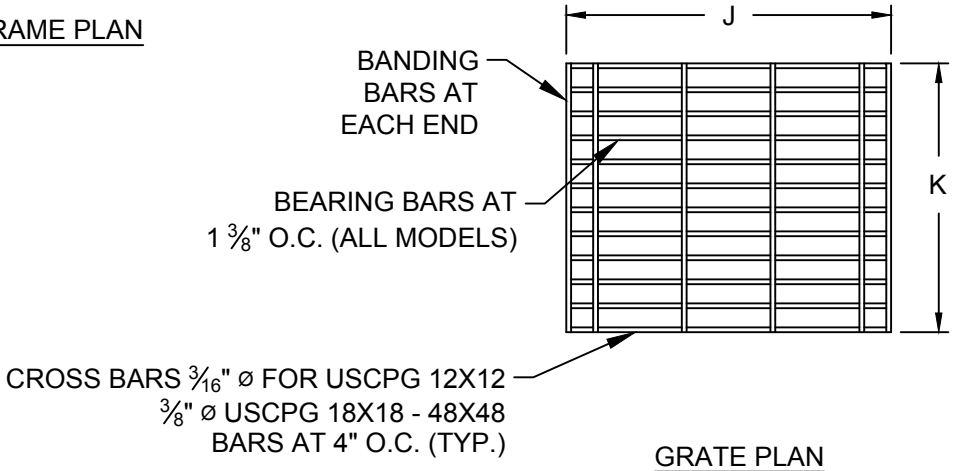

GRATE PLAN

NOTES:

1. FRAMES AND GRATES ARE HOT-DIPPED GALVANIZED AFTER FABRICATION PER ASTM SPEC A-123.
2. FOR GRATE LOCKING DEVICE DETAILS, SEE STANDARD L-26d.
3. FOR FRAME DETAILS TABLE, SEE STANDARD L-26f
4. FOR GRATE DETAILS TABLE, SEE STANDARD L-26g
5. FRAME AND GRATES ARE F&G TRAFFIC MODELS PER OLDCSTLE PRECAST INC. OR APPROVED EQUAL

(Not To Scale)

PUBLIC WORKS DEPARTMENT

THE CITY OF BRENTWOOD

PEDESTRIAN TRAFFIC LOADING BICYVLE-PROOF FRAME & GRATE DETAILS

Jagtar Dhaliwal

JAGTAR SINGH DHALIWAL, INTERIM CITY ENGINEER

DATE: FEB. 5, 2016

REVISED:

SHEET No.

L-26e

FRAME TABLE

USCPG MODEL NO.	SANTA ROSA REF.	A	B	C	BEARING ANGLE SEAT	SIDE ANGLE ANCHOR	WEIGHT
		IN	IN	IN	IN	IN	LBS
CB1212TF	EK	12 3/8	12 3/8	15	2 x 1 1/2 x 3/16	2 x 1 1/2 x 3/16	10
CB1818TF	CK	18 3/8	18 3/8	21 1/4	2 1/2 x 1 1/2 x 3/16	2 1/2 x 1 1/2 x 3/16	16
CB1824TF	1K	18 3/8	24 3/8	21	2 1/2 x 1 1/2 x 3/16	2 1/2 x 1 1/2 x 3/16	19
CB2424TF	2K	24 3/8	24 3/8	27	2 1/2 x 1 1/2 x 3/16	2 1/2 x 1 1/2 x 3/16	21
CB2430TF	3K	24 3/8	30 3/8	27	2 1/2 x 1 1/2 x 3/16	2 1/2 x 1 1/2 x 3/16	24
CB2436TF	1L	24 3/8	36 3/8	27	2 1/2 x 1 1/2 x 3/16	2 1/2 x 1 1/2 x 3/16	26
CB2448TF	3L	24 3/8	48 3/8	27	2 1/2 x 1 1/2 x 3/16	2 1/2 x 1 1/2 x 3/16	31
CB3030TF	5K	30 3/8	30 3/4	34 3/8	3 1/4 x 2 1/4 x 1/4	3 x 2 x 1/4	43
CB3636TF	1M	36 3/8	36 3/8	40 1/2	3 3/4 x 2 1/2 x 1/4	3 1/2 x 2 1/2 x 1/4	62
CB3648TF	3M	36 3/8	48 3/8	40 1/2	3 3/4 x 2 1/2 x 1/4	3 1/2 x 2 1/2 x 1/4	84
CB4848TF	1R	48 3/8	48 3/8	52 1/2	C4 x 5.4 w/FB 2 1/2 x 1/4	4 x 3 x 1/4	93

FOR FRAME DETAILS, SEE L-26e.

(Not To Scale)

REGISTERED PROFESSIONAL ENGINEER
JAGTAR SINGH DHALIWAL
C 54919
EXP. 6/30/16
STATE OF CALIFORNIA

PUBLIC WORKS DEPARTMENT

THE CITY OF BRENTWOOD

PEDESTRIAN TRAFFIC LOADING BICYVLE-PROOF FRAME TABLE

Jagtar Dhaliwal

JAGTAR SINGH DHALIWAL, INTERIM CITY ENGINEER

DATE: FEB. 5, 2016

REVISED:

SHEET No. L-26f

GRATES TABLE

USCPG MODEL NO.	SANTA ROSA REF.	J	K	BEARING BARS	BANDING BARS	WEIGHT
		IN	IN	IN	IN	LBS
CB1212TG	EK	14 3/4	12	1 3/4 x 3/16	1 1/2 x 3/16	15
CB1818TG	CK	20 5/8	18	2 1/4 x 3/16	2 x 3/16	28
CB1824TG	1K	20 5/8	24	2 1/4 x 3/16	2 x 3/16	28
CB2424TG	2K	26 5/8	24	2 1/4 x 3/16	2 x 3/16	72
CB2430TG	3K	26 1/2	30	2 1/4 x 3/16	2 x 3/16	98
CB2436TG	1L	26 1/2	36	2 1/4 x 3/16	2 x 3/16	137
CB2448TG	3L	26 1/2	48	2 1/4 x 3/16	2 x 3/16	144
CB3030TG	5K	34 1/16	30 1/16	3 x 1/4	2 1/2 x 1/4	139
CB3636TG	1M	40	36 1/4	3 1/2 x 1/4	2 1/2 x 1/4	219
CB3648TG (2 PC)	3M	40	23 5/8	3 1/2 x 1/4	2 1/2 x 1/4	282
CB4848TG (2 PC)	1R	52	23 15/16	4 x 5/16	3 x 1/4	248

FOR GRATE DETAILS, SEE L-26e.

(Not To Scale)

REGISTERED PROFESSIONAL ENGINEER
JAGTAR SINGH DHALIWAL
C 54919
EXP. 6/30/16
STATE OF CALIFORNIA

PUBLIC WORKS DEPARTMENT

THE CITY OF BRENTWOOD

PEDESTRIAN TRAFFIC LOADING BICYCLE-PROOF GRATE TABLE

Jagtar Dhaliwal

JAGTAR SINGH DHALIWAL, INTERIM CITY ENGINEER

DATE: FEB. 5, 2016

REVISED:

SHEET No. L-26g

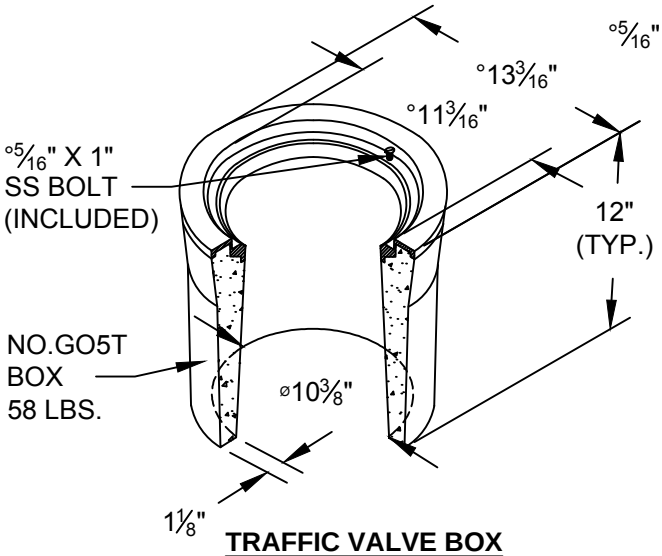

TRAFFIC VALVE BOX

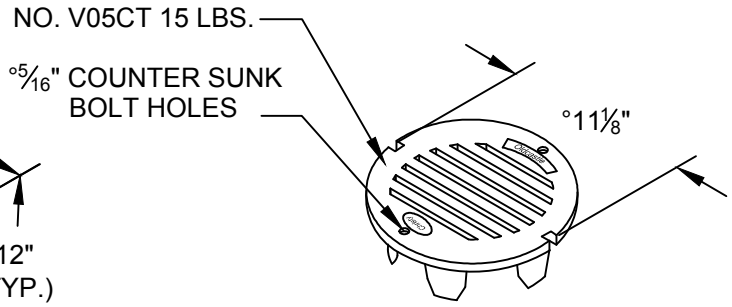

TRAFFIC BOLT DOWN GRATE

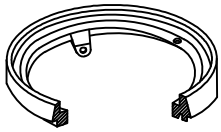

LOCKING GRADE RING

OLDCASTLE ODERING CODE	ITEM	APPROXIMATE SHIPPING WEIGHT	DESCRIPTION
G05TBOX	BOX	58 LBS.	DG05T TRAFFIC VALVE BOX (10 3/8" I.D. X 12" HIGH) - 36 PER PALLET - (INCLUDES 1/4" -20 X 1", BOLTS)
V05-71CT	LID	15 LBS.	CAST IRON GRATE (INCLUDES HOLES FOR BOLT DOWN FEATURE) ADA COMPLIANT
G05X12	EXTENSION	38 LBS.	12" REINFORCED CONCRETE FOR G05 & G08 BOXES - 36 PER PALLET
G05TGR10	GRADE RING	10 LBS.	1" HIGH CAST IRON
G05TGR15	GRADE RING	14 LBS.	1 1/2" HIGH CAST IRON
G05TGR20	GRADE RING	18 LBS.	2" HIGH CAST IRON

NOTES:

1. FOR ALL TRUF AREAS THAT ARE DESIGNED FOR PLAY AND RECREATION PURPOSES
2. SOURCE IS OLDCASTLE OR APPROVED EQUAL

(Not To Scale)

PUBLIC WORKS DEPARTMENT

THE CITY OF BRENTWOOD

DRAIN BOX 10-3/8" I.D. X 12"

Jagtar Dhaliwal

JAGTAR SINGH DHALIWAL, INTERIM CITY ENGINEER

DATE: FEB. 5, 2016

REVISED:

SHEET No.

L-27

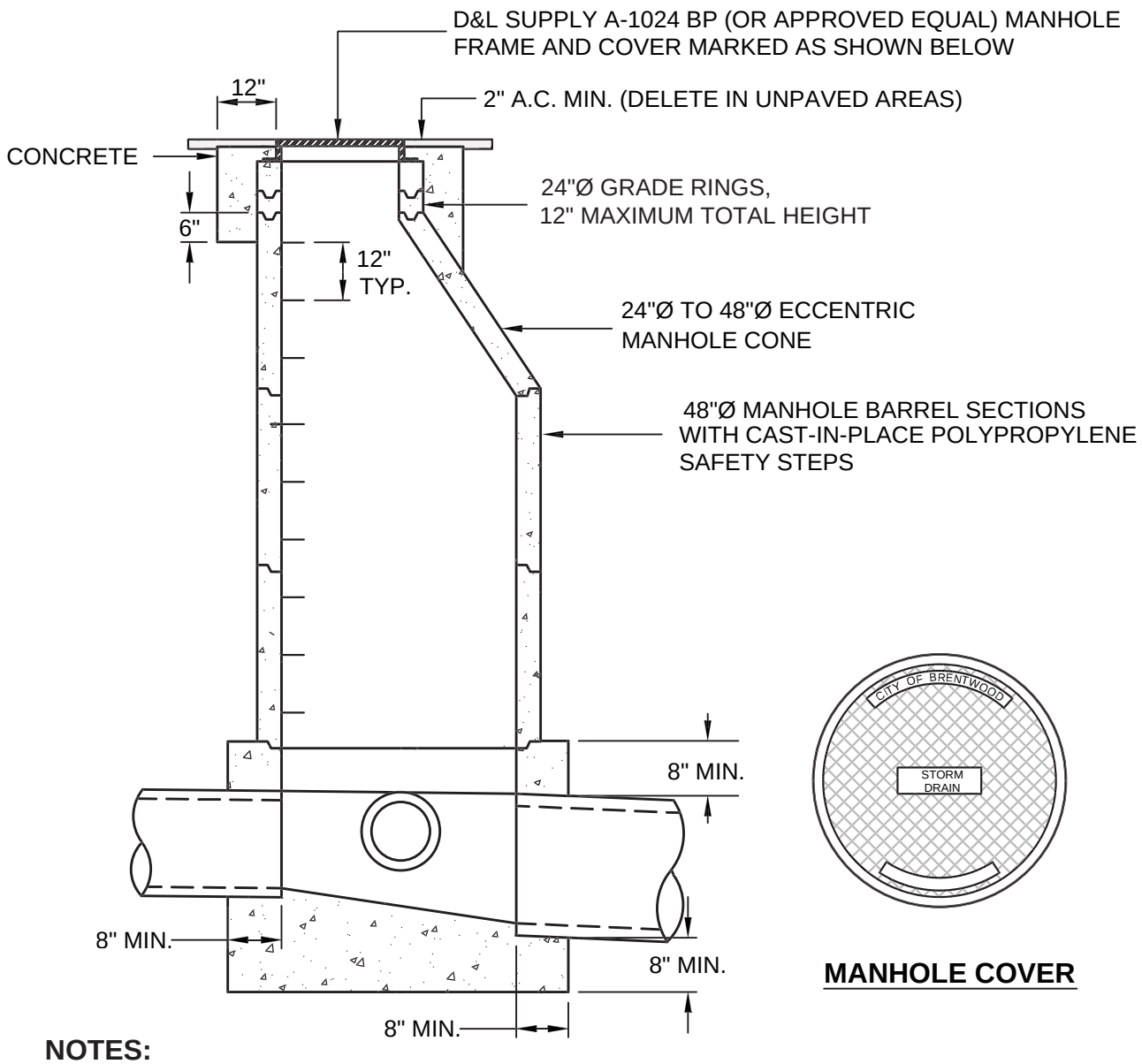

MANHOLE COVER

NOTES:

1. FOR PIPES UP TO 36" IN DIAMETER.
2. FOR STORM DRAIN LINE 20' OR DEEPER, USE STANDARD PLAN SD-2.
3. FORM BASE TO PROVIDE A SMOOTH FLOW CHANNEL.
4. 1:3 GROUT MIX OR 3" RAM-NEK JOINT COMPOUND (OR APPROVED EQUAL) IN ALL JOINTS INSIDE AND OUT.
5. ALL CONCRETE TO BE CLASS A, 3000 P.S.I. MIN.
6. MANHOLE BASE SHALL EXTEND 18" OUTSIDE BARREL WHEN CONSTRUCTED IN SAND.

(Not To Scale)

REGISTERED PROFESSIONAL ENGINEER
BALWINDER S. GREWAL
C 49122
EXP. 9/30/14
STATE OF CALIFORNIA

PUBLIC WORKS DEPARTMENT

THE CITY OF BRENTWOOD

SMALL DIAMETER STORM DRAIN MANHOLE

BALWINDER S. GREWAL CITY ENGINEER

DATE:	JUNE 20, 2003	SHEET No.
REVISED:	DEC. 31, 2013	SD-1

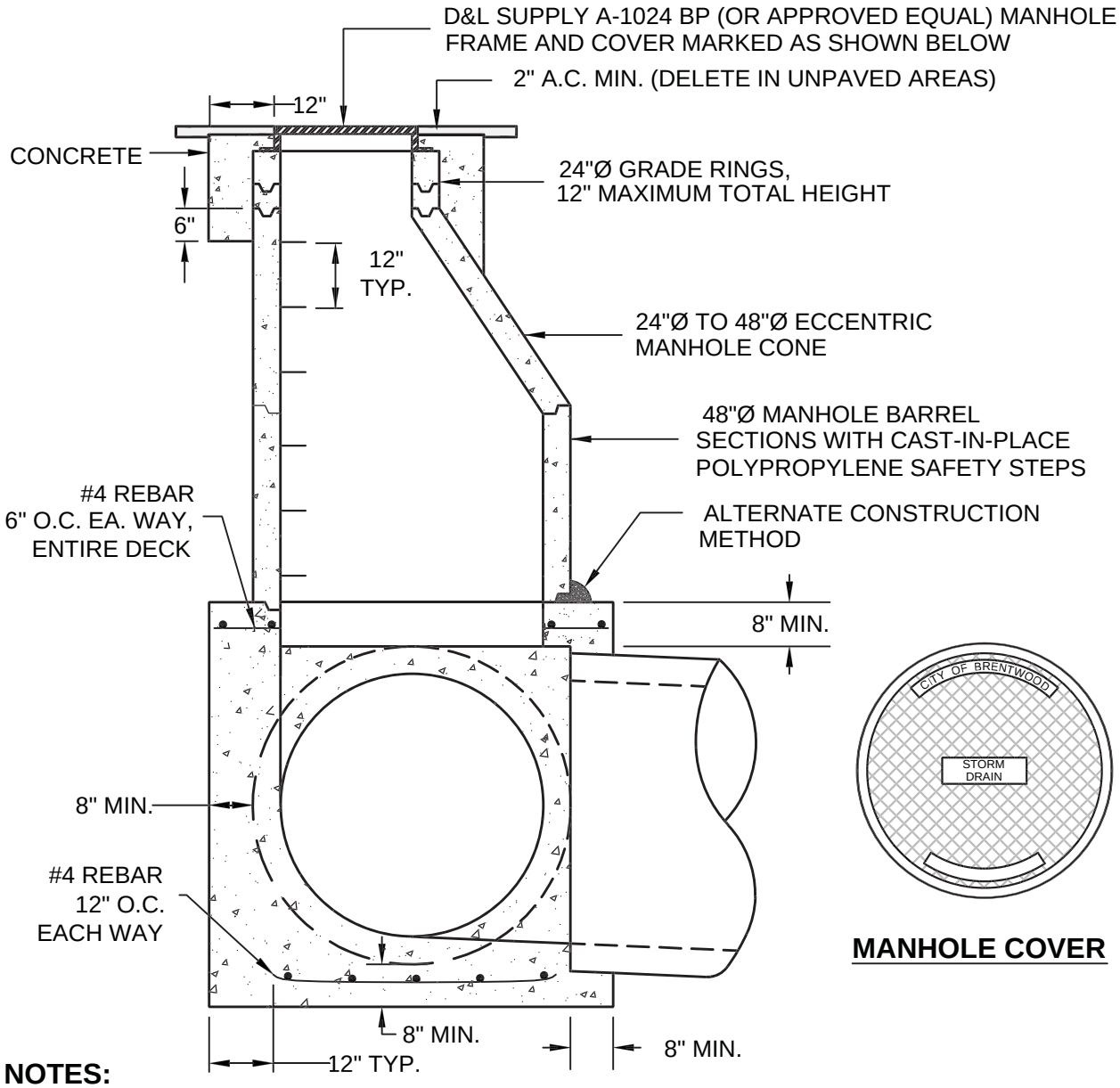

NOTES:

1. FOR PIPES 42" DIAMETER OR LARGER AND WHERE STORM DRAIN LINE IS 20' OR DEEPER.
2. FORM BASE TO PROVIDE A SMOOTH FLOW CHANNEL.
3. 1:3 GROUT MIX OR 3" RAM-NEK JOINT COMPOUND (OR APPROVED EQUAL) IN ALL JOINTS INSIDE AND OUT.
4. ALL CONCRETE TO BE CLASS A, 3000 P.S.I. MIN.
5. MANHOLE BASE SHALL EXTEND 18" OUTSIDE BARREL WHEN CONSTRUCTED IN SAND.

(Not To Scale)

REGISTERED PROFESSIONAL ENGINEER
BALWINDER S. GREWAL
C 49122
EXP. 9/30/14
STATE OF CALIFORNIA

PUBLIC WORKS DEPARTMENT

THE CITY OF BRENTWOOD

LARGE DIAMETER STORM DRAIN MANHOLE

BALWINDER S. GREWAL CITY ENGINEER

DATE:	JUNE 20, 2003	SHEET No.
REVISED:	DEC. 31, 2013	SD-2

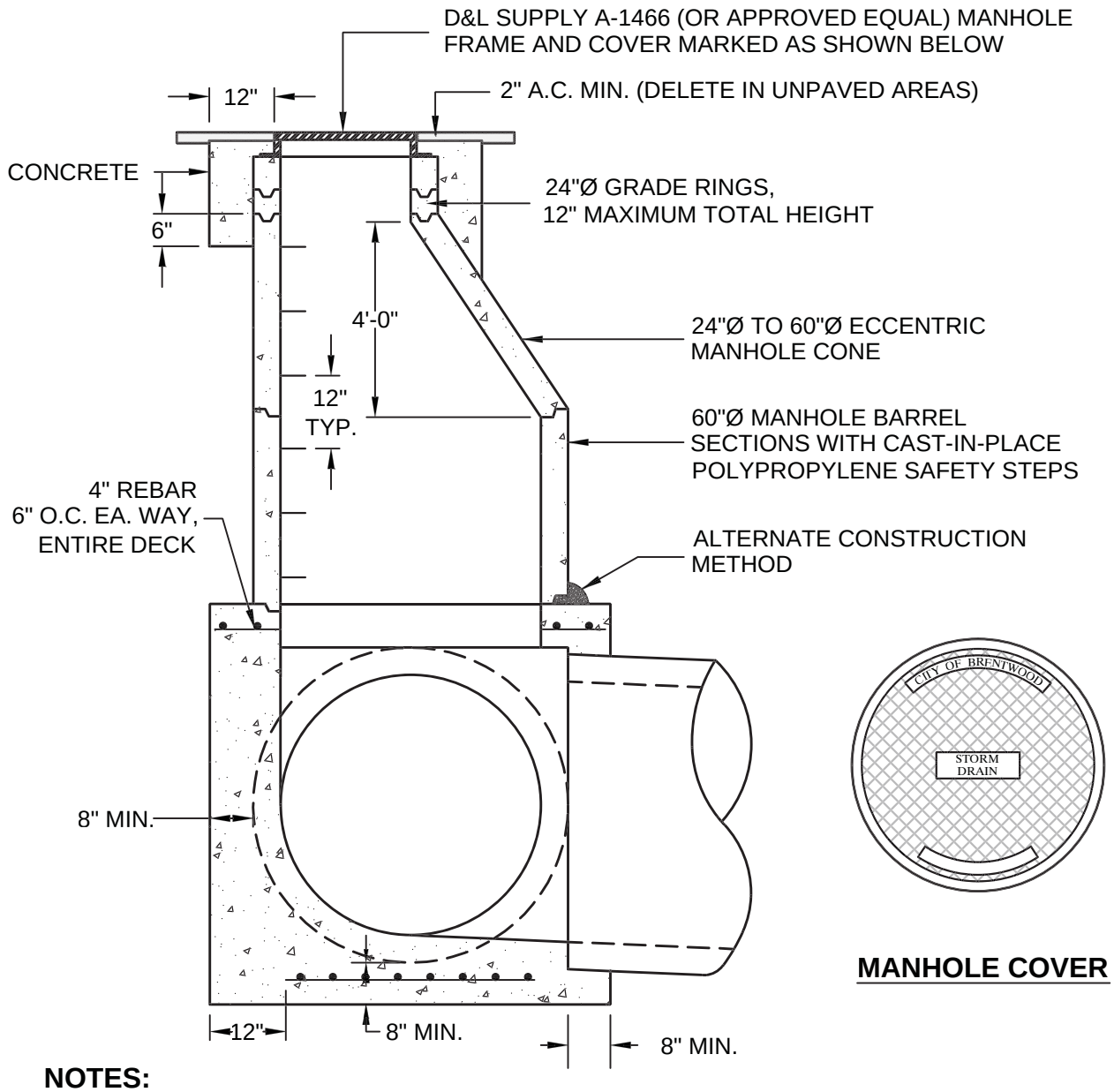

MANHOLE COVER

NOTES:

1. FOR PIPES 60" DIAMETER OR LARGER.
2. FORM BASE TO PROVIDE A SMOOTH FLOW CHANNEL.
3. 1:3 GROUT MIX OR 3" MIN. RAM-NEK JOINT COMPOUND (OR APPROVED EQUAL) IN ALL JOINTS INSIDE AND OUT.
4. ALL CONCRETE TO BE CLASS A, 3000 P.S.I. MIN.
5. MANHOLE BASE SHALL EXCHANGE 18" OUTSIDE BARREL WHEN CONSTRUCTED IN SAND.

(Not To Scale)

REGISTERED PROFESSIONAL ENGINEER
BALWINDER S. GREWAL
C 49122
EXP. 9/30/14
STATE OF CALIFORNIA

PUBLIC WORKS DEPARTMENT

THE CITY OF BRENTWOOD

EXTRA LARGE DIAMETER STORM DRAIN MANHOLE

BALWINDER S. GREWAL CITY ENGINEER

DATE:	JUNE 20, 2003	SHEET No.
REVISED:	DEC. 31, 2013	SD-3

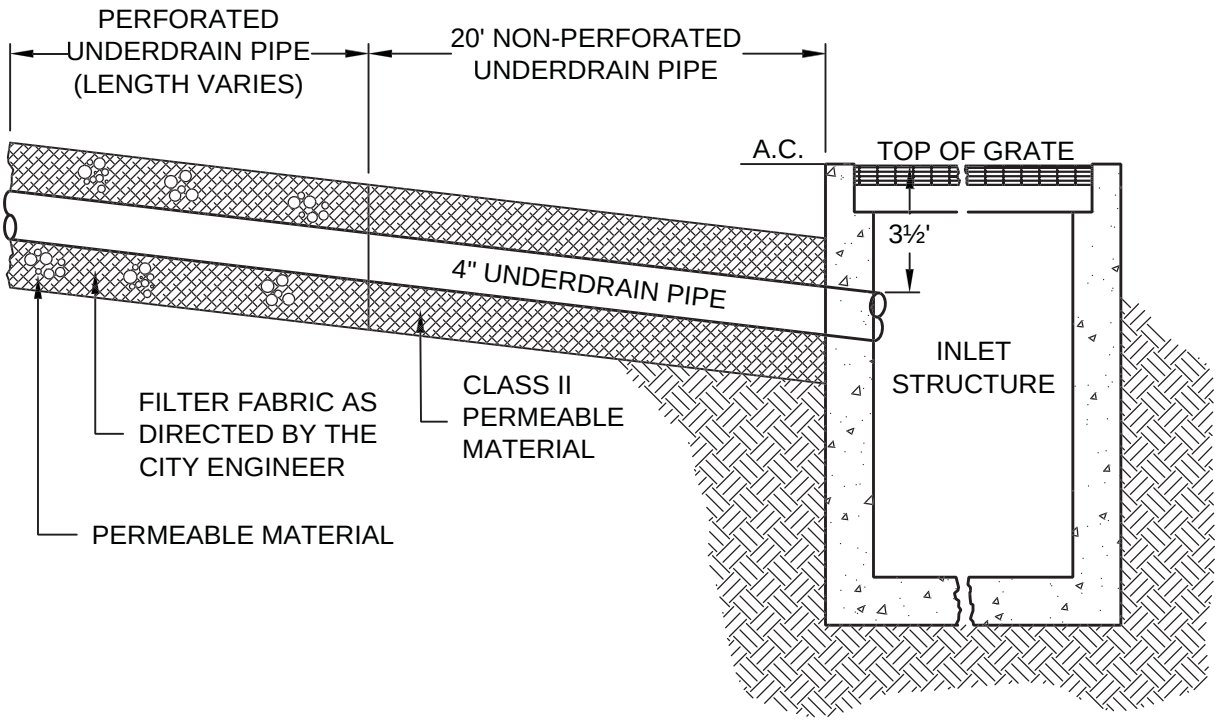

NOTES:

1. UNDERDRAIN PIPE, PERMEABLE MATERIAL AND FILTER FABRIC SHALL CONFORM TO THE STATE STANDARD SPECIFICATIONS, SECTION 68, "SUBSURFACE DRAINS."
2. PIPE MATERIAL SHALL BE AS SPECIFIED ON THE CONTRACT PLANS.
3. FILTER FABRIC ENVELOPMENT AND LENGTH SHALL BE AS SHOWN ON THE CONTRACT PLANS.
4. SEE ST-24 FOR ADDITION DETAILS ON THE SUBDRAIN.

(Not To Scale)

REGISTERED PROFESSIONAL ENGINEER
BALWINDER S. GREWAL
C 49122
EXP. 9/30/14
STATE OF CALIFORNIA

PUBLIC WORKS DEPARTMENT

THE CITY OF BRENTWOOD

SUBSURFACE DRAIN AT INLET STRUCTURE

BALWINDER S. GREWAL CITY ENGINEER

DATE: MAR. 12, 2001

REVISED: DEC. 31, 2013

SHEET No.
SD-4

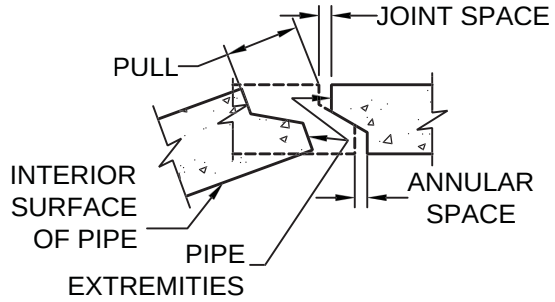

REINFORCED CONCRETE PIPE JOINT DETAIL

(SEE NOTE 3 ON SD-5b)

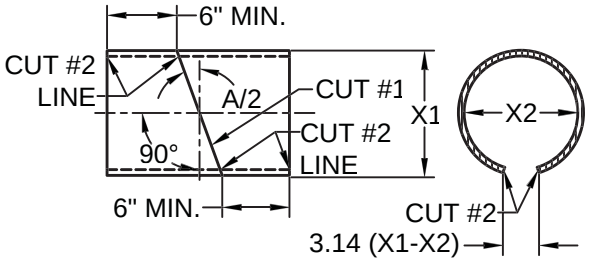

INTERIOR FORM DETAIL

(SEE NOTE 4 ON SD-5b)

CUT #1: SAW THE TUBE AT AN ANGLE OF A/2 WITH THE TRAVERSE PLANE. REVERSE ONE SECTION AND TAPE BOTH SECTIONS TOGETHER FORMING THE DEFLECTION ANGLE, A.

CUT #2: SAW THE TUBE LONGITUDINALLY, REMOVING A STRIP 3.14 (X1-X2) INCHES WIDE ON THE SIDE OPPOSITE THE OPEN JOINT. BEND THE ENDS OF THE CUT TOGETHER AND INSERT THE TUBE IN THE PIPE.

CIRCULAR TIES

PIPEØ	SPACE BETWEEN PIPE EXTREMITIES	CIRCULAR TIES
21" OR LESS	2½"	3
24" TO 30"	2½" OR LESS	3
33" TO 57"	2½" OR LESS	4
60" TO 66"	2½" OR LESS	5

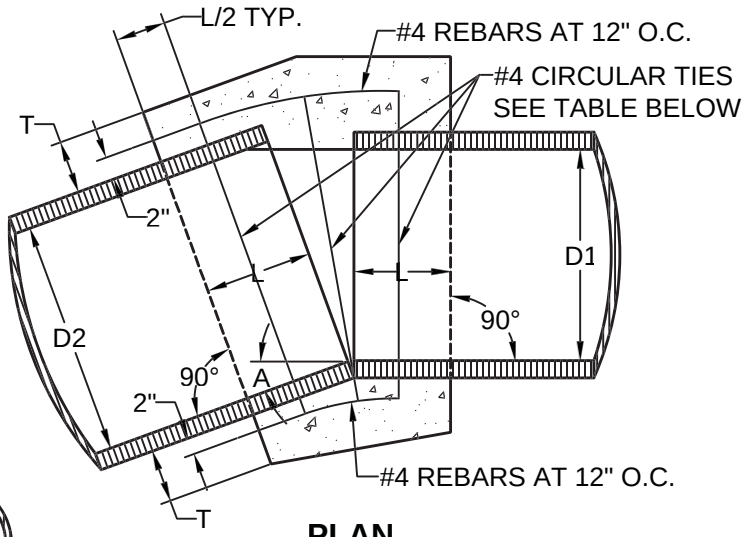

PLAN

TABLE

D2	L	T	PERMITTED DEFLECTION (A)
12"	12"	4"	2°14'
15"	12"	4"	1°55'
18"	12"	5"	1°40'
21"	12"	5"	1°29'
24"	12"	6"	1°20'
27"	12"	7"	1°13'
30"	12"	7"	1°07'
33"	18"	8"	1°01'
36"	18"	9"	1°01'
39"	18"	9"	1°09'
42"	18"	9"	1°05'
45"	18"	10"	1°01'
48"	18"	10"	0°58'
51"	18"	10"	0°55'
54"	18"	10"	0°52'
57"	18"	10"	0°49'
60"	21"	11"	0°45'
66"	21"	11"	0°43'

D2 = LARGER PIPE

(Not To Scale)

PUBLIC WORKS DEPARTMENT

THE CITY OF BRENTWOOD

REINFORCED CONCRETE COLLAR

BALWINDER S. GREWAL CITY ENGINEER

DATE: FEB. 13, 2001

REVISED: DEC. 31, 2013

SHEET No. **SD-5a**

NOTES:

1. A CONCRETE COLLAR IS REQUIRED WHENEVER D2 IS UNEQUAL TO D1 OR THE PERMITTED DEFLECTION AT A PIPE JOINT IS EXCEEDED (I.E., WHEN ANGLE "A" IS GREATER THAN THE PERMITTED DEFLECTION ANGLE, SEE TABLE IN SD-5a).

2. CONCRETE COLLARS SHALL NOT BE CONSTRUCTED ON MAIN STORM DRAINS UNLESS DIRECTED AND APPROVED BY THE CITY ENGINEER.

3. REINFORCING SHALL BE USED WHERE THE PIPE DIAMETER IS GREATER THAN 21" AND ON ALL PIPES WHERE THE PULL BETWEEN THE EXTREMITIES (SEE REINFORCED CONCRETE PIPE JOINT DETAIL) IS 2½" OR LARGER.

4. FOR PIPES 21" OR LESS IN DIAMETER, AN INTERIOR FORM OF UNSEALED SONO-TUBE OR APPROVED EQUAL (SEE INTERIOR FORM DETAIL) SHALL BE USED TO PROVIDE A SMOOTH INTERIOR JOINT. THE PAPER FORM MAY BE LEFT IN PLACE. WHEN THE PIPE IS 24" OR LARGER, A REMOVABLE INTERIOR FORM SHALL BE USED OR THE INTERIOR JOINT SHALL BE COMPLETELY FILLED WITH MORTAR AND NEATLY POINTED.

5. A CONCRETE COLLAR SHALL NOT BE CONSTRUCTED CONNECTING A LARGER DIAMETER PIPE UPSTREAM TO A SMALLER DIAMETER PIPE DOWNSTREAM UNLESS DIRECTED AND APPROVED BY THE CITY ENGINEER.

6. WHERE THE SLOPE OF THE UPSTREAM PIPE IS GREATER THAN THE SLOPE OF THE DOWNSTREAM PIPE, JOIN SOFFITS; WHERE THE SLOPE OF THE UPSTREAM PIPE IS LESS THAN THE SLOPE OF THE DOWNSTREAM PIPE, JOIN INVERTS.

7. FOR PIPE SIZES NOT LISTED IN THE TABLE, USE VALUES OF L, T, AND A FOR THE NEXT LARGER SIZE.

8. WHEN THE SPACE BETWEEN THE PIPE EXTREMITIES EXCEEDS 2½", THE NUMBER OF CIRCULAR TIES SHALL BE INCREASED TO MAINTAIN A MAXIMUM SPACING OF 6" CENTER TO CENTER. CIRCULAR TIES SHALL HAVE A DIAMETER OF 5" GREATER THAN THE OUTSIDE DIAMETER OF THE LARGER PIPE.

(Not To Scale)

REGISTERED PROFESSIONAL ENGINEER
BALWINDER S. GREWAL
C 49122
EXP. 9/30/14
STATE OF CALIFORNIA

PUBLIC WORKS DEPARTMENT

THE CITY OF BRENTWOOD

REINFORCED CONCRETE COLLAR NOTES

BALWINDER S. GREWAL CITY ENGINEER

DATE: FEB. 13, 2001

REVISED: DEC. 31, 2013

SHEET No. **SD-5b**

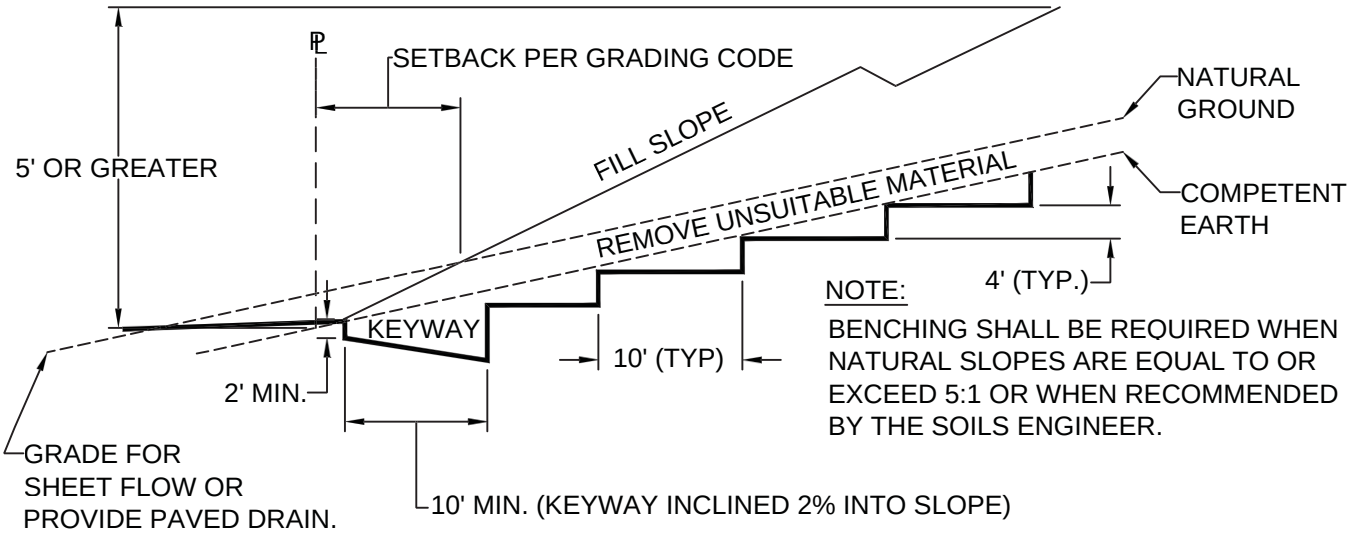

NOTE:
BENCHING SHALL BE REQUIRED WHEN NATURAL SLOPES ARE EQUAL TO OR EXCEED 5:1 OR WHEN RECOMMENDED BY THE SOILS ENGINEER.

ALTERNATE 1

BENCHED FILL OVER NATURAL

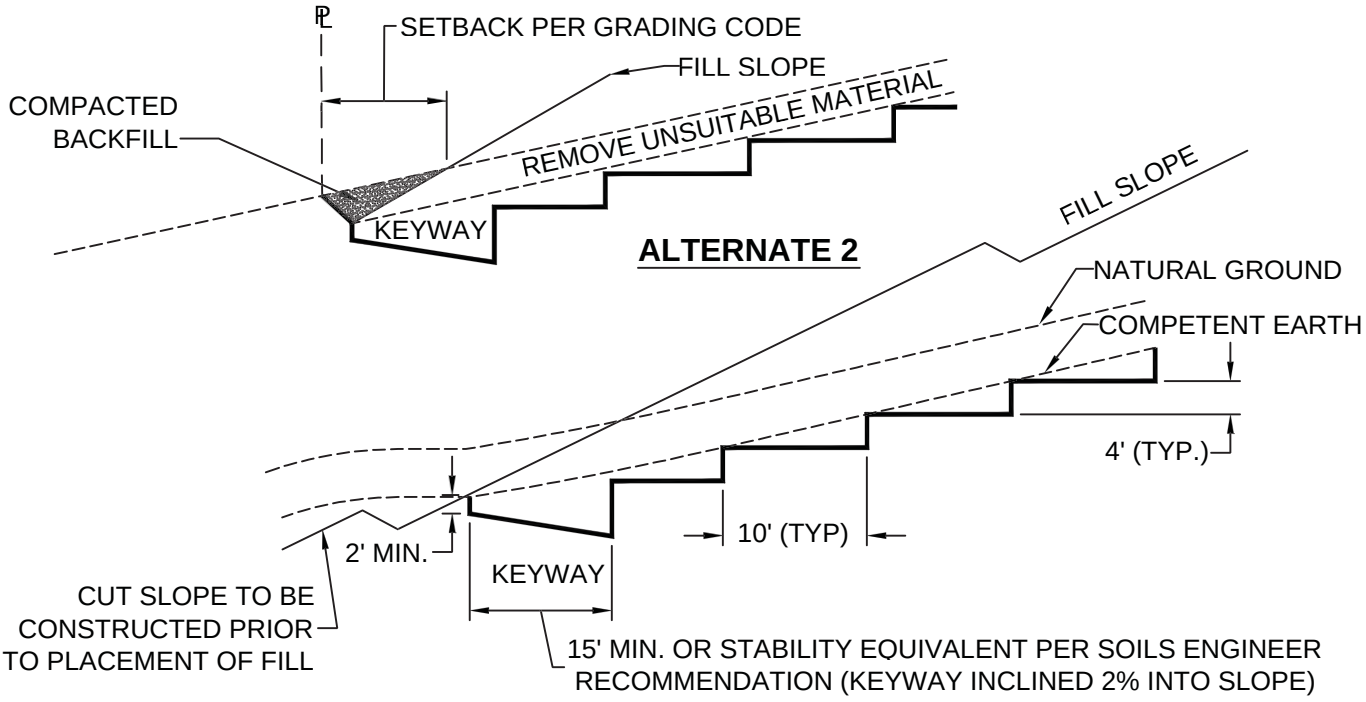

BENCHED FILL OVER CUT

(Not To Scale)

REGISTERED PROFESSIONAL ENGINEER
BALWINDER S. GREWAL
C 49122
EXP. 9/30/14
STATE OF CALIFORNIA

PUBLIC WORKS DEPARTMENT

THE CITY OF BRENTWOOD

BENCHING FOR COMPACTED FILL

BALWINDER S. GREWAL CITY ENGINEER

DATE: MAR. 9, 2001
REVISED: DEC. 31, 2013

SHEET No.
SD-6

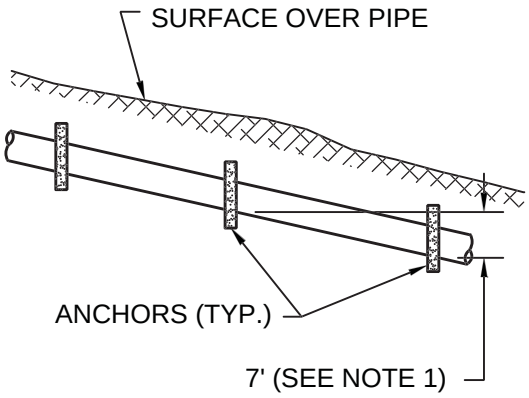

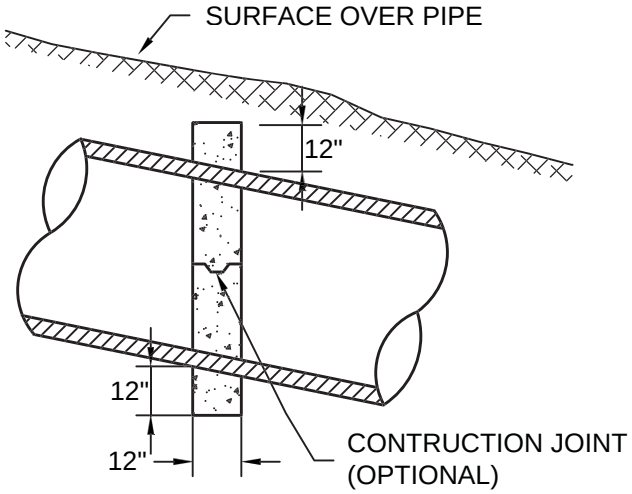

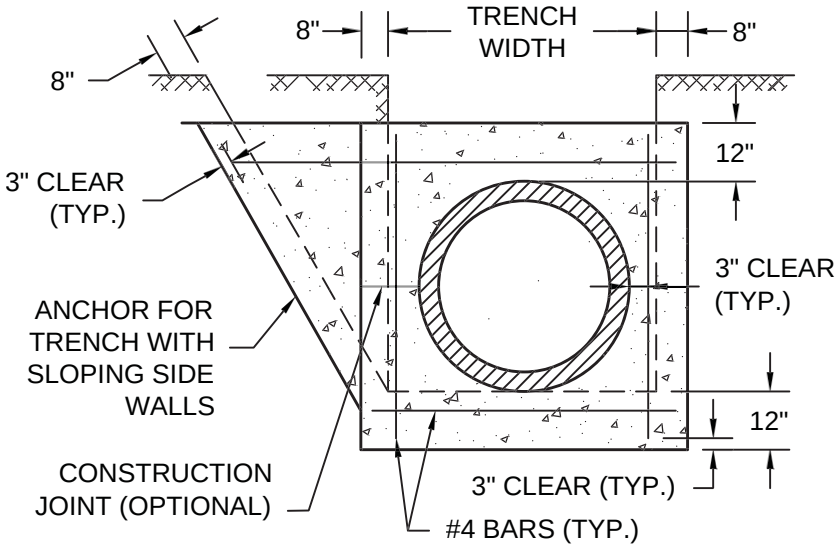

NOTES:

1. PIPE ANCHORS SHALL BE CONSTRUCTED AT 7' VERTICAL INTERVAL ON ALL SLOPES OF 5:1 OR STEEPER.
2. ALL REINFORCING STEEL SHALL BE #4 BARS.

(Not To Scale)

REGISTERED PROFESSIONAL ENGINEER
BALWINDER S. GREWAL
C 49122
EXP. 9/30/14
STATE OF CALIFORNIA

PUBLIC WORKS DEPARTMENT

THE CITY OF BRENTWOOD

CONCRETE PIPE SLOPE ANCHOR

BALWINDER S. GREWAL CITY ENGINEER

DATE:	MAR. 9, 2001	SHEET No.
REVISED:	DEC. 31, 2013	SD-7

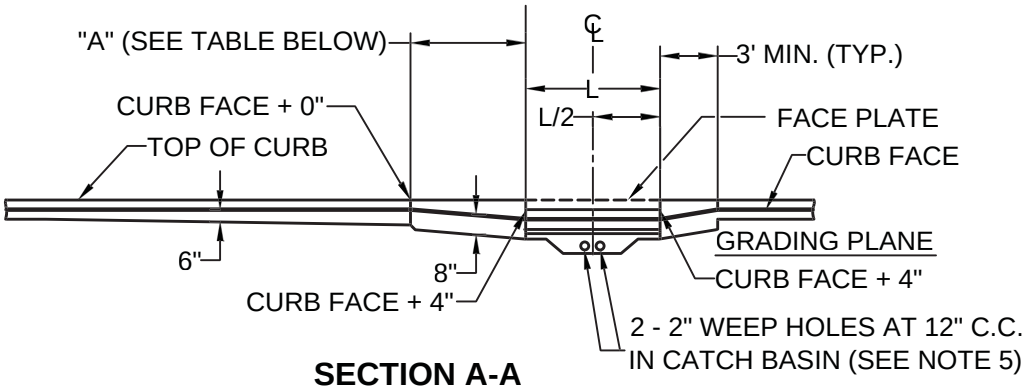

SECTION A-A

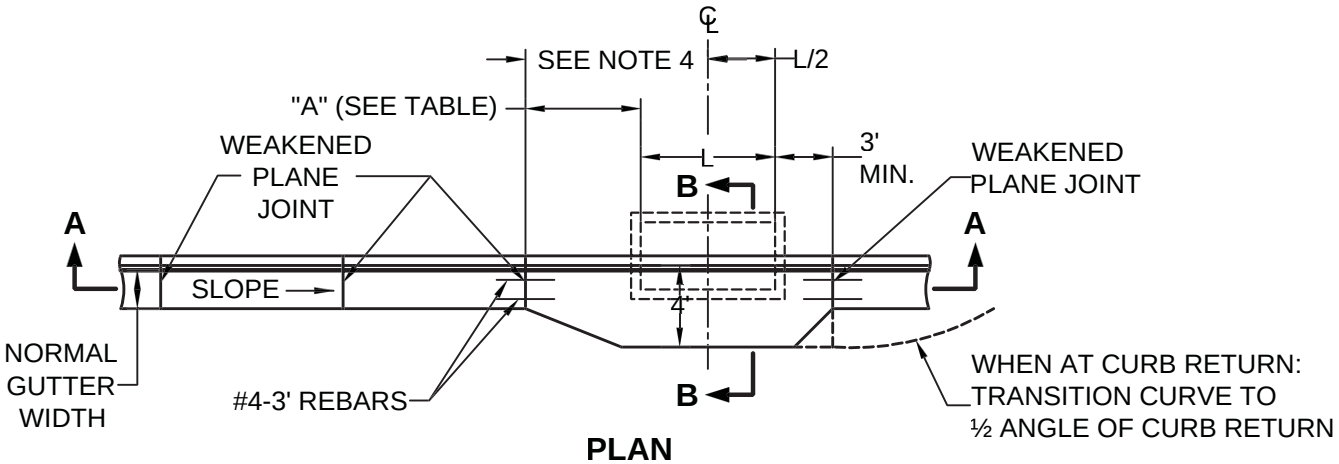

PLAN

NOTES:

1. LOCAL DEPRESSION SHALL NOT BE CONSTRUCTED UNTIL CONNECTING CURB AND GUTTER IS COMPLETE OR SHALL BE CONSTRUCTED MONOLITHICALLY WITH CONNECTING CURB AND GUTTER, UNLESS OTHERWISE APPROVED BY THE CITY ENGINEER.
2. LOCAL DEPRESSION SHALL CONFORM TO SAME SHAPE WHETHER GRATE INLET OR CURB OPENING, OR BOTH, ARE USED.
3. LENGTH OF OPENING "L" SHALL BE SPECIFIED ON PLANS.
4. BOTH ENDS OF DEPRESSION SHALL BE SYMMETRICAL ABOUT CENTER LINE IN SUMP CONDITIONS.
5. FILL BETWEEN THE GRADING PLANE AND CONCRETE DEPRESSION SHALL BE BASE MATERIAL.

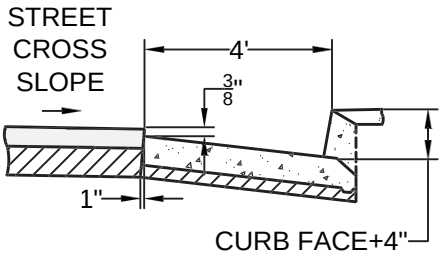

SECTION B-B

UPSTREAM CURBGRADE	"A"
<3%	6'
3% - 6%	8'
>6%	10'

(Not To Scale)

REGISTERED PROFESSIONAL ENGINEER
BALWINDER S. GREWAL
C 49122
EXP. 9/30/14
STATE OF CALIFORNIA

PUBLIC WORKS DEPARTMENT

THE CITY OF BRENTWOOD

LOCAL DEPRESSION

BALWINDER S. GREWAL CITY ENGINEER

DATE: MAR. 23, 2001

REVISED: DEC. 31, 2013

SHEET No.

SD-8

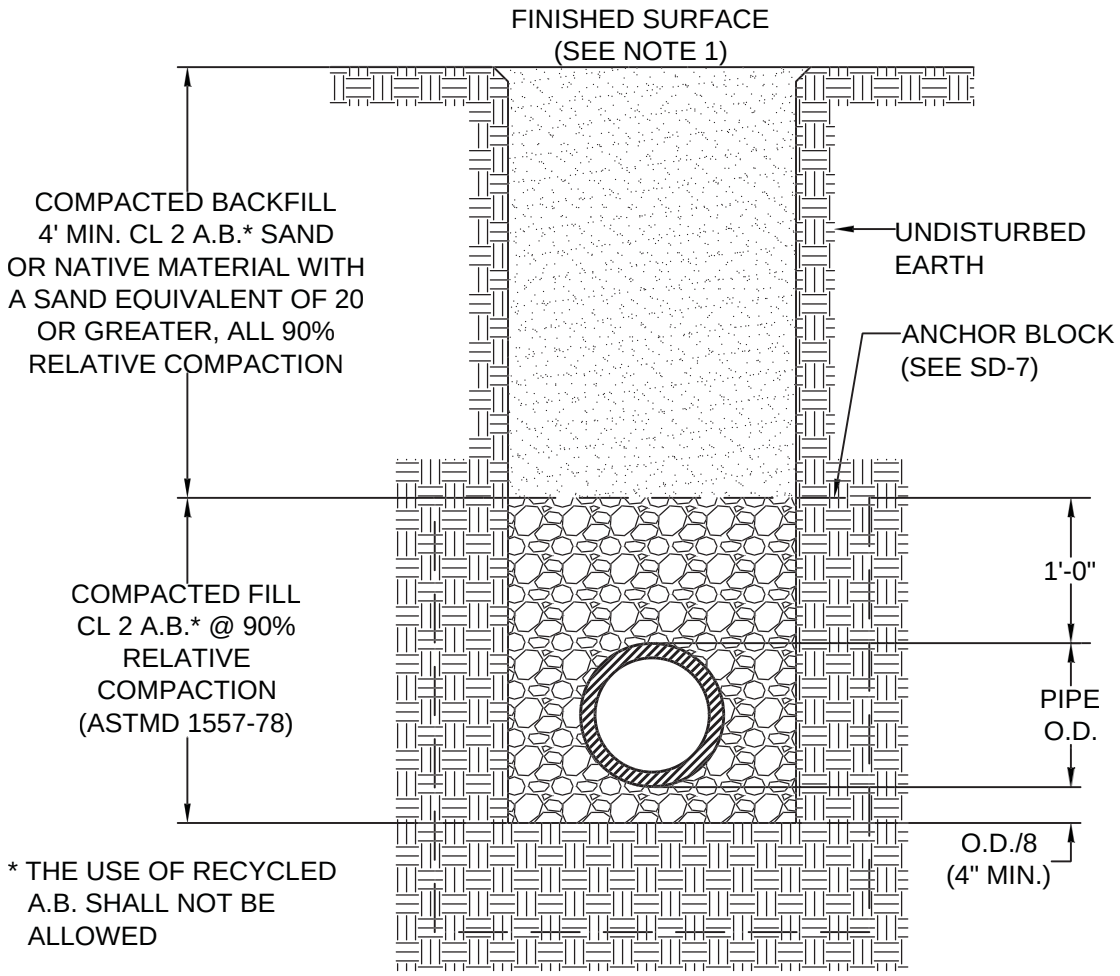

* THE USE OF RECYCLED A.B. SHALL NOT BE ALLOWED

NOTES:

1. FINISHED SURFACE SHALL BE PLANTED PER BAY AREA STORM WATER MANAGEMENT AGENCY ASSOCIATION.

2. THIS STANDARD SHALL BE USED IN EASEMENTS WHERE THE SURFACE GRADE IS GREATER THAN 30% OR WHEN DESIGNATED ON THE PLAN.

3. THE STORM DRAIN PIPE MUST BE LAID IN A TRENCH EXCAVATED IN THE COMPACTED FILL SLOPE AND DEEP ENOUGH TO PROVIDE AT LEAST 4' OF COVER OVER THE SEWER PIPE.

4. CERTIFICATION IS REQUIRED BY A SOIL TESTING LABORATORY AND SOILS ENGINEER THAT THE COMPACTION FOR THE BACK FILL MEETS THE GRADING PLAN REQUIREMENTS ESPECIALLY WHEN STORM DRAIN IS LOCATED IN A COMPACTED FILL AREA.

(Not To Scale)

REGISTERED PROFESSIONAL ENGINEER
BALWINDER S. GREWAL
C 49122
EXP. 9/30/14
STATE OF CALIFORNIA

PUBLIC WORKS DEPARTMENT

THE CITY OF BRENTWOOD

STEEP SLOPE EROSION PROTECTION CERTIFIED COMPACTION

BALWINDER S. GREWAL CITY ENGINEER

DATE: JULY 31, 2003

REVISED: DEC. 31, 2013

SHEET No.

SD-9a

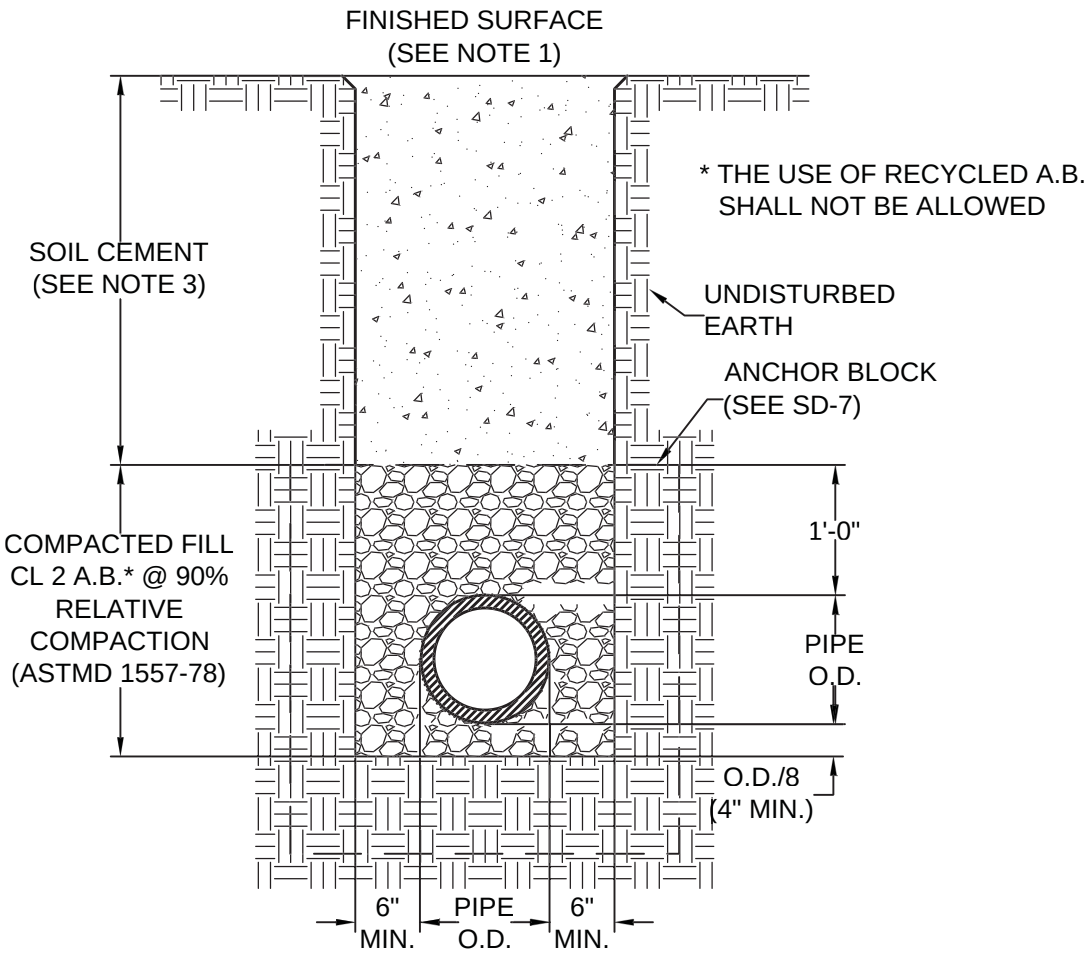

NOTES:

1. FINISHED SURFACE SHALL BE PLANTED PER BAY AREA STORM WATER MANAGEMENT AGENCY ASSOCIATION.

2. THIS STANDARD SHALL BE USED IN EASEMENTS WHERE THE SURFACE GRADE IS GREATER THAN 30% OR WHEN DESIGNATED ON THE PLAN; IN SOFT SANDSTONE, SHALE, OR ROCK WHEN REQUIRED BY CITY ENGINEER.

3. THE SOIL-CEMENT SHALL CONSIST OF TWO SACKS OF PORTLAND CEMENT PER CUBIC YARD OF BACKFILL MATERIAL WITH SUFFICIENT FINES TO FILL ALL VOIDS. THE SOIL AND CEMENT SHALL BE THOROUGHLY DRY MIXED. AFTER MIXING, WATER SHALL BE ADDED IN A QUANTITY SUFFICIENT ONLY TO SLIGHTLY MOISTEN THE MIXTURE SO THAT IT CAN BE PACKED BY HAND INTO A BALL AND RETAIN ITS SHAPE BUT NOT IN WET HANDS. SOIL-CEMENT SHALL BE MECHANICALLY RAMMED INTO PLACE IN THE TRENCH IMMEDIATELY AFTER THE WATER IS ADDED.

(Not To Scale)

PUBLIC WORKS DEPARTMENT

THE CITY OF BRENTWOOD

STEEP SLOPE EROSION PROTECTION WITH SOIL CEMENT BACKFILL

BALWINDER S. GREWAL CITY ENGINEER

DATE:	JULY 31, 2003	SHEET No.
REVISED:	DEC. 31, 2013	SD-9b

NOTES:

1. TWO (2) INCH DEEP SEAT TO CORRESPOND TO MANHOLE SHAFT, GROUT BETWEEN SHAFT AND SEAL.
2. CONSTRUCT DEEP MANHOLE LANDING(S) PER BRENTWOOD STANDARD PLAN. INCREASE STRUCTURE BOTTOM WIDTH TO 4' MINIMUM WHEN THE COMBINED DEPTH OF THE PIPE DIAMETER AND MANHOLE SHAFT (M) IS 20' OR GREATER AND THE MANHOLE SHAFT IS GREATER THEN 12', OR AS DIRECTED BY THE CITY ENGINEER.
3. THIS STRUCTURE IS TO BE USED FOR ANY STORM DRAIN PIPE SIZE CHANGE WITH OR WITHOUT A LATERAL FOR PIPE SIZE GREATER THAN 36".
4. REFER TO SD-20d FOR F AND T VALUES.

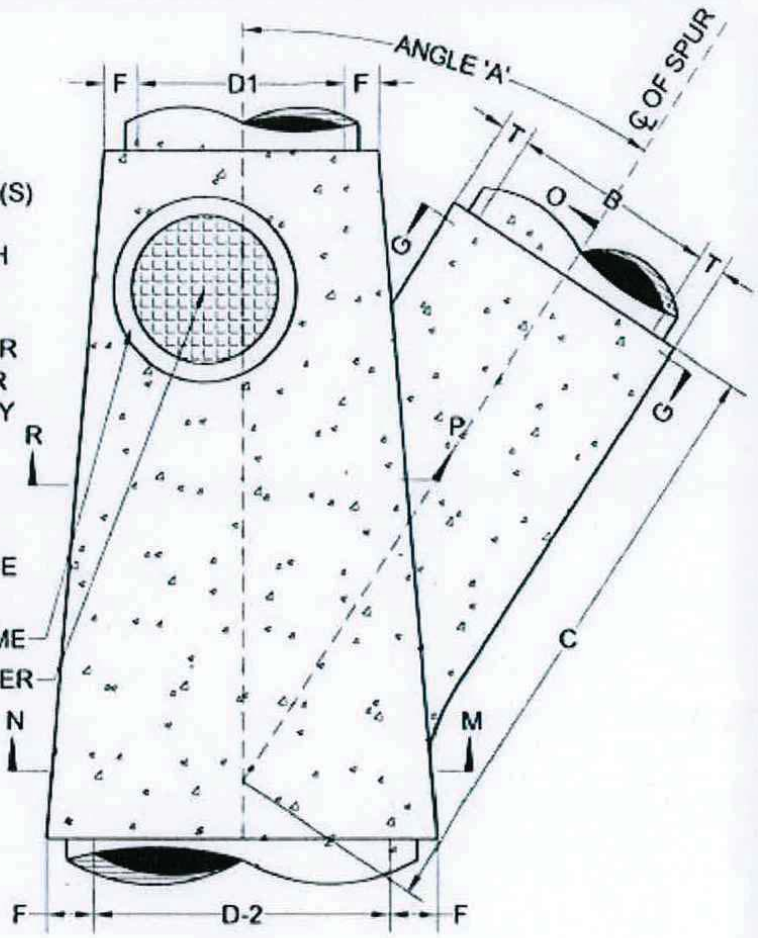

PLAN

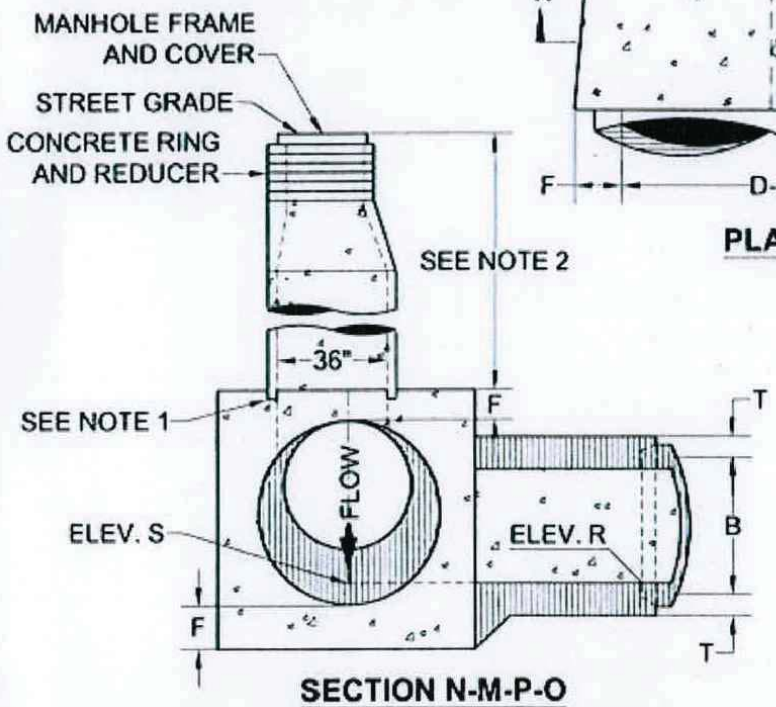

SECTION N-M-P-O

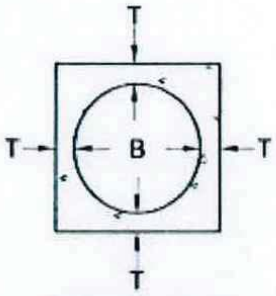

SECTION G-G

(Not To Scale)

REGISTERED PROFESSIONAL ENGINEER
BALWINDER S. GREWAL
C 49122
EXP. 9/30/14
STATE OF CALIFORNIA

PUBLIC WORKS DEPARTMENT

THE CITY OF BRENTWOOD

TRANSITION STRUCTURE-DETAIL 1

BALWINDER S. GREWAL CITY ENGINEER

DATE:	MAR. 12, 2001	SHEET No.
REVISED:	DEC. 31, 2013	SD-10a

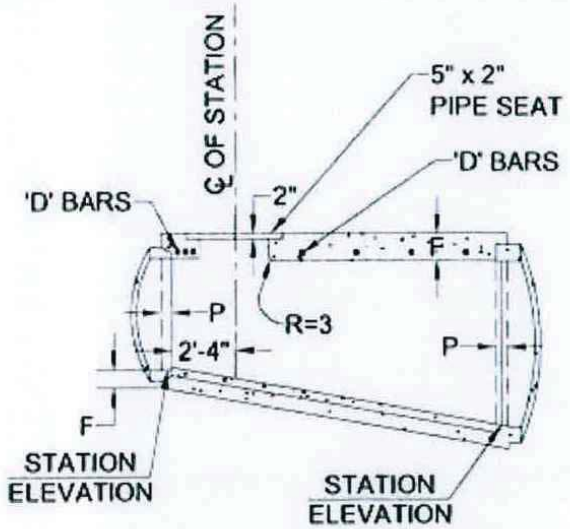

LONGITUDINAL SECTION

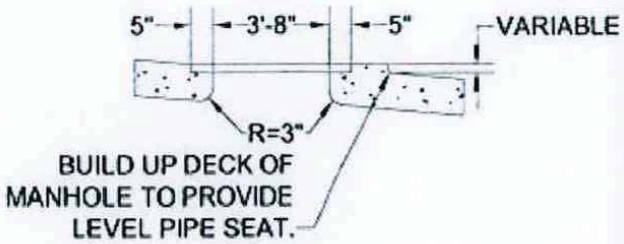

SEAT FOR SHAFT
WHEN TOP IS NOT LEVEL

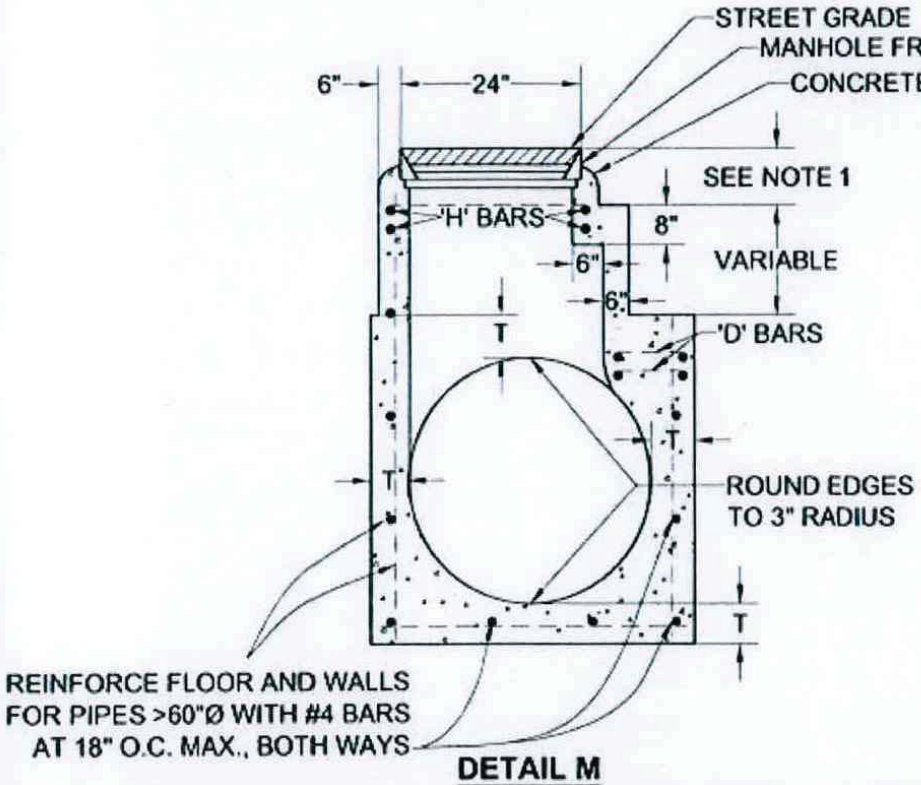

DETAIL M

NOTES:

1. FOR PAVED STREETS MAXIMUM DEPTH IS 11" AND MINIMUM DEPTH IS 8-½". FOR UNPAVED STREETS MAXIMUM DEPTH IS 16" AND MINIMUM DEPTH IS 15".
2. 'H' BARS SHALL BE #4 AT 6" O.C., HOOPS.
3. 'A' AND 'B' BARS, SIDE SPUR NOT SHOWN FOR CLARITY.

(Not To Scale)

REGISTERED PROFESSIONAL ENGINEER
BALWINDER S. GREWAL
C 49122
EXP. 9/30/14
STATE OF CALIFORNIA

PUBLIC WORKS DEPARTMENT

THE CITY OF BRENTWOOD

TRANSITION STRUCTURE-DETAIL 2

BALWINDER S. GREWAL CITY ENGINEER

DATE:	MAR. 12, 2001	SHEET No.
REVISED:	DEC. 31, 2013	SD-10b

BAR SIZES PROJECTED ON R-P-O		
D2 OR B	A OR B BARS	D OR F BARS
**24"-39"	#5 AT 3"	#4 AT 6"
42"-84"	#6 AT 3"	#5 AT 6"
90"-144"	#7 AT 3"	#6 AT 6"

** FOR STRUCTURE WITHOUT MANHOLE, REVISE D2 OR B TO READ 12"-39".

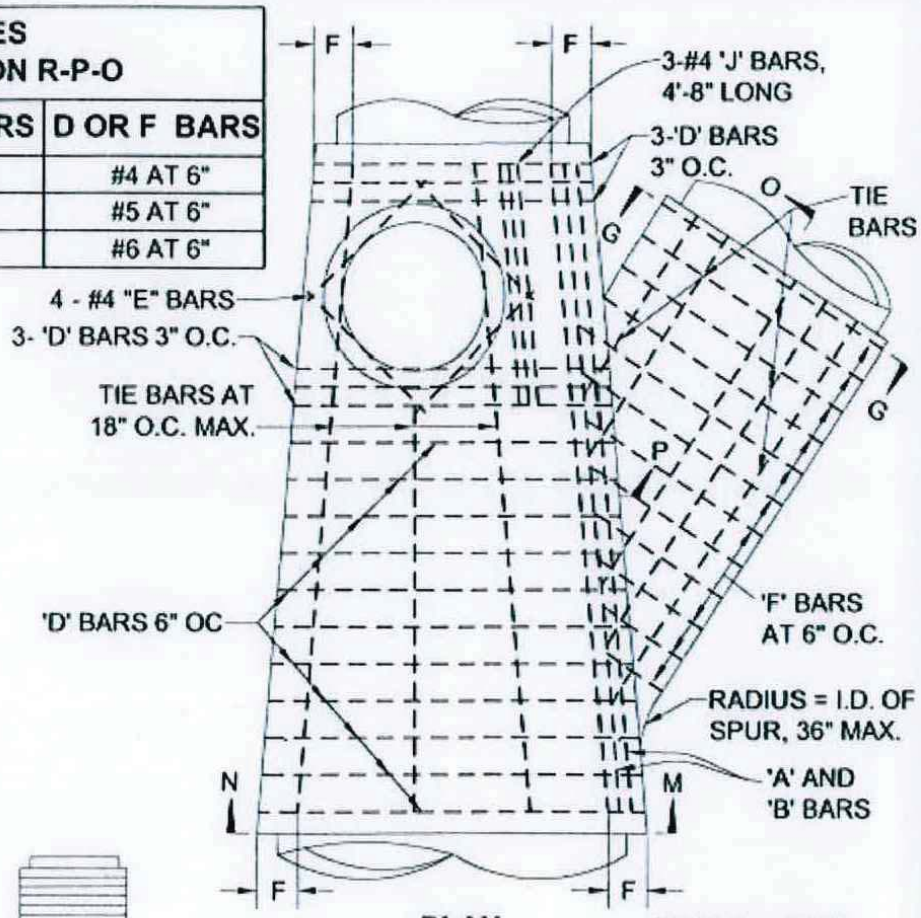

PLAN

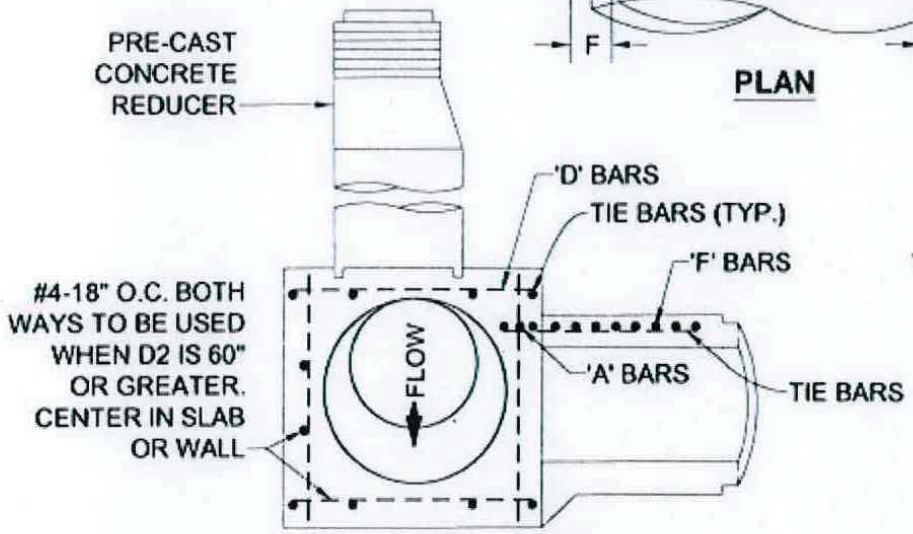

SECTION N-M-P-O

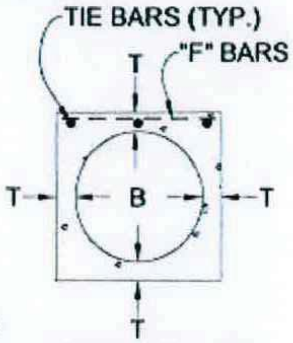

SECTION G-G

(Not To Scale)

REGISTERED PROFESSIONAL ENGINEER
BALWINDER S. GREWAL
C 49122
EXP. 9/30/14
STATE OF CALIFORNIA

PUBLIC WORKS DEPARTMENT

THE CITY OF BRENTWOOD

TRANSITION STRUCTURE-DETAIL 3

BALWINDER S. GREWAL CITY ENGINEER

DATE:	MAR. 12, 2001	SHEET No.
REVISED:	DEC. 31, 2013	SD-10c

TABLE OF VALUES FOR F AND T ON SHEETS SD-20a AND SD-20c			
D1 OR D2	F	B	T
36" - 48"	8"	18"	4-½"
51"	8-½"	21"	5"
54"	9"	24"	5-¼"
57"	9-¼"	27"	5-½"
60"	9-½"	30"	6"
63"	10"	33"	6-¼"
66"	10-¼"	36"	6-½"
69"	10-¾"	39"	7"
72"	11"	42"	7-½"
78"	11-¾"	45"	7-¾"
84"	12-½"	48"	8"
90"	13-¼"	51"	8-½"
96"	14"	54"	9"
102"	15-½"	57"	9-¼"
108"	16"	60"	9-½"
114"	16-½"	63"	10"
120"-126"	17"	66"	10-½"
132"-138"	17-½"	69"	10-¾"
144"	18"	72"	11"
		78"	11-¾"
		84"	12-½"
		90"	13-¼"
		96"	14"
		102"	15-½"
		108"	16"
		114"	16-½"
		120"-126"	17"
		132"-138"	17-½"
		144"	18"

(Not To Scale)

REGISTERED PROFESSIONAL ENGINEER
BALWINDER S. GREWAL
C 49122
EXP. 9/30/14
STATE OF CALIFORNIA

PUBLIC WORKS DEPARTMENT

THE CITY OF BRENTWOOD

TRANSITION STRUCTURE-TABLE

BALWINDER S. GREWAL CITY ENGINEER

DATE: MAR. 12, 2001

REVISED: DEC. 31, 2013

SHEET No.

SD-10d

NOTES:

1. **LATERALS:** IF LATERALS ENTER BOTH SIDES OF STRUCTURE, ACCESS SHAFT SHALL BE LOCATED ON SIDE RECEIVING THE SMALLER LATERAL.

2. **CENTER OF MANHOLE SHAFT** SHALL BE LOCATED OVER CENTER LINE OF STORM DRAIN WHEN D1 IS 48" OR LESS. IN THIS CASE PLACE 4-E BARS SYMMETRICALLY AROUND SHAFT 45° WITH CENTER LINE.

3. **LENGTH OF STRUCTURE** MAY BE INCREASED AT OPTION TO MEET PIPE ENDS, BUT ANY CHANGE IN LOCATION OF SPUR MUST BE APPROVED BY THE CITY ENGINEER.

4. **DETAIL M:** WHEN DEPTH OF MANHOLE FROM STREET TO TOP OF STRUCTURE IS LESS THAN 2'-10½" FOR PAVED STREETS OR 3'-6" FOR UNPAVED STREETS, CONSTRUCT MONOLITHIC SHAFT PER DETAIL M. CONSTRUCTION OF SHAFT AS PER DETAIL M FOR ANY DEPTH OF MANHOLE IS OPTIONAL. WHEN D IS 48" OR LESS, CENTER OF SHAFT SHALL BE LOCATED AS PER NOTE-2.

5. **REINFORCING STEEL:** STRAIGHT BARS, 1-½" CLEAR OF FACE OF CONCRETE UNLESS SHOWN OTHERWISE. TIE BARS SHALL BE #4 SPACED 18" ON CENTERS OR CLOSER. STEEL SCHEDULE DETAILED ON PLAN.

6. **EMBEDMENT 'P'** SHALL BE 5" FOR D2=96" OR LESS AND 8" FOR D2 OVER 96".

7. **RINGS REDUCER, AND PIPE** FOR ACCESS SHAFT SHALL BE SEATED IN 1:2 MIX MORTAR AND NEATLY PAINTED OR WIPED INSIDE SHAFT.

8. **FLOOR OF STRUCTURE** SHALL BE STEEL TROWLED TO SPRING LINE.

9. **BODY OF STRUCTURE,** INCLUDING SPUR, SHALL BE CONSTRUCTED IN ONE CONTINUOUS OPERATION, EXCEPT THAT A CONSTRUCTION JOINT AT THE SPRING LINE, WITH LONGITUDINAL KEYWAY, IS PERMITTED.

10. **ELEVATIONS** APPLIES AT CENTER OF MAIN LINE ON PROLONGATION OF INVERT SPUR.

11. **WHEN MANHOLE IS OMITTED FROM STRUCTURE** THE FOLLOWING NOTES SHALL APPLY:
    A. FOR D2 OR B FROM 12" THROUGH 33", F AND T SHALL BE 8".
    B. FOR D2 OR B GREATER THAN 33" REFER TO SD-20d TABLE OF VALUES.
    C. OMIT 'E', 'J' AND 'H' BARS.
    D. OMIT 'D' BARS SPACED AT 3" AND USE SPACING INDICATED ON THE TABLE.
    E. OMIT 'A', 'B' AND 'F' BARS FOR STRUCTURE WITHOUT SIDE INLETS.

12. **ALL CAST-IN-PLACE CONCRETE** SHALL HAVE MINIMUM 28 DAY STRENGTH OF 3,000 PSI. STEEL SHALL CONFORM WITH ASTM A-615, GRADE 60.

13. **STRUCTURE** SHALL NOT BE BACKFILLED UNTIL CONCRETE HAS ACHIEVED 3,000 PSI MINIMUM STRENGTH.

(Not To Scale)

REGISTERED PROFESSIONAL ENGINEER
BALWINDER S. GREWAL
C 49122
EXP. 9/30/14
STATE OF CALIFORNIA

PUBLIC WORKS DEPARTMENT

THE CITY OF BRENTWOOD

TRANSITION STRUCTURE-NOTES

BALWINDER S. GREWAL CITY ENGINEER

DATE:	MAR. 12, 2001	SHEET No.
REVISED:	DEC. 31, 2013	SD-10e

NOTES:

1. ONE EYE BOLT SHALL BE PLACED 12" FROM EACH END OF FACE PLATE.
2. EYE BOLTS SHALL BE SYMMETRICALLY SPACED IN THE CURB OPENING SO THAT THE UNSUPPORTED SPAN IS NOT MORE THAN 4. SUPPORT BOLTS, WHEN USED, SHALL BE CONSIDERED AS EYE BOLTS IN THE SPACING.
3. ONE COUPLING SHALL BE PLACED 6" TO THE RIGHT OR LEFT OF EACH EYE BOLT WITH THE EXCEPTION OF THE LAST EYE BOLT. COUPLINGS SHALL BE THREADED.
4. STAINLESS STEEL SUPPORT BOLTS SHALL BE INSTALLED WHEN LENGTH OF CURB OPENING EXCEEDS 7'-0" AND SHALL BE SPACED AT NOT MORE THAN 7'-0" O.C. AND NOT LESS THAN 5'-0" O.C.
5. FACE PLATE ANCHORS SHALL BE UNIFORM SPACED NOT TO EXCEED 4' BETWEEN CENTERS AND SHALL BE PLACED 4½" FROM EACH END OF THE FACE PLATE. AN ANCHOR SHALL BE PLACED OVER EACH W-BEAM IN A GRATING BEAM.
6. A COUPLING MAY BE OMITTED PROVIDED THE PROTECTION BAR IS REMOVABLE AFTER INSTALLATION. ALL METAL SHALL BE GALVANIZED AFTER FABRICATION.
7. SUPPORT BOLTS, EYE BOLTS, AND ANCHORS MAY BE ATTACHED BY A FULL PENETRATION BUTT WELD AS AN ALTERNATE.
8. CURB SECTION SHALL MATCH ADJACENT CURB TYPE.
9. CURB OPENING SHALL CONFORM TO CURB ALIGNMENT.

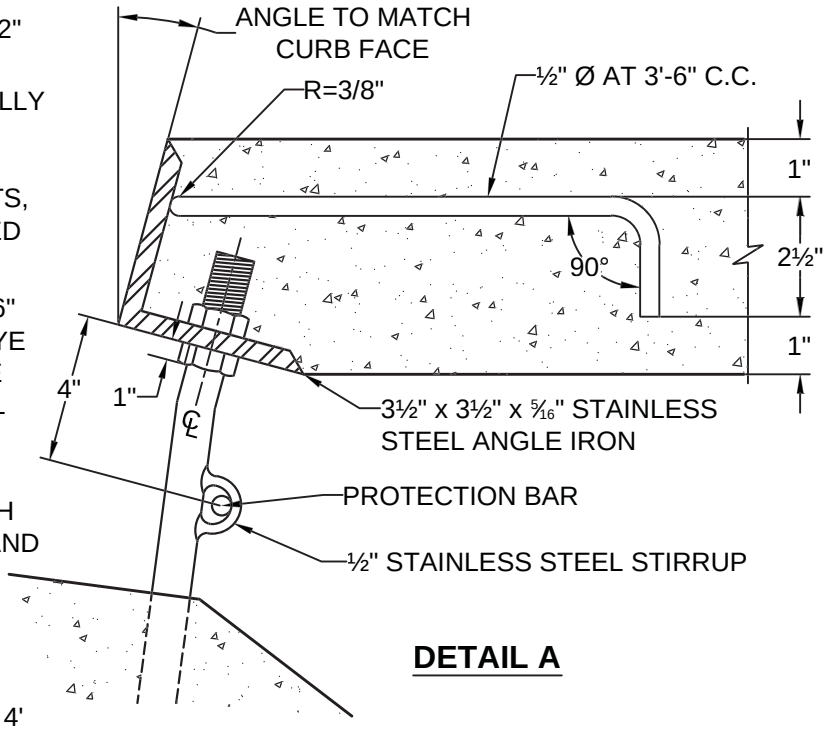

DETAIL A

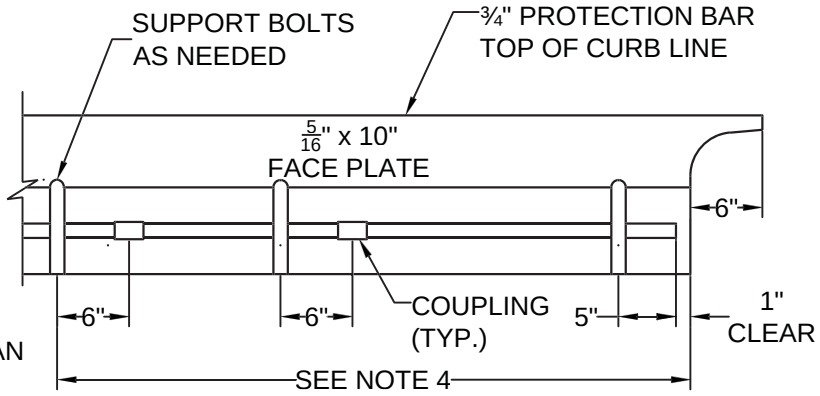

PROTECTION BAR DETAIL

(Not To Scale)

REGISTERED PROFESSIONAL ENGINEER
BALWINDER S. GREWAL
C 49122
EXP. 9/30/14
STATE OF CALIFORNIA

PUBLIC WORKS DEPARTMENT

THE CITY OF BRENTWOOD

PROTECTION BAR DETAIL

BALWINDER S. GREWAL CITY ENGINEER

DATE:	MAR. 29, 2001	SHEET No.
REVISED:	DEC. 31, 2013	SD-11a

NOTES

1. ONE EYE BOLT SHALL BE PLACED 12" FROM EACH END OF FACE PLATE.
2. EYE BOLTS SHALL BE SYMMETRICALLY SPACED IN THE CURB OPENING SO THAT THE UNSUPPORTED SPAN IS NOT MORE THAN 4. SUPPORT BOLTS, WHEN USED, SHALL BE CONSIDERED AS EYE BOLTS IN THE SPACING.
3. ONE THREADED COUPLING SHALL BE PLACED 6" TO THE RIGHT OR LEFT OF EACH EYE BOLT WITH THE EXCEPTION OF THE LAST EYE BOLT.
4. STAINLESS STEEL SUPPORT BOLTS SHALL BE INSTALLED WHEN LENGTH OF CURB OPENING EXCEEDS 7'-0" AND SHALL BE SPACED AT NOT MORE THAN 7'-0" O.C. AND NOT LESS THAN 5'-0" O.C.
5. FACE PLATE ANCHORS SHALL BE UNIFORMLY SPACED NOT TO EXCEED 4' BETWEEN CENTERS AND SHALL BE PLACED 4½" FROM EACH END OF THE FACE PLATE. AN ANCHOR SHALL BE PLACED OVER EACH W-BEAM IN A GRATING BEAM.
6. A COUPLING MAY BE OMITTED PROVIDED THE PROTECTION BAR IS REMOVABLE AFTER INSTALLATION.
7. ALL METAL SHALL BE GALVANIZED AFTER FABRICATION.
8. SUPPORT BOLTS, EYE BOLTS, AND ANCHORS MAY BE ATTACHED BY A FULL PENETRATION BUTT WELD AS AN ALTERNATE.
9. CURB SECTION SHALL MATCH ADJACENT CURB TYPE.
10. CURB OPENING SHALL CONFORM TO CURB ALIGNMENT.

(Not To Scale)

REGISTERED PROFESSIONAL ENGINEER
BALWINDER S. GREWAL
C 49122
EXP. 9/30/14
STATE OF CALIFORNIA

PUBLIC WORKS DEPARTMENT

THE CITY OF BRENTWOOD

PROTECTION BAR NOTES

BALWINDER S. GREWAL CITY ENGINEER

DATE:	MAR. 14, 2001	SHEET No.
REVISED:	DEC. 31, 2013	SD-11b

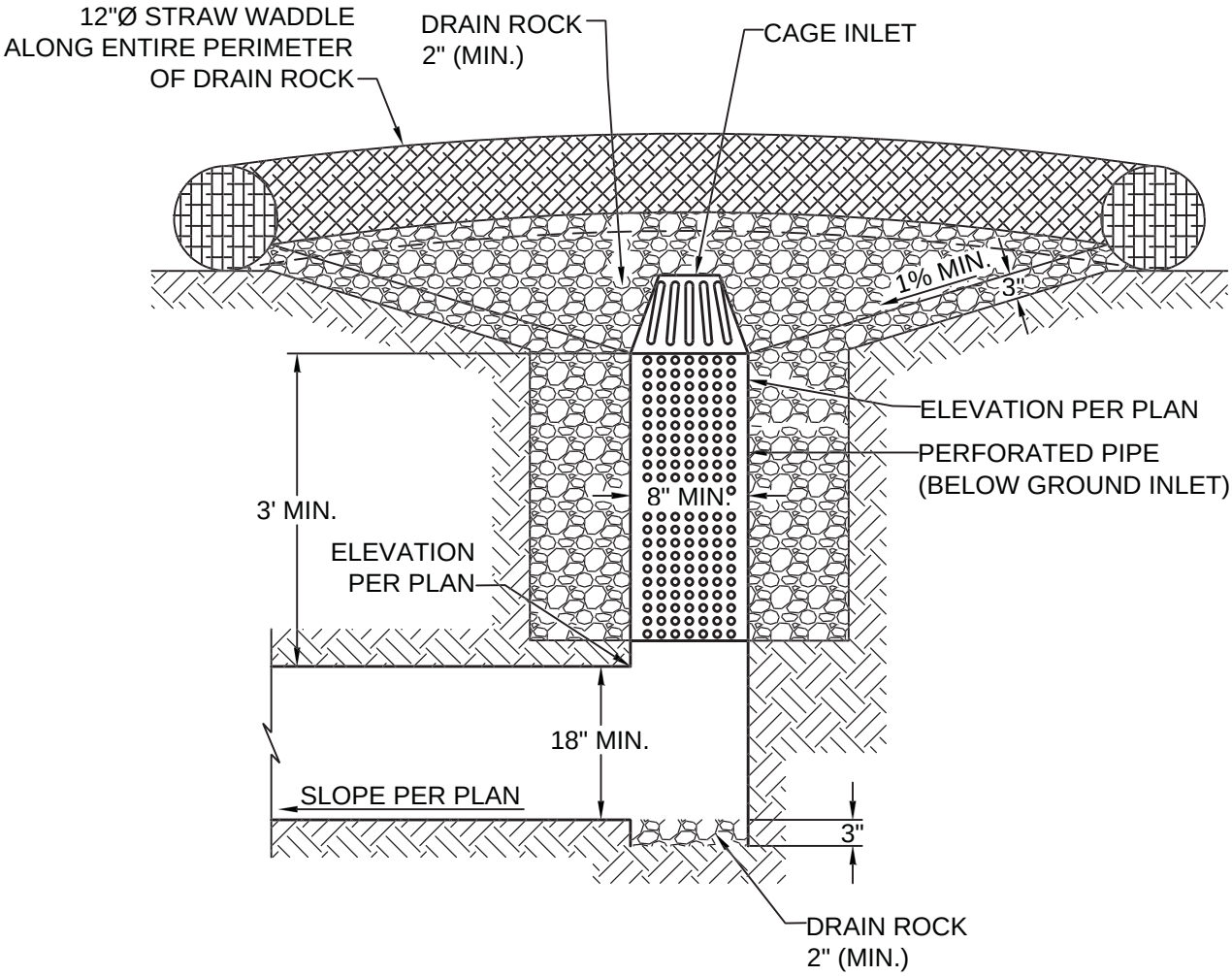

(Not To Scale)

REGISTERED PROFESSIONAL ENGINEER
BALWINDER S. GREWAL
C 49122
EXP. 9/30/14
STATE OF CALIFORNIA

PUBLIC WORKS DEPARTMENT

THE CITY OF BRENTWOOD

TEMPORARY CORRUGATED METAL PIPE RISER TYPE A

BALWINDER S. GREWAL CITY ENGINEER

DATE:	MAR.16, 2001	SHEET No.
REVISED:	DEC. 31, 2013	SD-12

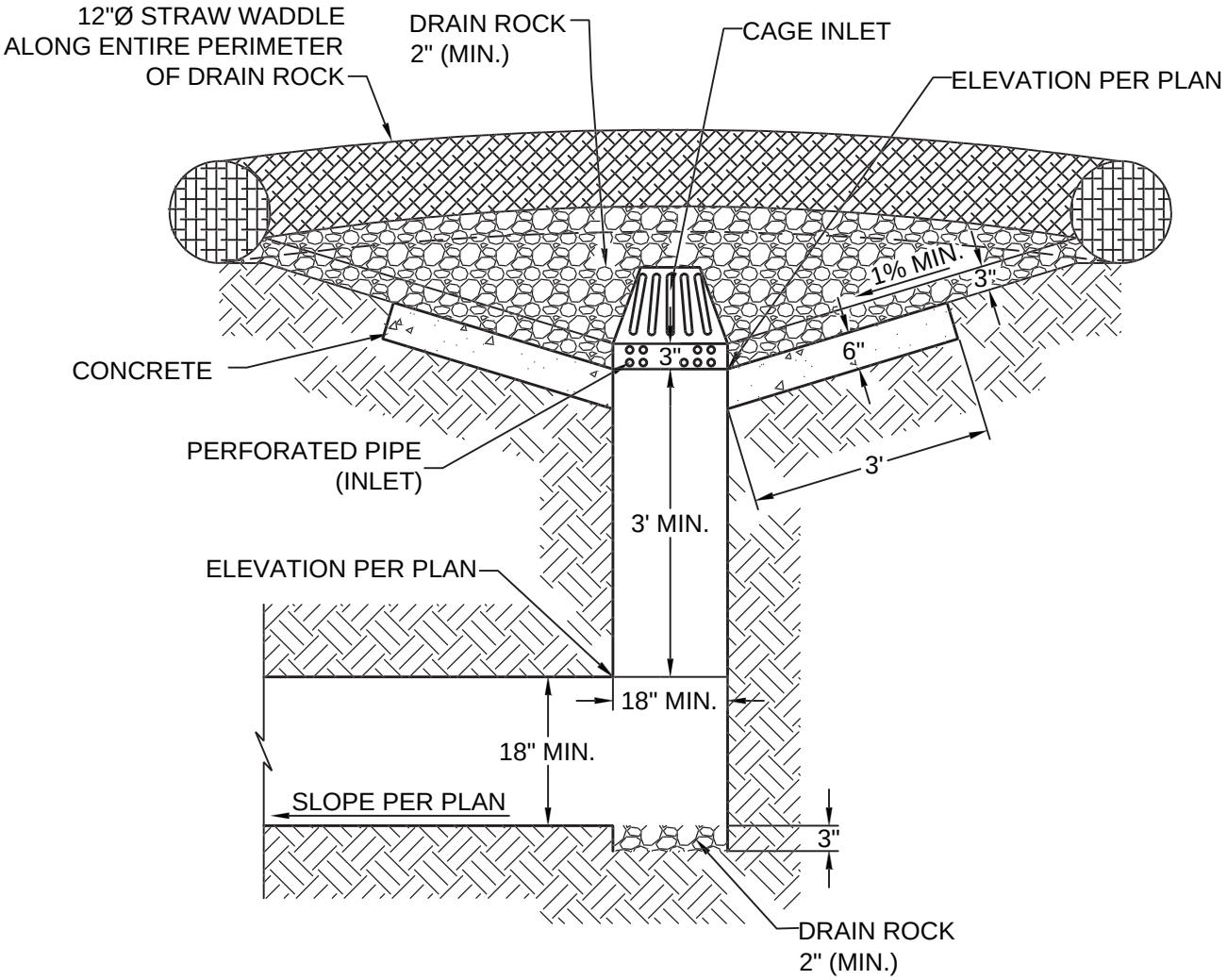

(Not To Scale)

REGISTERED PROFESSIONAL ENGINEER
BALWINDER S. GREWAL
C 49122
EXP. 9/30/14
STATE OF CALIFORNIA

PUBLIC WORKS DEPARTMENT

THE CITY OF BRENTWOOD

TEMPORARY CORRUGATED METAL PIPE RISER TYPE B

BALWINDER S. GREWAL CITY ENGINEER

DATE:	MAR. 16, 2001	SHEET No.
REVISED:	DEC. 31, 2013	SD-13

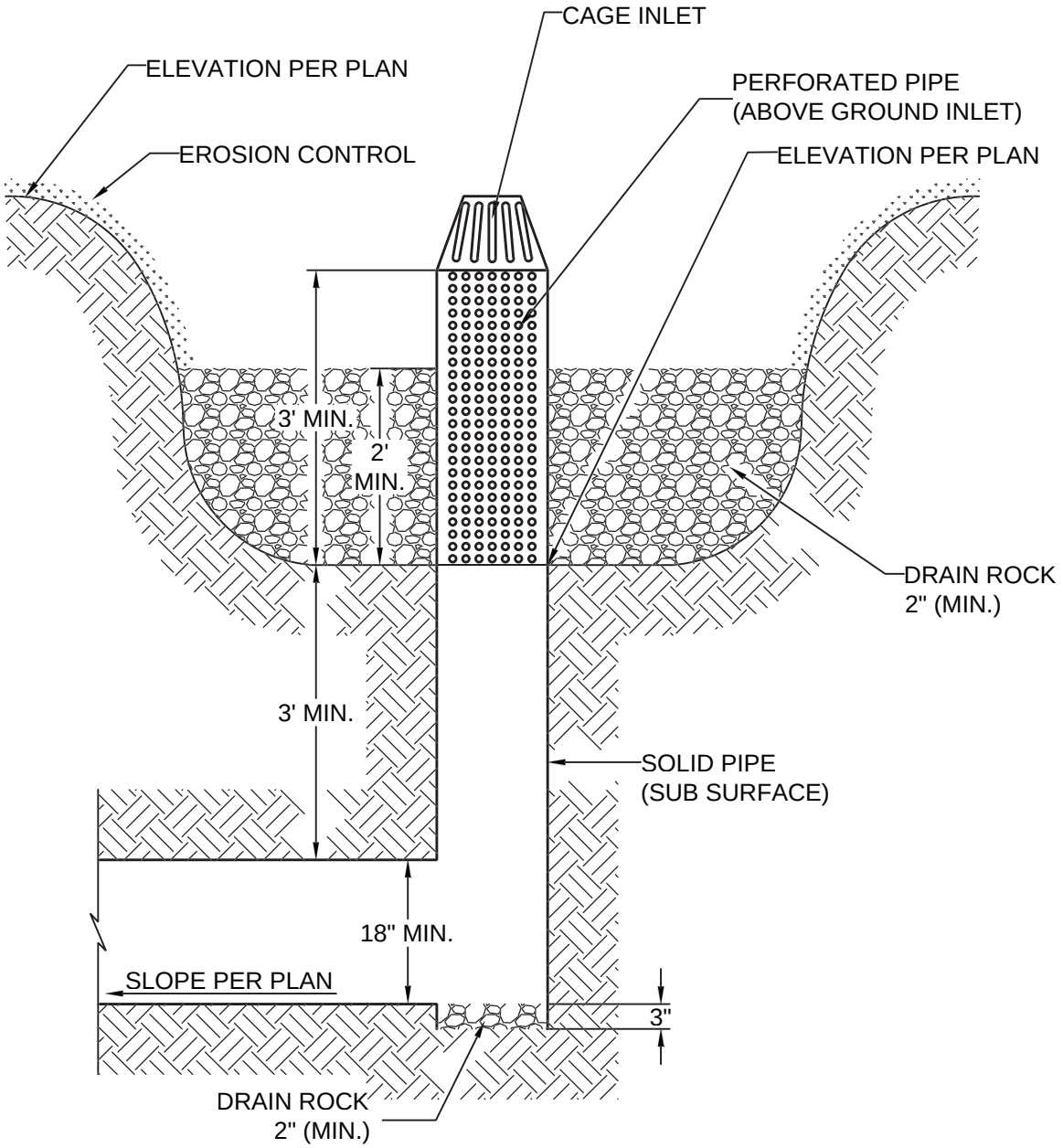

(Not To Scale)

REGISTERED PROFESSIONAL ENGINEER
BALWINDER S. GREWAL
C 49122
EXP. 9/30/14
STATE OF CALIFORNIA

PUBLIC WORKS DEPARTMENT

THE CITY OF BRENTWOOD

TEMPORARY CORRUGATED METAL PIPE RISER TYPE C

BALWINDER S. GREWAL CITY ENGINEER

DATE:	MAR. 19, 2001	SHEET No.
REVISED:	DEC. 31, 2013	SD-14

WPJ - WEAKENED PLANE JOINT

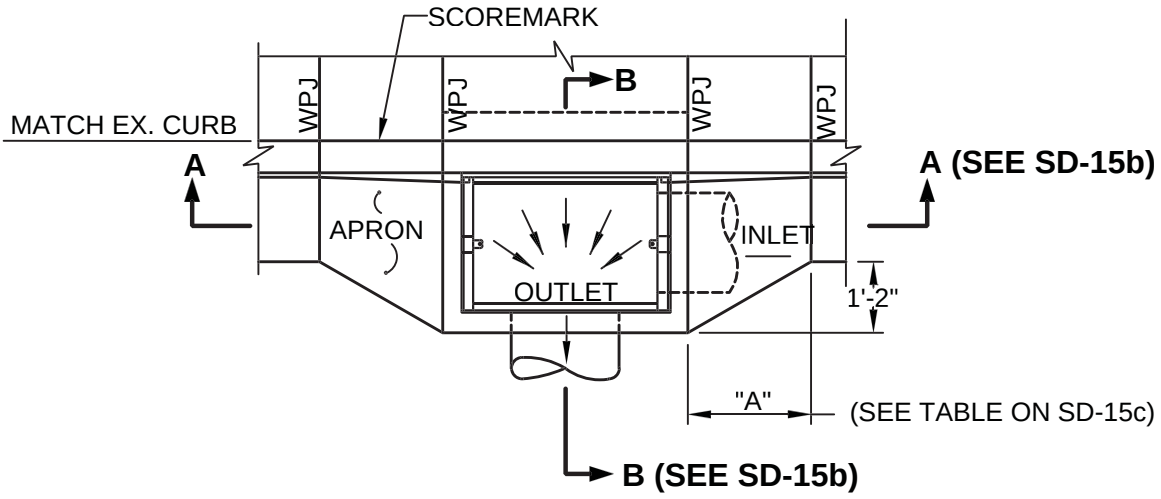

PLAN

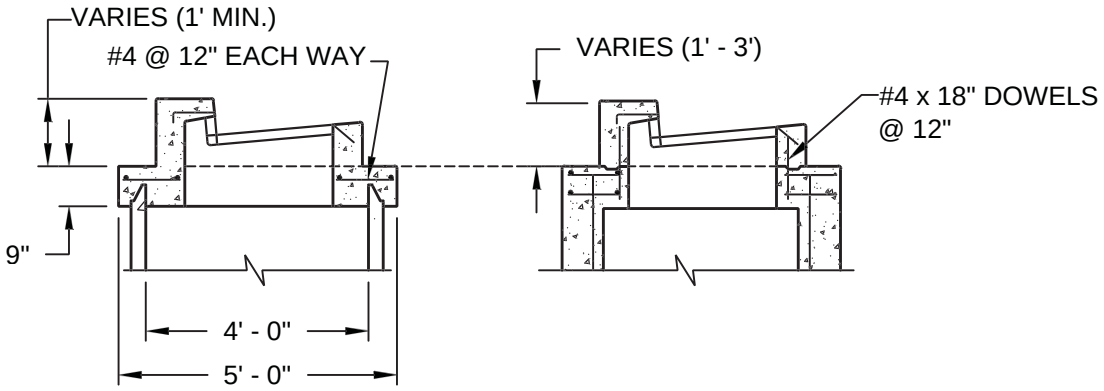

ON PRECAST MANHOLE BARREL

ON MANHOLE BASE

SECTIONS OF TYPE "A" OPENING

(Not To Scale)

REGISTERED PROFESSIONAL ENGINEER
BALWINDER S. GREWAL
C 49122
EXP. 9/30/14
STATE OF CALIFORNIA

PUBLIC WORKS DEPARTMENT

THE CITY OF BRENTWOOD

TYPE "A" INLET - DETAILS

BALWINDER S. GREWAL CITY ENGINEER

DATE:	JAN. 20, 2005	SHEET No.
REVISED:	DEC. 31, 2013	SD-15a

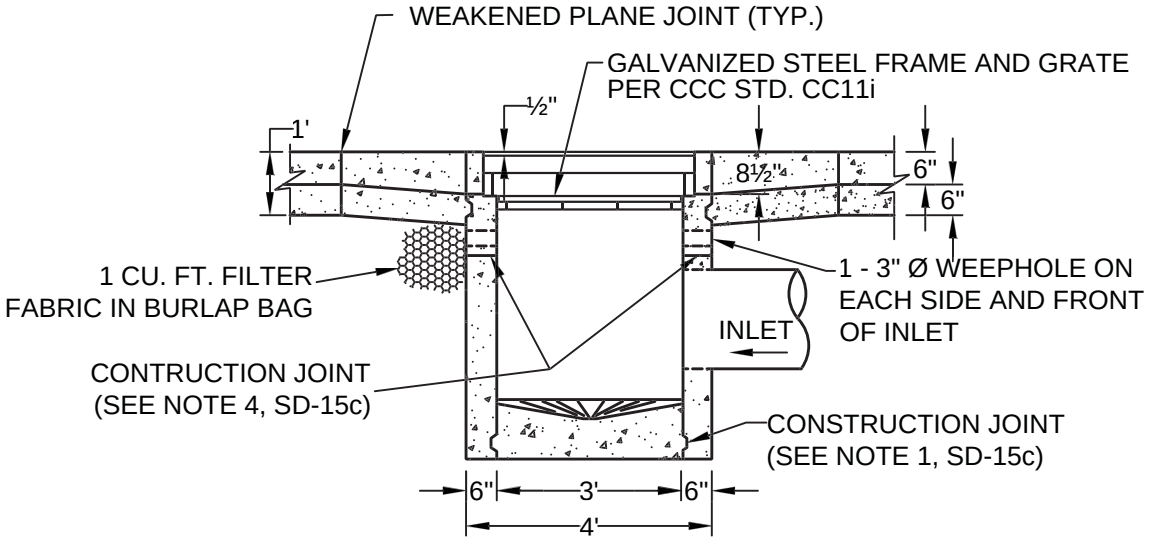

SECTION A - A

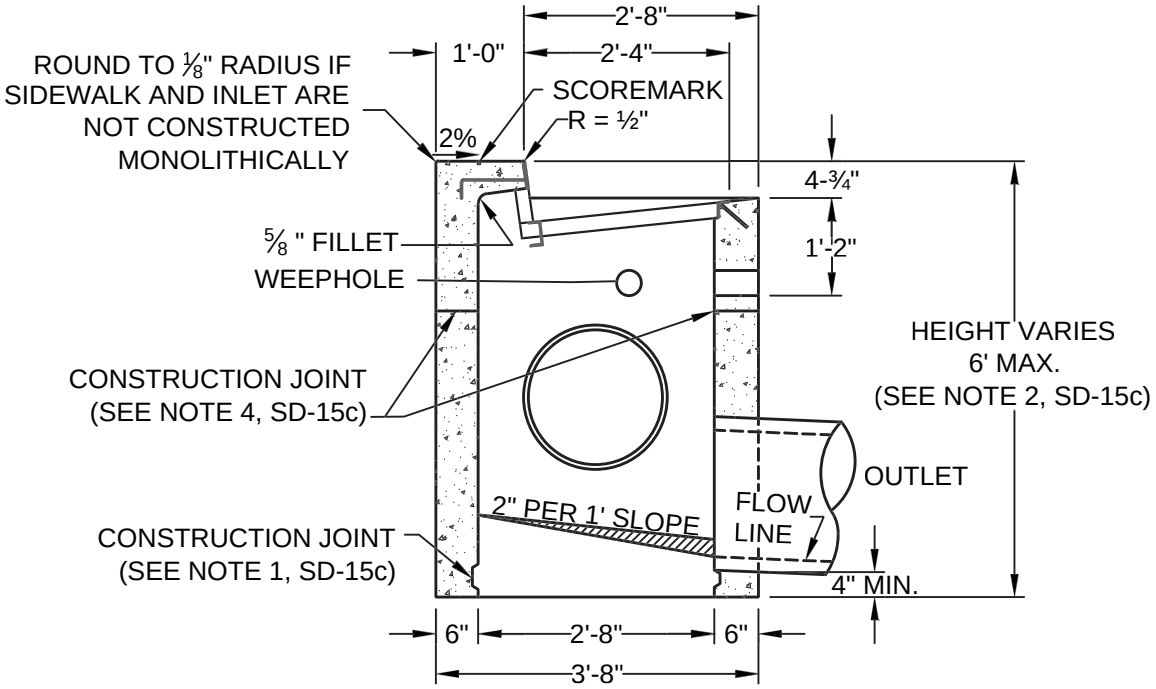

SECTION B - B

(Not To Scale)

REGISTERED PROFESSIONAL ENGINEER
BALWINDER S. GREWAL
C 49122
EXP. 9/30/14
STATE OF CALIFORNIA

PUBLIC WORKS DEPARTMENT

THE CITY OF BRENTWOOD

TYPE "A" INLET - SECTIONS

BALWINDER S. GREWAL CITY ENGINEER

DATE:	JAN. 20, 2005	SHEET No.
REVISED:	DEC. 31, 2013	SD-15b

NOTES:

1. CONSTRUCTION JOINTS ARE OPTIONAL WHERE SHOWN. OTHER LOCATIONS ARE SUBJECT TO THE APPROVAL OF THE CITY ENGINEER.

2. WHEN DIMENSION "H" EXCEEDS 6', USE A MANHOLE WITH A TYPE "A" INLET OPENING ON TOP.

3. INLET AND OUTLET PIPES SHALL NOT INTERCEPT A BOX THROUGH A CORNER. IF THE PIPE IS TOO LARGE OR IF THE SKEW ANGLE IS TOO GREAT TO PERMIT THE OPENING TO BE MADE IN A SINGLE WALL, USE A MANHOLE BASE WITH A TYPE "A" INLET OPENING ON TOP.

4. CONSTRUCTION JOINTS SHOWN ARE PERMITTED WHEN TOP PORTION OF INLET IS TO BE CONSTRUCTED MONOLITHICALLY WITH CURB AND SIDEWALK, IN WHICH CASE THE FOLLOWING APPLY:

   - CONCRETE ABOVE CONSTRUCTION JOINT SHALL BE CLASS 'B' (5 SACKS PER CU. YD.)
   - CONCRETE BELOW CONSTRUCTION JOINT SHALL BE CLASS 'A' (6 SACKS PER CU. YD.)
   - CONSTRUCTION JOINT SHALL BE LOCATED AT PAVEMENT SUBGRADE.

   WHEN INLET IS CONSTRUCTED AS A SINGLE UNIT, ALL CONCRETE SHALL BE CLASS A.

5. THE FOLLOWING DURACAST CURB MARKER* (ITEM SDC - LG OVAL) SHALL BE INSTALLED DIRECTLY ON TOP OF THE CURB WHERE INLET IS LOCATED PER THE MANUFACTURER'S INSTRUCTIONS. IN THE ABSENCE OF A CURB WITHIN A NON-TRAFFIC AREA, IT SHALL BE INSTALLED ADJACENT TO THE INLET AS DIRECTED BY THE CITY ENGINEER'S REPRESENTATIVE.

* DURACAST MARKERS AND ADHESIVE ARE AVAILABLE FROM **REVEL ENVIRONMENTAL MANUFACTURING, INC.** , 960-B DETROIT AVENUE, CONCORD, CA 94518; PHONE (888) 526-4736; www.remfilters.com.

WITHIN TRAFFIC AREAS, THE FOLLOWING SHALL BE STENCILED USING A 2-STEP THERMOPLASTIC ADJACENT TO INLET OR AS DIRECTED BY THE CITY ENGINEER'S REPRESENTATIVE.

6.

UPSTREAM CURB GRADE	"A" UPSTREAM	"A" DOWNSTREAM
2% OR LESS	2'	2'
3%	3'	2'
4%	4'	2'
5%	5'	2'
6%	6'	2'
7%	7'	1'
8%	8'	1'
9%	9'	1'
10% OR MORE	10'	1'

(Not To Scale)

PUBLIC WORKS DEPARTMENT

THE CITY OF BRENTWOOD

TYPE "A" INLET - NOTES

BALWINDER S. GREWAL CITY ENGINEER

DATE:	DEC. 3, 2007	SHEET No.
REVISED:	DEC. 31, 2013	SD-15c

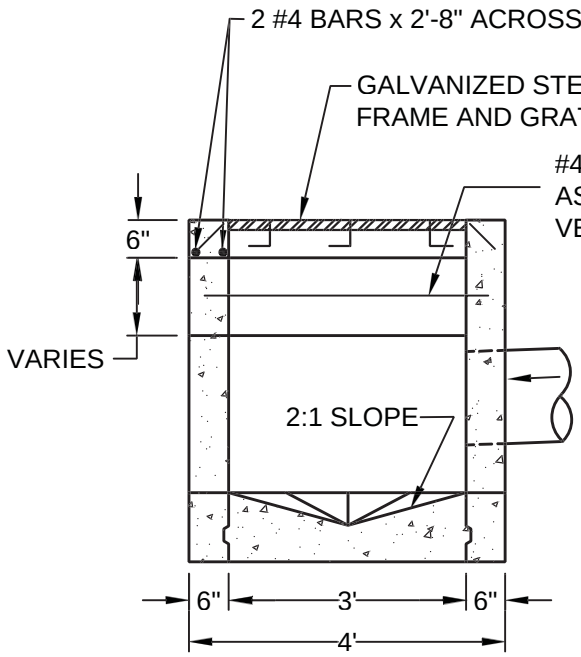

SECTION A-A

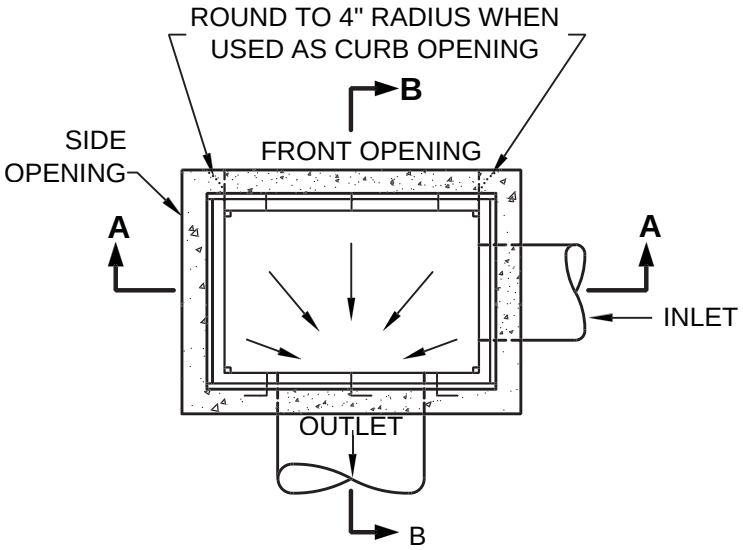

PLAN

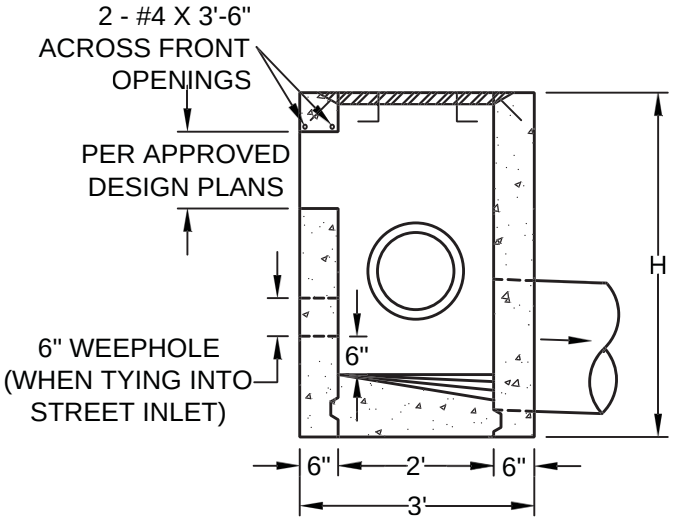

SECTION B-B

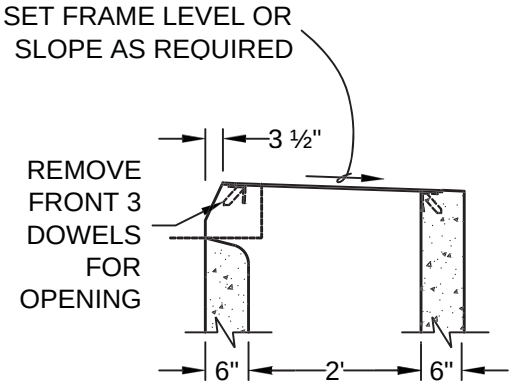

SECTION B-B
CURB OPENING MODIFICATION

(Not To Scale)

REGISTERED PROFESSIONAL ENGINEER
BALWINDER S. GREWAL
C 49122
EXP. 9/30/14
STATE OF CALIFORNIA

PUBLIC WORKS DEPARTMENT

THE CITY OF BRENTWOOD

TYPE "C" INLET - DETAILS

BALWINDER S. GREWAL CITY ENGINEER

DATE:	MAR. 30, 2001	SHEET No.
REVISED:	DEC. 31, 2013	SD-16a

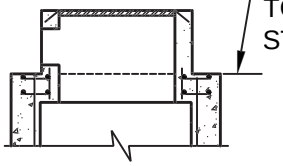

TYPE "C" OPENING ON PRECUTS MANHOLE BARREL

TYPE "C" OPENING ON MANHOLE BASE

NOTES:

1. CONSTRUCTION JOINTS ARE OPTIONAL WHERE SHOWN. OTHER LOCATIONS ARE SUBJECT TO THE APPROVAL OF THE CITY ENGINEER. KEY DIMENSIONS - ¾" TO 2-½".
2. CLEARANCE SHALL BE 1-½" FOR ALL REINFORCING STEEL.
3. INLET AND OUTLET PIPES SHALL NOT INTERCEPT A BOX THROUGH A CORNER. IF THE PIPE IS TOO LARGE OR THE SKEW ANGLE IS TOO GREAT TO PERMIT THE OPENING TO BE MADE IN A SINGLE WALL , USE A MANHOLE BASE WITH A TYPE "C" INLET OPENING ON TOP.
4. WHEN DIMENSION "H" EXCEEDS 4', USE A MANHOLE WITH A TYPE "C" INLET OPENINGS ON TOP.
5. LOCATION AND SIZE OF OPENINGS SHALL BE AS SHOWN ON PLANS OR AS OTHERWISE DETERMINED BY THE CITY ENGINEER.
6. ALL INLETS SHALL BE CONSTRUCTED WITH GRATE UNLESS THE INLET IS TO BE IN PEDESTRIAN AREA, THEN A COVER SHALL BE USED. FRAME AND GRATE PER CCC STD. CC11i.
7. PRECUTS INLET, CONFORMING TO SANTA ROSA CAST PRODUCTS CO. DRAWING NO. 846CCI, OR EQUIVALENT, CAN BE SUBSTITUTED FOR CAST-IN-PLACE INLET.

(Not To Scale)

PUBLIC WORKS DEPARTMENT

THE CITY OF BRENTWOOD

TYPE "C" INLET - SECTION AND NOTES

BALWINDER S. GREWAL CITY ENGINEER

DATE: MAR. 30, 2001

REVISED: DEC. 31, 2013

SHEET No. **SD-16b**

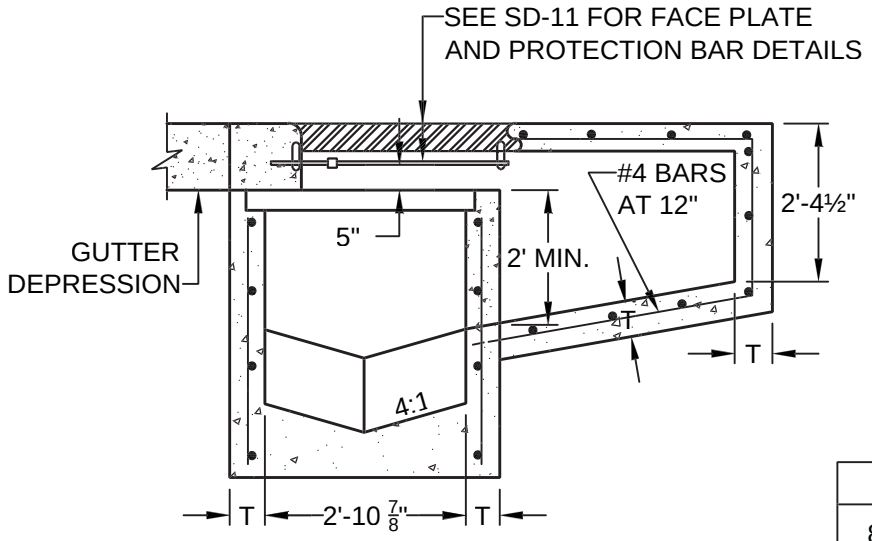

SECTION A-A

H	T
8' OR LESS	6"
8' - 1" TO 20'-0"	8"

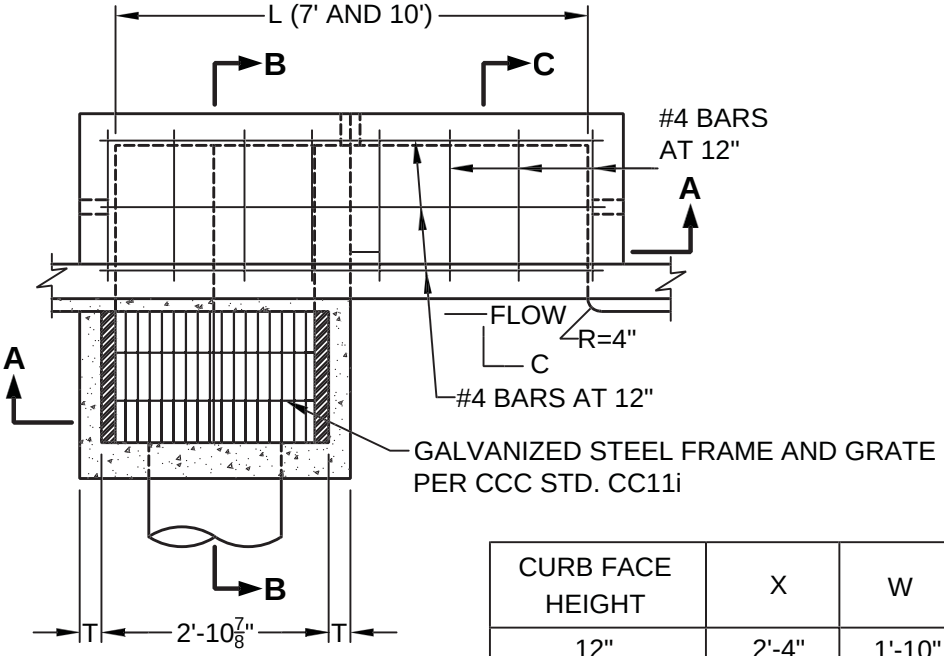

PLAN

CURB FACE HEIGHT	X	W
12"	2'-4"	1'-10"
10"	2'-4 ½'	1'-10 ½'

(Not To Scale)

REGISTERED PROFESSIONAL ENGINEER
BALWINDER S. GREWAL
C 49122
EXP. 9/30/14
STATE OF CALIFORNIA

PUBLIC WORKS DEPARTMENT

THE CITY OF BRENTWOOD

TYPE "A" INLET ALTERNATE I

BALWINDER S. GREWAL CITY ENGINEER

DATE: MAR. 28, 2001

REVISED: DEC. 31, 2013

SHEET No.

SD-17a

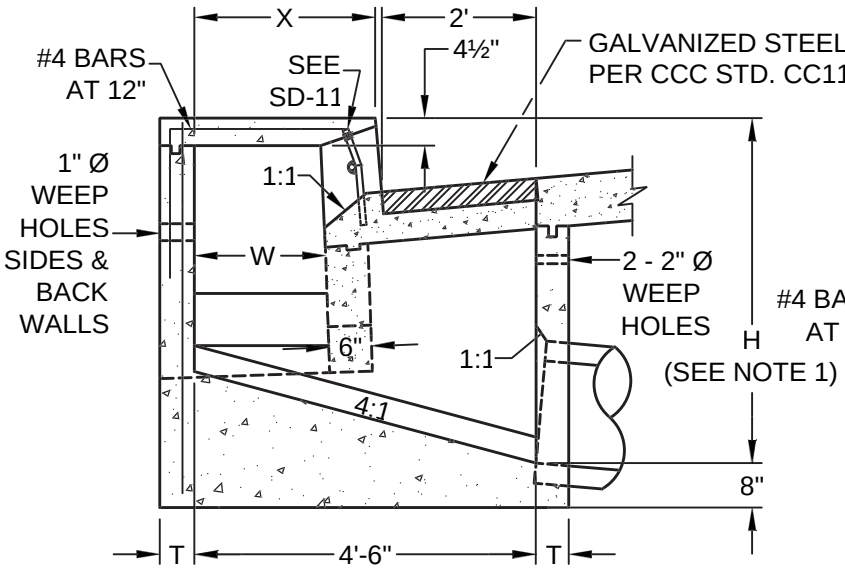

SECTION B-B

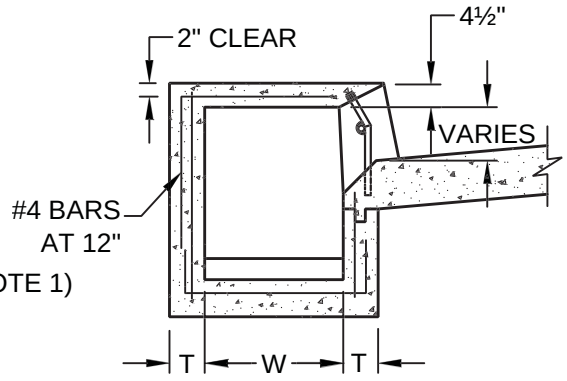

SECTION C-C

NOTES:

1. WHEN OUTLET PIPE IS CONSTRUCTED WITHIN ROADWAY, A MINIMUM OF 30" OR THE ROADWAY STRUCTURAL SECTION THICKNESS PLUS 6", WHICHEVER IS GREATER, SHALL BE MAINTAINED BETWEEN THE TOP OF THE PIPE AND THE ROADWAY SURFACE.

2. CURB OPENING SHALL CONFORM TO CURB ALIGNMENT.

3. REFER TO SD-8 FOR TYPICAL LOCAL DEPRESSION.

4. DECK INCLUDING STEEL REINFORCEMENT SHALL BE CONSTRUCTED THE SAME AS SIDEWALK (UP TO 6' WIDE).

5. THE FOLLOWING DURACAST CURB MARKER* (ITEM SDC - LG OVAL) SHALL BE INSTALLED DIRECTLY ON TOP OF THE CURB WHERE INLET IS LOCATED PER THE MANUFACTURER'S INSTRUCTIONS. IN THE ABSENCE OF A CURB WITHIN A NON-TRAFFIC AREA, IT SHALL BE INSTALLED ADJACENT TO THE INLET AS DIRECTED BY THE CITY ENGINEER'S REPRESENTATIVE.

* DURACAST MARKERS AND ADHESIVE ARE AVAILABLE FROM **REVEL ENVIRONMENTAL MANUFACTURING, INC.** , 960-B DETROIT AVENUE, CONCORD, CA 94518; PHONE (888) 526-4736; www.remfilters.com.

WITHIN TRAFFIC AREAS, THE FOLLOWING SHALL BE STENCILED USING A 2-STEP THERMOPLASTIC ADJACENT TO INLET OR AS DIRECTED BY THE CITY ENGINEER'S REPRESENTATIVE.

(Not To Scale)

PUBLIC WORKS DEPARTMENT

THE CITY OF BRENTWOOD

TYPE "A" INLET ALTERNATE I - NOTES AND SECTIONS

BALWINDER S. GREWAL CITY ENGINEER

DATE: DEC. 3, 2007

REVISED: DEC. 31, 2013

SHEET No. **SD-17b**

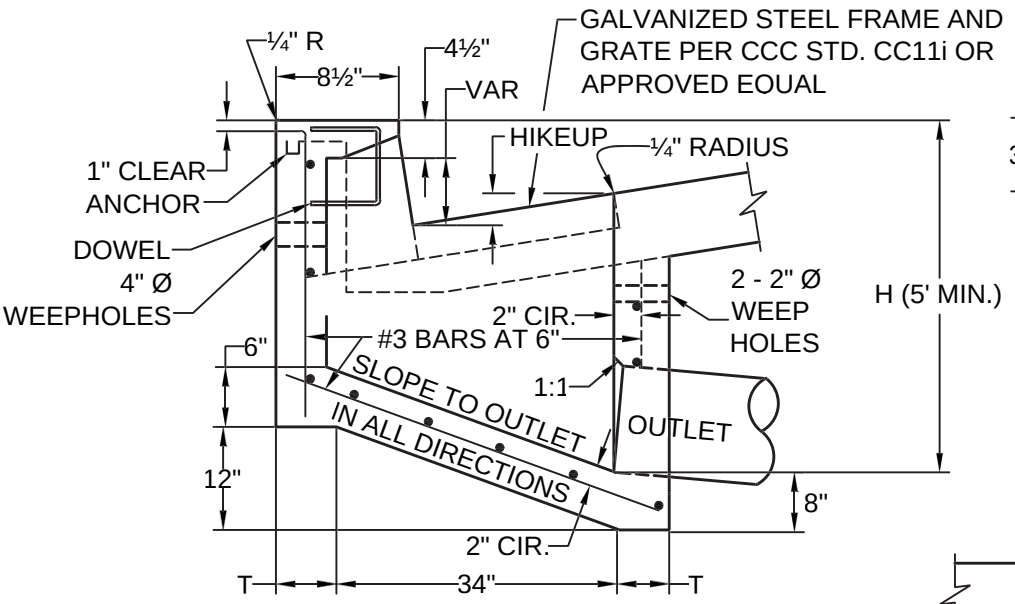

SECTION A-A

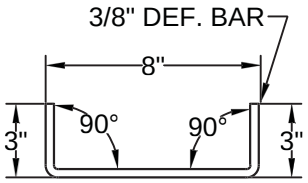

DOWEL DETAIL

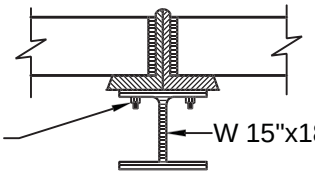

SECTION W-W

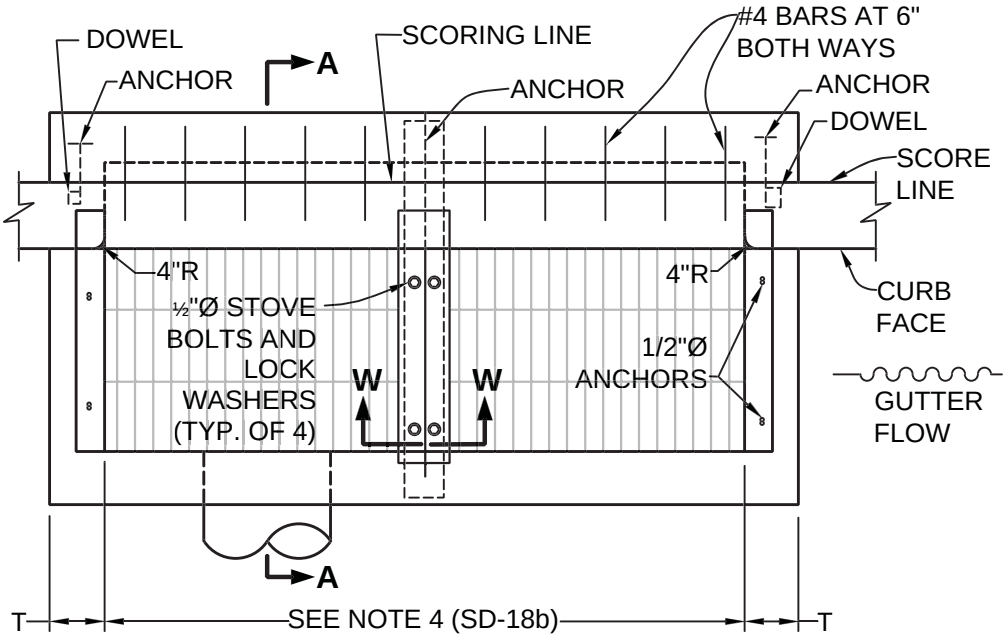

PLAN

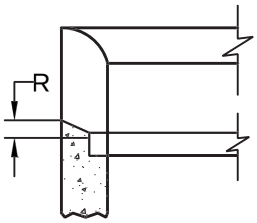

END WALL
DETAIL

(Not To Scale)

REGISTERED PROFESSIONAL ENGINEER
BALWINDER S. GREWAL
C 49122
EXP. 9/30/14
STATE OF CALIFORNIA

PUBLIC WORKS DEPARTMENT

THE CITY OF BRENTWOOD

TYPE "A" INLET ALTERNATE II

BALWINDER S. GREWAL CITY ENGINEER

DATE:	MAR. 29, 2001	SHEET No.
REVISED:	DEC. 31, 2013	**SD-18a**

NOTES:

1. BASIN SHALL HAVE ONE GRATING UNLESS OTHERWISE SPECIFIED.

2. CURB OPENING SHALL CONFORM TO CURB ALIGNMENT.

3. CURVATURE OF THE END WALL AT THE CURB OPENING SHALL BE FORMED BY CURVED FORMS AND SHALL NOT BE MADE BY PLASTERING.

4. DIMENSIONS:

   HIKE-UP SHALL BE IN SAME PLANE AS LOCAL DEPRESSION. R = ½" FOR LOWER END WALL OF A SINGLE BASIN, OR THE LOWEST BASIN OF A SERIES OF SPREAD BASINS; R = 0 FOR ALL OTHER END WALLS. L = 2'-10 7/8" FOR ONE GRATING. ADD 3'-4 7/8" FOR EACH ADDITIONAL GRATING. T=6" UNLESS H>8' THEN T=8".

5. EXPOSED SURFACES OF THE CATCH BASIN SHALL CONFORM IN SLOPE, GRADE, COLOR, FINISH AND SCORING TO EXISTING IMPROVEMENTS ADJACENT TO THE BASIN. THE TOP SHALL BE FINISHED TO CONFORM TO STANDARD SIDEWALK SLOPE AND FINISH WHERE NO SIDEWALK EXISTS.

6. OUTLET PIPE SHALL BE TRIMMED TO THE FINAL SHAPE AND LENGTH BEFORE CONCRETE IS PLACED.

7. SLOPE OF FLOOR PARALLEL WITH CURB SHALL BE 12:1 UNLESS OTHERWISE AUTHORIZED BY THE CITY ENGINEER.

8. SLOPE FLOOR FROM ALL DIRECTIONS TO THE OUTLET.

9. WHEN THE OUTLET PIPE IS CONSTRUCTED WITHIN THE ROADWAY A MINIMUM OF 2' MEASURED BELOW THE STREET SUBGRADE FROM THE TOP OF PIPE IS REQUIRED.

10. THE FOLLOWING DURACAST MARKER* (ITEM SDC - LG OVAL) SHALL BE INSTALLED DIRECTLY ON TOP OF THE CURB WHERE INLET IS LOCATED PER THE MANUFACTURER'S INSTRUCTIONS. IN THE ABSENCE OF A CURB WITHIN A NON-TRAFFIC AREA, IT SHALL BE INSTALLED ADJACENT TO THE INLET AS DIRECTED BY THE CITY ENGINEER'S REPRESENTATIVE.

* DURACAST MARKERS AND ADHESIVE ARE AVAILABLE FROM **REVEL ENVIRONMENTAL MANUFACTURING, INC.** , 960-B DETROIT AVENUE, CONCORD, CA 94518; PHONE (888) 526-4736; www.remfilters.com.

WITHIN TRAFFIC AREAS, THE FOLLOWING SHALL BE STENCILED USING A 2-STEP THERMOPLASTIC ADJACENT TO INLET OR AS DIRECTED BY THE CITY ENGINEER'S REPRESENTATIVE.

(Not To Scale)

PUBLIC WORKS DEPARTMENT

THE CITY OF BRENTWOOD

TYPE "A" INLET ALTERNATE II - NOTES

BALWINDER S. GREWAL CITY ENGINEER

DATE:	DEC. 3, 2007	SHEET No.
REVISED:	DEC. 31, 2013	SD-18b

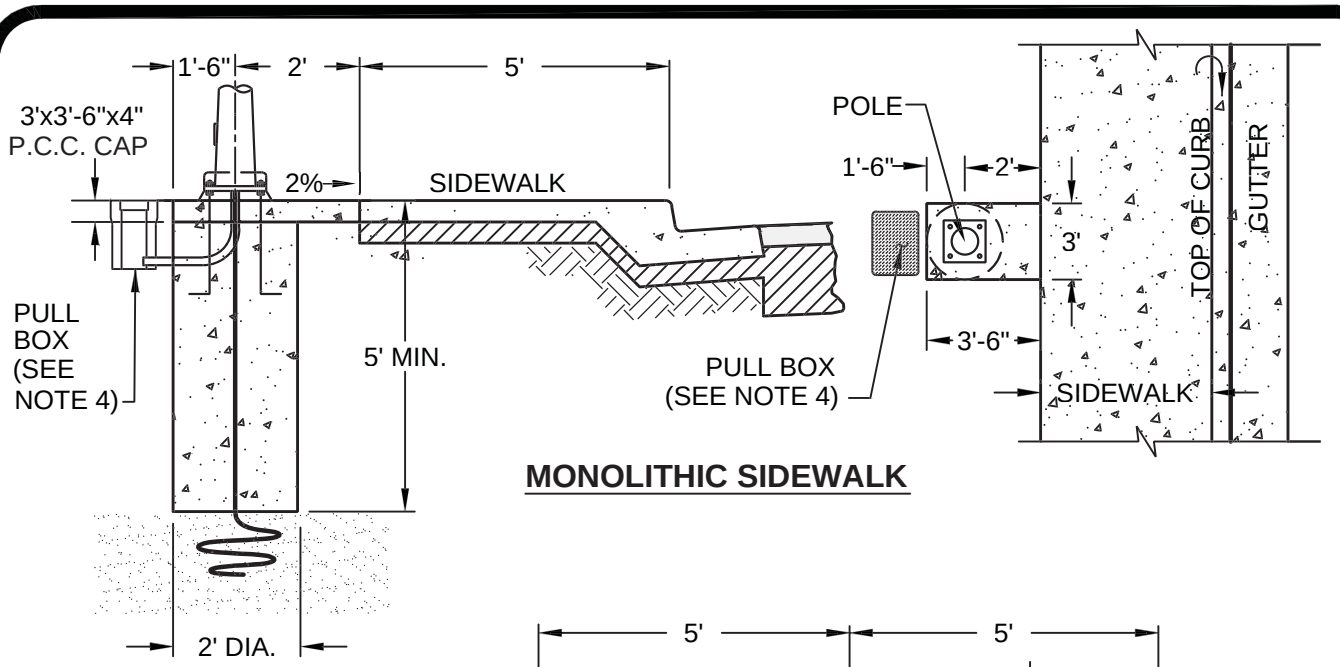

MONOLITHIC SIDEWALK

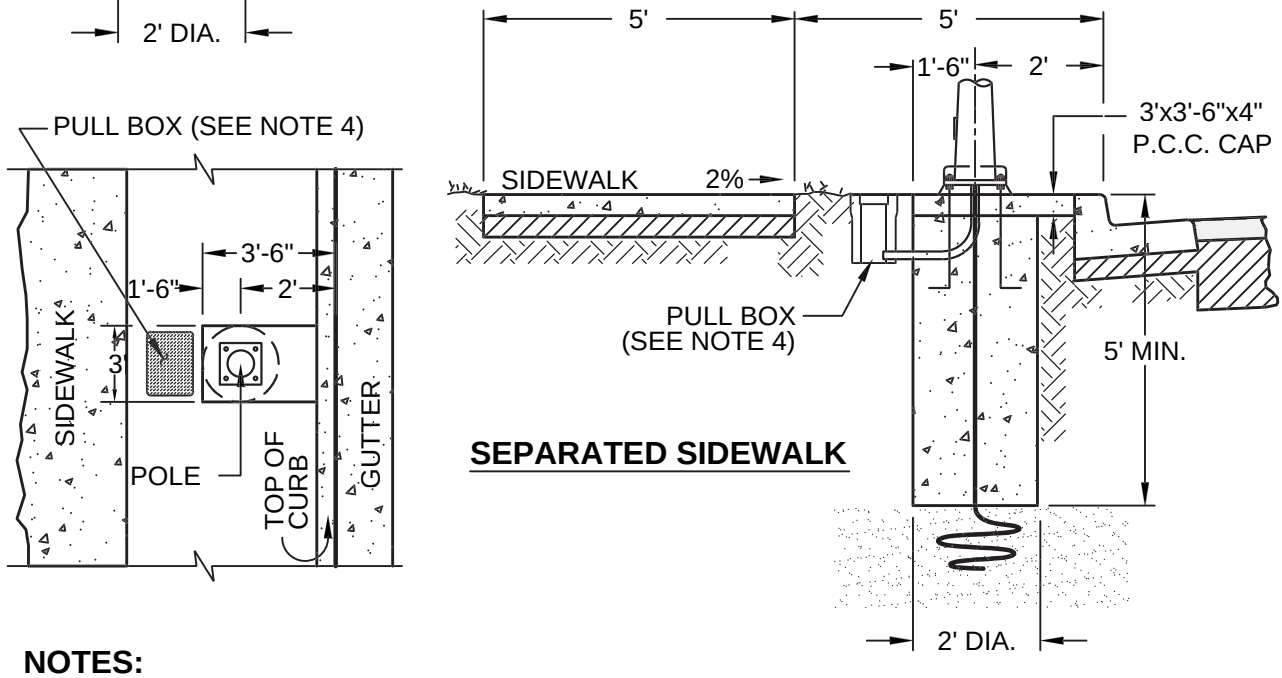

SEPARATED SIDEWALK

NOTES:

1. SECURE ELECTROLIER TO GROUNDED STUD.
2. 15'-#6 BARE COPPER WIRE GROUND WIRE OR 5/8" x 10' COPPER WELD GROUND ROD SHALL BE COVERED WITH 2" OF SOIL PRIOR TO POURING BASE.
3. BASE SHALL BE CLASS "B" CONCRETE FIELD CAST 4500 P.S.I. MINIMUM.
4. STREET LIGHT PULL BOX TO HAVE LOCKJAW SECURITY LID BY SIPRA CORP. OR APPROVED EQUAL.

(Not To Scale)

REGISTERED PROFESSIONAL ENGINEER
BALWINDER S. GREWAL
C 49122
EXP. 9/30/14
STATE OF CALIFORNIA

PUBLIC WORKS DEPARTMENT

THE CITY OF BRENTWOOD

STREET LIGHT FOUNDATION

BALWINDER S. GREWAL CITY ENGINEER

DATE:	JUNE 20, 2003	SHEET No.
REVISED:	DEC. 31, 2013	SL-1

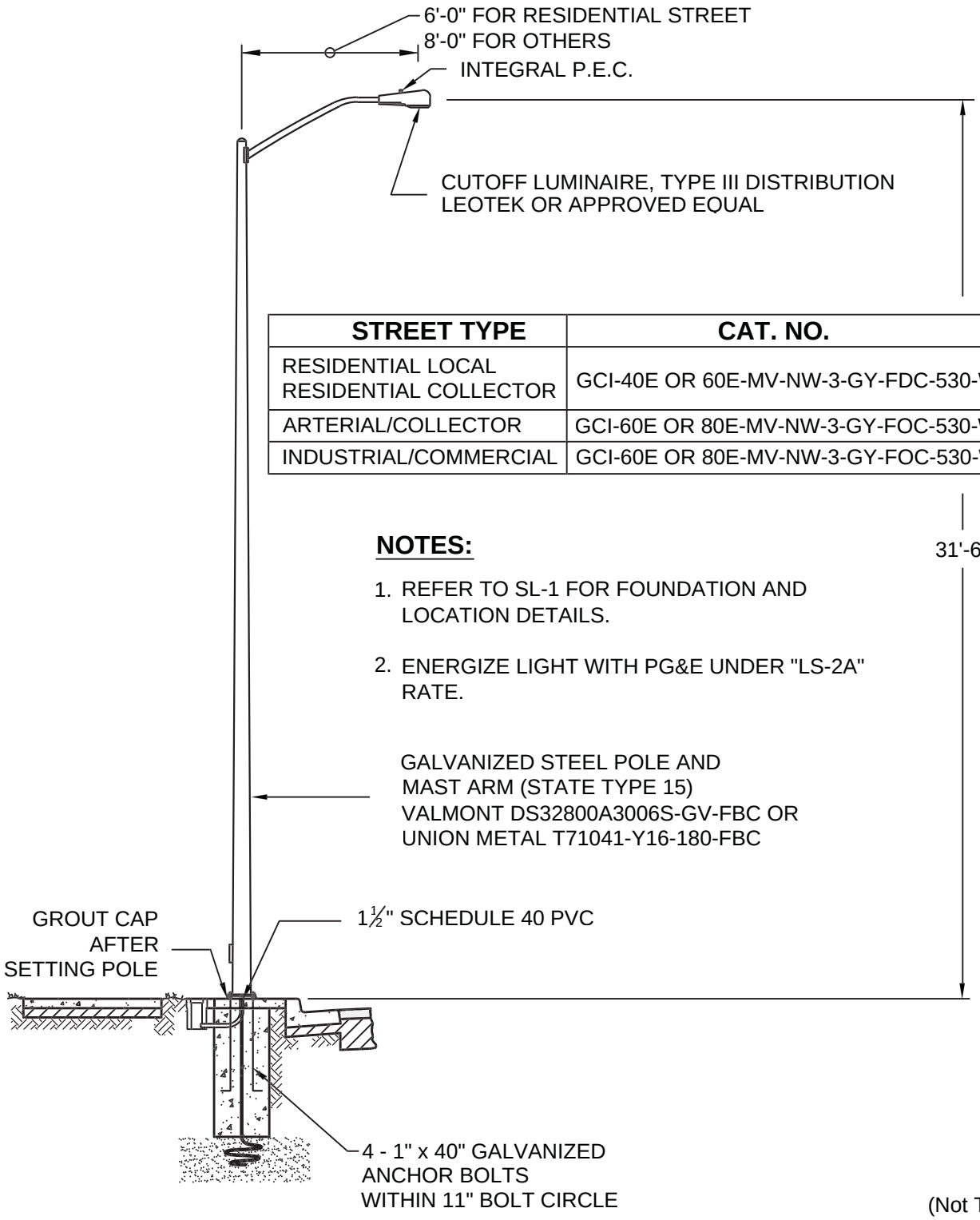

STREET TYPE	CAT. NO.
RESIDENTIAL LOCAL RESIDENTIAL COLLECTOR	GCI-40E OR 60E-MV-NW-3-GY-FDC-530-WL
ARTERIAL/COLLECTOR	GCI-60E OR 80E-MV-NW-3-GY-FOC-530-WL
INDUSTRIAL/COMMERCIAL	GCI-60E OR 80E-MV-NW-3-GY-FOC-530-WL

NOTES:

1. REFER TO SL-1 FOR FOUNDATION AND LOCATION DETAILS.
2. ENERGIZE LIGHT WITH PG&E UNDER "LS-2A" RATE.

(Not To Scale)

REGISTERED PROFESSIONAL ENGINEER
BALWINDER S. GREWAL
C 49122
EXP. 9/30/14
STATE OF CALIFORNIA

PUBLIC WORKS DEPARTMENT

THE CITY OF BRENTWOOD

STANDARD STREET LIGHT

BALWINDER S. GREWAL CITY ENGINEER

DATE: JULY 17, 2007

REVISED: DEC. 31, 2013

SHEET No.
SL-2

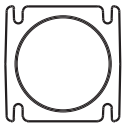

ACCESS DOOR

14" DIA. BOLT CIRCLE
4 HOLES - 90° APART
BASE WIDTH: 12 3/4" SQ.
BASE COVER: 14" SQ.

DETAIL A-A (BASE)

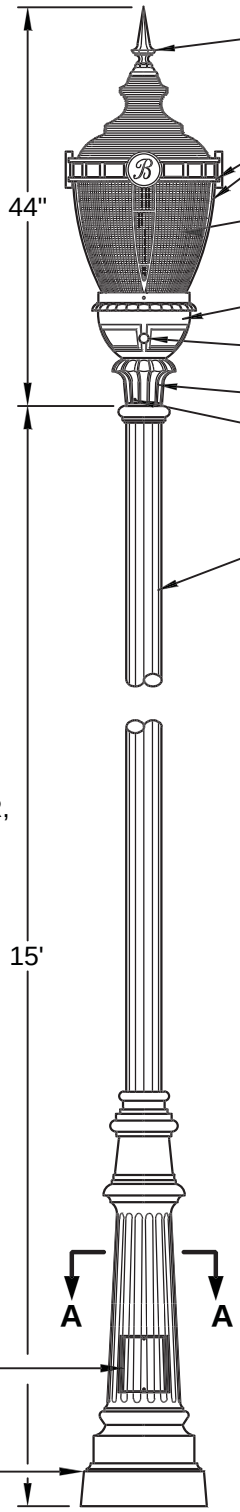

CAST ALUMINUM FINIAL
FINISH: GOLD

CAST ALUMINUM TRIM RING, CAGE, AND MEDALLION (LETTER "B")
FINISH: GOLD

PRISMATIC, ACRYLIC REFRACTOR GLOBE

CAST ALUMINUM POD
FINISH: A-BLACK

NEMA TWIST LOCK PHOTOCELL

3" I.D. SLIP FITTER

STAINLESS STEEL FASTENERS

4" FLUTED TUBING
FINISH: A-BLACK

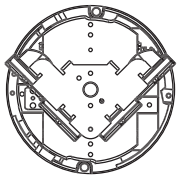

TOP VIEW

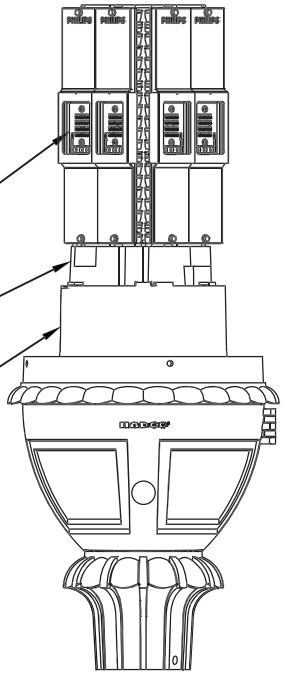

LED MODULE:
TYPE III LUMILOCK,
IP66 RATED

DRIVER COVER:
DIE-CAST ALUMINUM
W/ TOOL-LESS ENTRY

CAMDEN ADAPTOR:
DIE-CAST ALUMINUM

LUMILOCK LED DETAIL

NOTES:

1. LIGHT AS MANUFACTURED BY HADCO (FILE NO. C7259A) OR APPROVED EQUAL.
2. REFER TO SL-1 FOR FOUNDATION AND LOCATION DETAILS.
3. PLACE STREET LIGHT NUMBER, 2" HIGH NUMBERS, ON BASE OF POLE FACING STREET.
4. ON SUBDIVISION ENTRY LANDSCAPE MEDIANS, USE TWIN DECORATIVE LIGHT APPROVED BY THE CITY ENGINEER.
5. ENERGIZE LIGHT WITH PG&E UNDER "LS-2A" RATE.
6. POLE AS MANUFACTURED BY HADCO #SP6361.

LUMILOCK LED SPECIFICATIONS:

- 80, 4000K (NEUTRAL) PHILIPS LUMILEDS REBEL ES LED'S, TYPICAL 70 COLOR RENDERING INDEX (CRI), >60,000 HOURS OF OPERATIONAL LIFE (AT 25°C AMBIENT TEMPERATURE & 70% LUMEN MAINTENANCE), ALUMINUM CORE PCB, SEALED GLASS LENS, IP66 RATED, TYPE III LIGHT DISTRIBUTION.
- INTEGRAL PHILIPS ADVANCE XITANIUM LED DRIVER, CLASS 1, IP66 RATED, 350MA, INTELLIVOLT 120-277 VAC, 50-60HZ, ROHS COMPLIANT, FIELD ADJUSTABLE 10KV/10KA SURGE SUPRESSION.

(Not To Scale)

REGISTERED PROFESSIONAL ENGINEER
BALWINDER S. GREWAL
C 49122
EXP. 9/30/14
STATE OF CALIFORNIA

PUBLIC WORKS DEPARTMENT

THE CITY OF BRENTWOOD

RESIDENTIAL DECORATIVE STREET LIGHT

BALWINDER S. GREWAL — CITY ENGINEER

DATE: JUL. 26, 2002
REVISED: DEC. 31, 2013

SHEET No.
SL-3

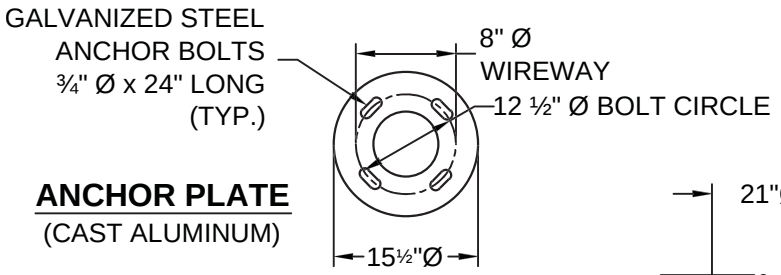

ANCHOR PLATE
(CAST ALUMINUM)

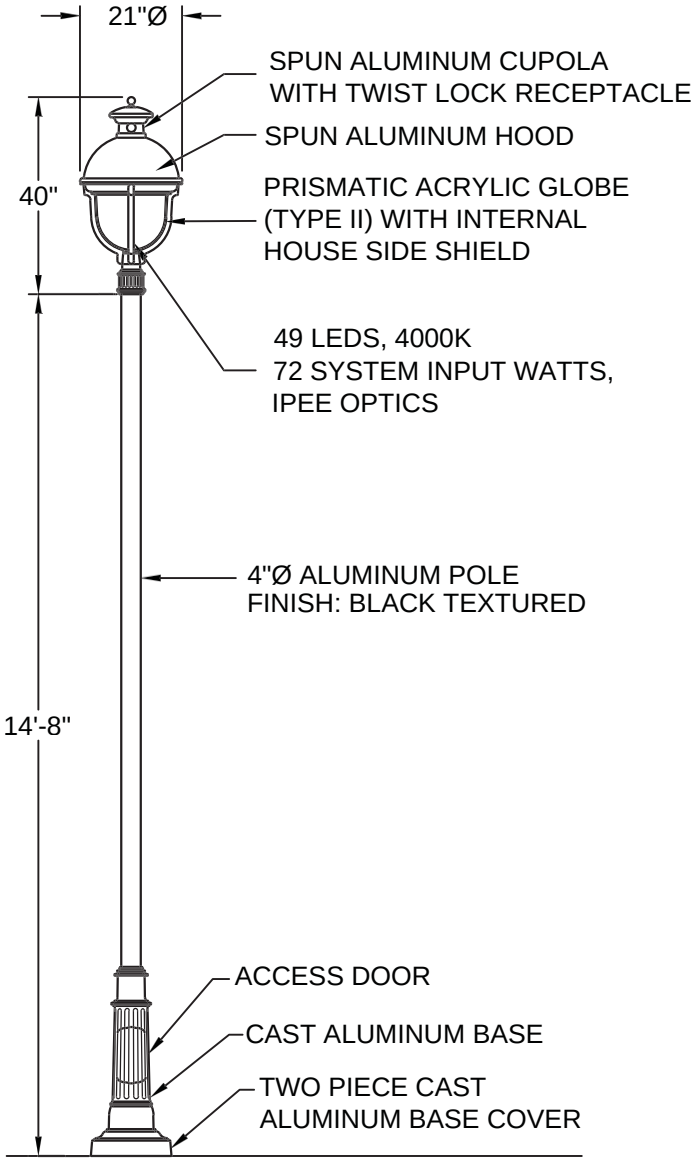

NOTES:

1. LIGHT AS MANUFACTURED BY ATIO - 65W49LED4K-ES-ACDR-LE2A-120-HS-RC-BKTX WITH R80F-15-TBC1-BKTX.
2. REFER TO STANDARD PLAN SL-1 FOR FOUNDATION AND LOCATION DETAILS.
3. PLACE STREET LIGHT NUMBER (2" CHARACTER HEIGHT) ON BASE OF POLE FACING STREET.
4. HOUSE SIDE (GLARE) SHIELD SHALL BE PROVIDED.
5. THE USE OF THIS ALTERNATE RESIDENTIAL DECORATIVE STREET LIGHT MUST BE APPROVED BY THE CITY ENGINEER.
6. ANY CHANGE IN SPECIFIED COLOR OF STREET LIGHT MUST BE APPROVED BY THE CITY ENGINEER.
7. ON SUBDIVISION ENTRY LANDSCAPE MEDIANS, USE THE TWIN DECORATIVE LIGHT APPROVED BY THE CITY ENGINEER.
8. ENERGIZE LIGHT WITH PG&E UNDER "LS-2A" RATE.

(Not To Scale)

PUBLIC WORKS DEPARTMENT

THE CITY OF BRENTWOOD

ALTERNATE RESIDENTIAL DECORATIVE STREET LIGHT

BALWINDER S. GREWAL	CITY ENGINEER	DATE: JUL. 26, 2002 REVISED: DEC. 31, 2013	SHEET No. **SL-4**

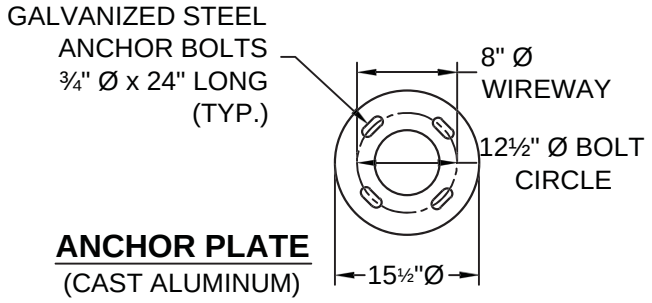

ANCHOR PLATE
(CAST ALUMINUM)

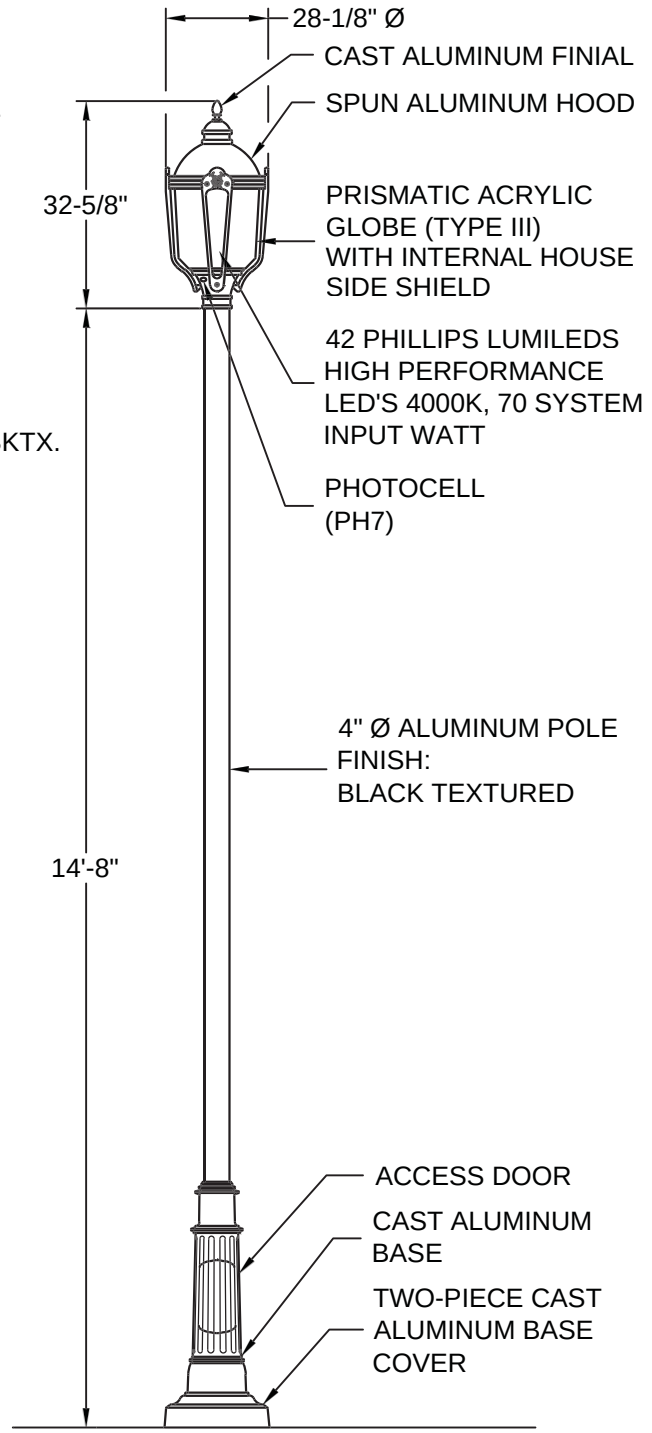

(Not To Scale)

NOTES:

1. LIGHT IS MANUFACTURED BY LUMEC CAT. NO. Z40-65W42LED4K-R-AC-RLE3-120-SF24-HS-PH7-BKTX.
2. REFER TO STANDARD PLAN SL-1 FOR FOUNDATION AND LOCATION DETAILS.
3. PLACE STREET LIGHT NUMBER (2" CHARACTER HEIGHT) ON BASE OF POLE FACING STREET.
4. HOUSE SIDE (GLARE) SHIELD SHALL BE PROVIDED.
5. THE USE OF THIS ALTERNATIVE COMMERCIAL / INDUSTRIAL DECORATIVE STREET LIGHT MUST BE APPROVED BY THE CITY ENGINEER.
6. ANY CHANGE IN SPECIFIED COLOR OF STREET LIGHT MUST BE APPROVED BY THE CITY ENGINEER.
7. ON SUBDIVISION ENTRY LANDSCAPE MEDIANS, USE THE TWIN DECORATIVE LIGHT APPROVED BY THE CITY ENGINEER.
8. ENERGIZE LIGHT WITH PG&E UNDER "LS-2A" RATE.

PUBLIC WORKS DEPARTMENT

THE CITY OF BRENTWOOD

COMMERCIAL/INDUSTRIAL DECORATIVE STREET LIGHT

BALWINDER S. GREWAL CITY ENGINEER

DATE:	JUL. 26, 2002	SHEET No.
REVISED:	DEC. 31, 2013	SL-5

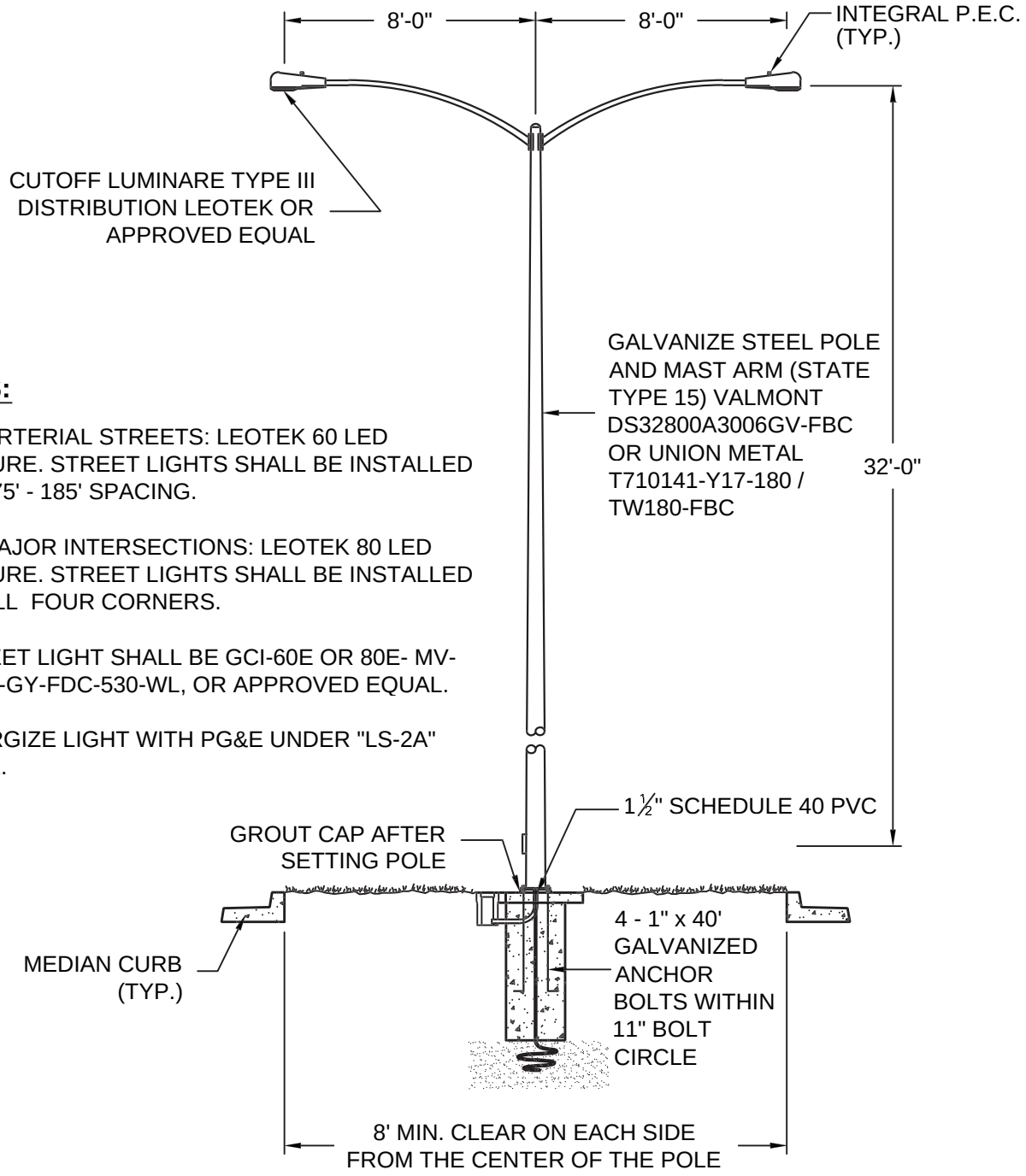

NOTES:

1. ON ARTERIAL STREETS: LEOTEK 60 LED FIXTURE. STREET LIGHTS SHALL BE INSTALLED AT 175' - 185' SPACING.
2. AT MAJOR INTERSECTIONS: LEOTEK 80 LED FIXTURE. STREET LIGHTS SHALL BE INSTALLED AT ALL FOUR CORNERS.
3. STREET LIGHT SHALL BE GCI-60E OR 80E- MV-NW-3-GY-FDC-530-WL, OR APPROVED EQUAL.
4. ENERGIZE LIGHT WITH PG&E UNDER "LS-2A" RATE.

(Not To Scale)

REGISTERED PROFESSIONAL ENGINEER
BALWINDER S. GREWAL
C 49122
EXP. 9/30/14
STATE OF CALIFORNIA

PUBLIC WORKS DEPARTMENT

THE CITY OF BRENTWOOD

ARTERIAL STREET LIGHT

BALWINDER S. GREWAL CITY ENGINEER

DATE:	JULY 17, 2007	SHEET No.
REVISED:	DEC. 31, 2013	SL-6

This page is left intentionally blank

THE CITY OF BRENTWOOD

(Not To Scale)

REGISTERED PROFESSIONAL ENGINEER
BALWINDER S. GREWAL
C 49122
EXP. 9/30/14
STATE OF CALIFORNIA

PUBLIC WORKS DEPARTMENT

THE CITY OF BRENTWOOD

BALWINDER S. GREWAL CITY ENGINEER

DATE:

REVISED:

SHEET No.

SL-7

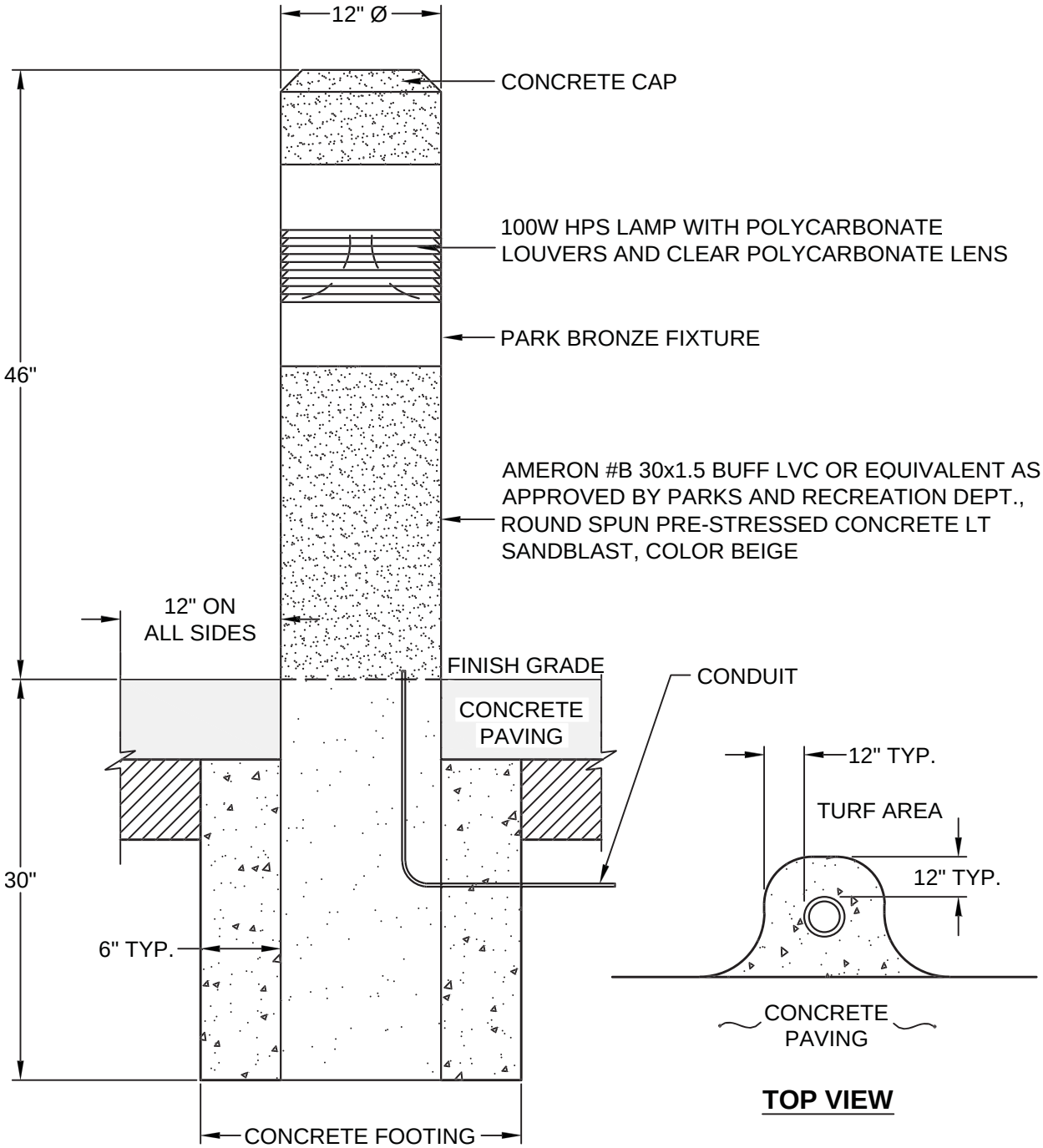

(Not To Scale)

REGISTERED PROFESSIONAL ENGINEER
BALWINDER S. GREWAL
C 49122
EXP. 9/30/14
STATE OF CALIFORNIA

PUBLIC WORKS DEPARTMENT

THE CITY OF BRENTWOOD

BOLLARD LIGHT

BALWINDER S. GREWAL CITY ENGINEER

DATE:	APR. 29, 2005
REVISED:	DEC. 31, 2013

SHEET No.
SL-8

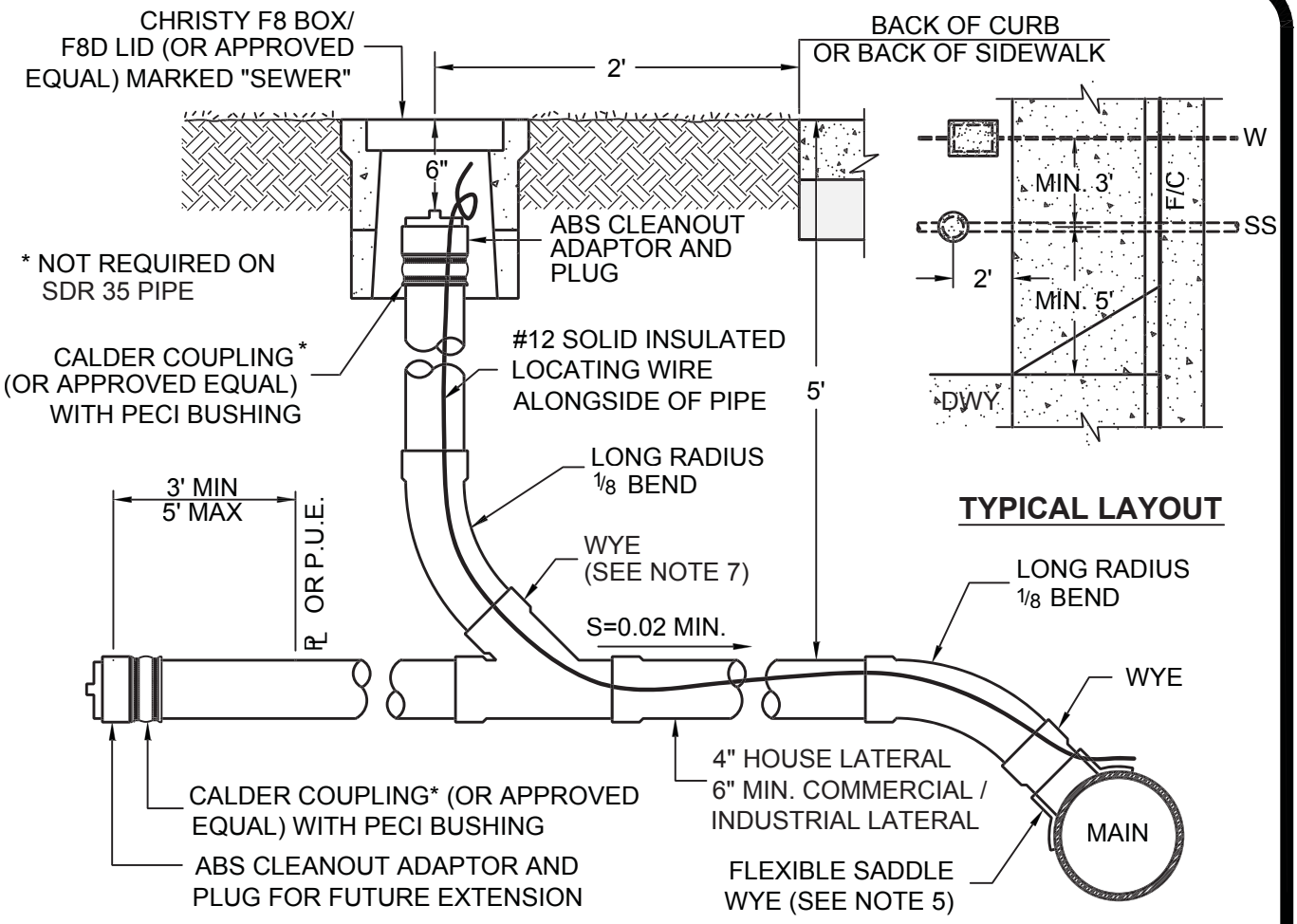

NOTES:

1. SEWER SERVICE SHALL BE SDR 35, VITRIFIED CLAY PIPE, OR DUCTILE IRON PIPE.
2. ALL CLEANOUT PIPES AND FITTINGS SHALL BE THE SAME SIZE AND MATERIAL AS THE LATERAL SEWER TO WHICH THEY CONNECT.
3. SEWER SERVICE EXTENSION TO BUILDING SHALL HAVE THE SAME BEDDING AND BACKFILL MATERIAL AS SEWER SERVICE.
4. SEWER LATERALS SHALL CLEAR UNDERGROUND UTILITIES OR OBSTRUCTIONS A MINIMUM OF 6" AND SHALL BE INSTALLED 12" MIN. BELOW UTILITY WATER LINES.
5. WHEN TAPPING TO MAIN, USE DFW PLASTICS, INC. 5Y/C FLEXIBLE SADDLE WYE WITH STAINLESS STEEL CLAMPS OR APPROVED EQUAL.
6. COMPACTION AROUND THE CLEANOUT SHALL BE 95%.
7. A 4"x 4"x 4" WYE SHALL BE USED ON RESIDENTIAL AND A 6"x 6"x 6" MIN. SHALL BE USED FOR COMMERCIAL/INDUSTRIAL SERVICES.

(Not To Scale)

REGISTERED PROFESSIONAL ENGINEER
BALWINDER S. GREWAL
C 49122
EXP. 9/30/14
STATE OF CALIFORNIA

PUBLIC WORKS DEPARTMENT

THE CITY OF BRENTWOOD

STANDARD SEWER SERVICE

BALWINDER S. GREWAL CITY ENGINEER

DATE:	JULY 31, 2003	SHEET No.
REVISED:	DEC. 31, 2013	SS-1

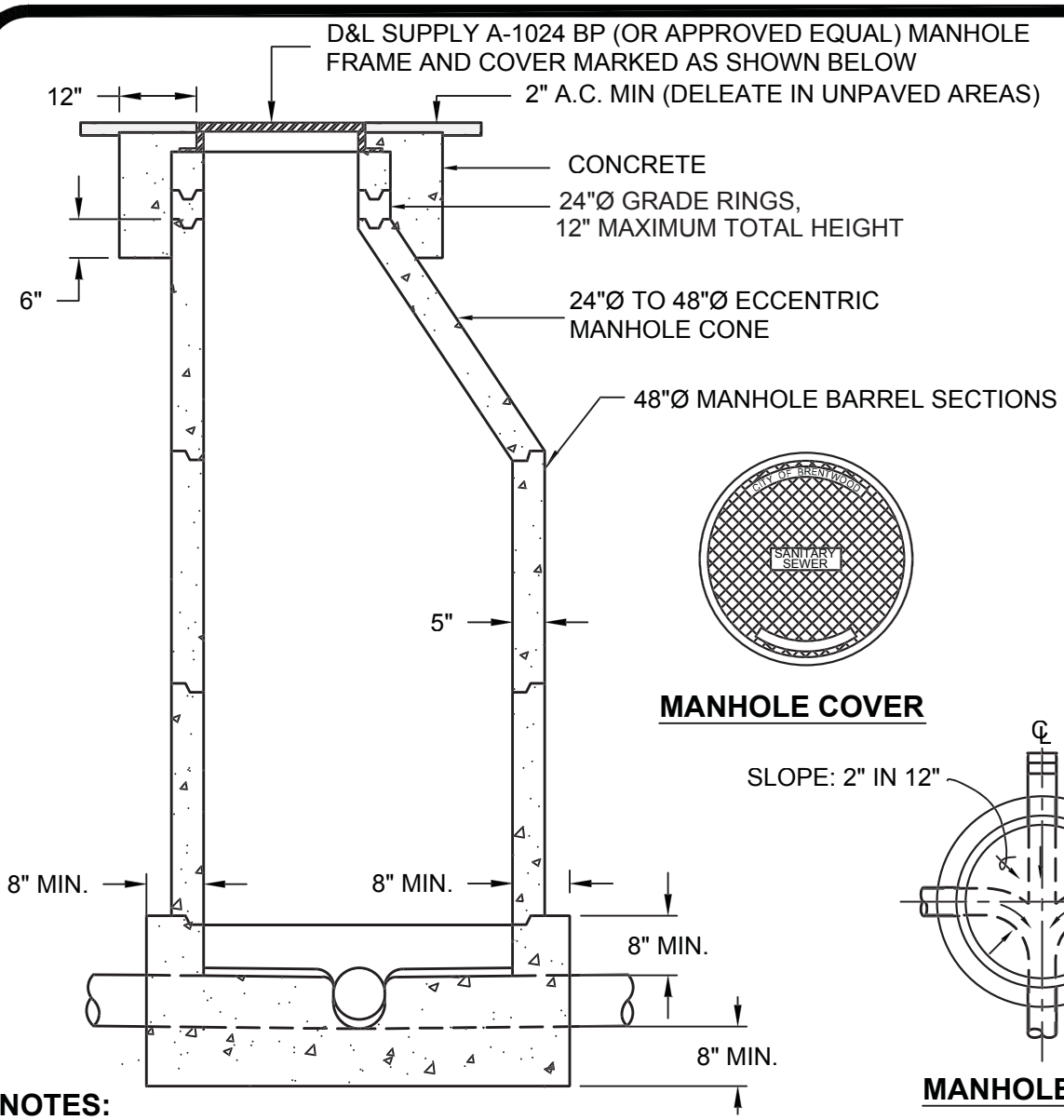

MANHOLE COVER

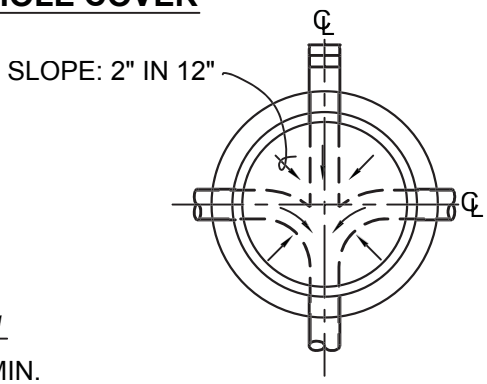

MANHOLE BASE

NOTES:

1. FOR PIPES UP TO 21" IN DIAMETER; SEE SS-3 FOR SEWER LINE 20' OR DEEPER.
2. FORM BASE TO PROVIDE A SMOOTH FLOW CHANNEL.
3. ALL CONCRETE TO BE CLASS A, 3000 P.S.I. MIN.
4. 1:3 GROUT MIX OR 3" RAM-NEK JOINT COMPOUND (OR APPROVED EQUAL) IN ALL JOINTS INSIDE AND OUT.
5. ALL MANHOLES SHALL BE VACUUM TESTED PER CITY SPECIFICATIONS.
6. MANHOLE BASE SHALL EXTEND 18" OUTSIDE BARREL WHEN CONSTRUCTED IN SAND.
7. BACKFILL AROUND MANHOLE SHALL BE CLASS II A.B. COMPACTED TO 95%.
8. NEW MANHOLE WITH SEWER MAIN ≥ 10" DIA. SHALL BE EPOXY COATED WITH MADEWELL MAINSTAY DS-5 OR APPROVED EQUAL.
9. INTERCEPTOR MANHOLES ON EXISTING SEWER MAINS OR TRUNK LINES SHALL BE EPOXY COATED IRRESPECTIVE OF SEWER MAIN SIZE.

(Not To Scale)

PUBLIC WORKS DEPARTMENT

THE CITY OF BRENTWOOD

SANITARY SEWER MANHOLE

BALWINDER S. GREWAL CITY ENGINEER

DATE:	OCT. 31, 2000	SHEET No.
REVISED:	DEC. 31, 2013	SS-2

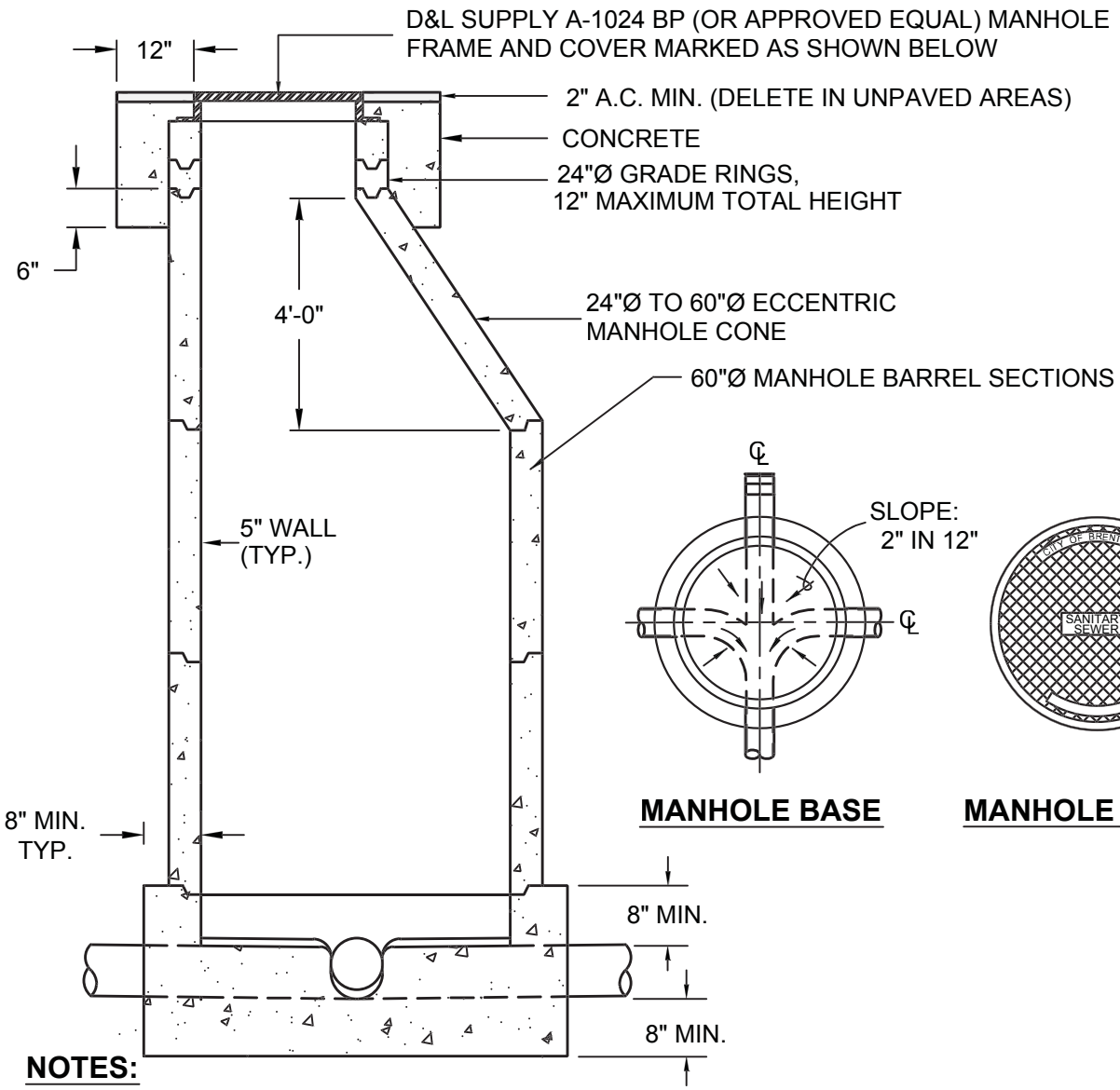

NOTES:

1. FOR PIPES LARGER THAN 21" IN DIAMETER AND WHERE SEWER LINE IS 20' OR MORE IN DEPTH.
2. FORM BASE TO PROVIDE A SMOOTH FLOW CHANNEL.
3. ALL CONCRETE TO BE CLASS A, 3000 P.S.I. MIN.
4. 1:3 GROUT MIX OR 3" RAM-NEK JOINT COMPOUND (OR APPROVED EQUAL) IN ALL JOINTS, INSIDE AND OUT.
5. ALL MANHOLES SHALL BE VACUUM TESTED PER CITY SPECIFICATIONS.
6. BACKFILL AROUND MANHOLE SHALL BE CLASS II A.B. COMPACTED TO 95%.
7. SEWER MANHOLE SHALL BE EPOXY COATED WITH MADEWELL MAINSTAY DS-5 OR APPROVED EQUAL.

(Not To Scale)

REGISTERED PROFESSIONAL ENGINEER
BALWINDER S. GREWAL
C 49122
EXP. 9/30/14
STATE OF CALIFORNIA

PUBLIC WORKS DEPARTMENT

THE CITY OF BRENTWOOD

LARGE SANITARY SEWER MANHOLE

BALWINDER S. GREWAL CITY ENGINEER

DATE:	OCT. 31, 2000	SHEET No.
REVISED:	DEC. 31, 2013	SS-3

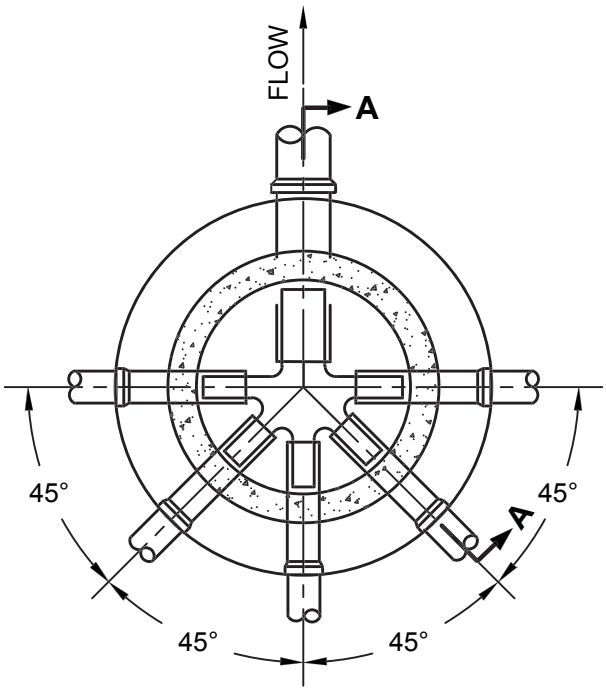

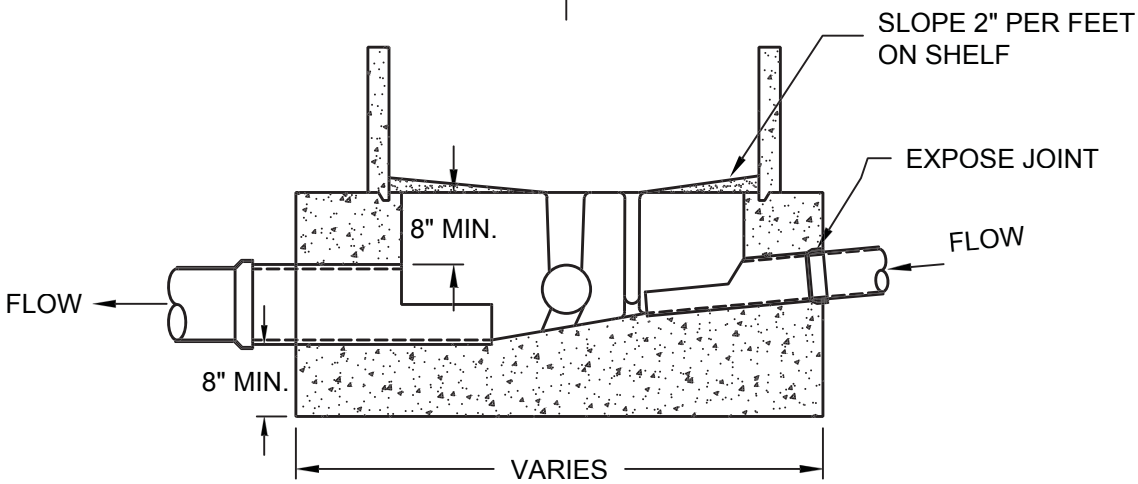

SECTION A-A

NOTES:

1. NO SIDE SEWER CONNECTIONS SHALL BE MADE IN DOWNSTREAM HALF OF THE MANHOLE.
2. MAXIMUM NUMBER OF SIDE SEWERS ALLOWED PER MANHOLE = 5.
3. TOP OF SIDE SEWERS SHALL MATCH TOP OF OUTLET PIPE.

(Not To Scale)

REGISTERED PROFESSIONAL ENGINEER
BALWINDER S. GREWAL
C 49122
EXP. 9/30/14
STATE OF CALIFORNIA

PUBLIC WORKS DEPARTMENT

THE CITY OF BRENTWOOD

SANITARY TERMINAL MANHOLE BASE

BALWINDER S. GREWAL CITY ENGINEER

DATE: MAY 28, 1999

REVISED: DEC. 31, 2013

SHEET No.

SS-4

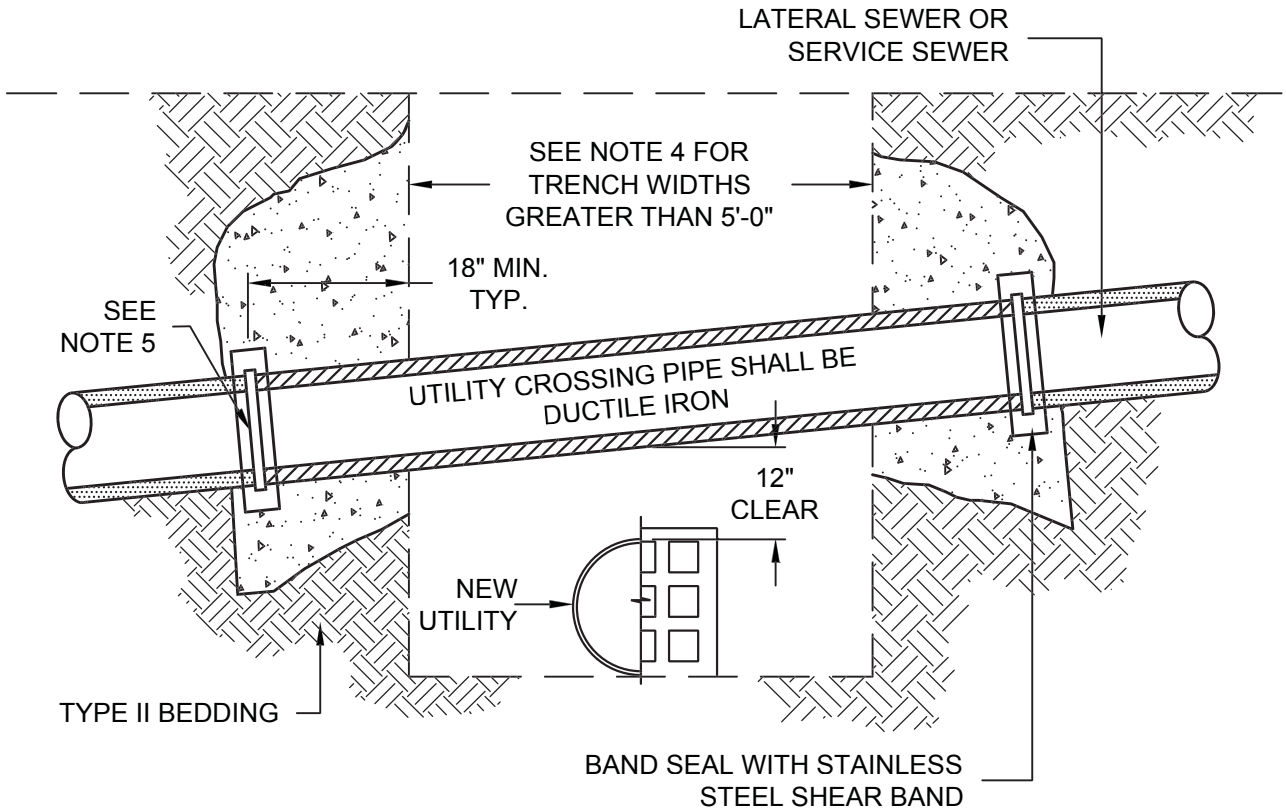

NOTES:

1. THIS DETAIL SHALL APPLY WHENEVER THE LATERAL OR SERVICE SEWER IS CUT OR DAMAGED OR WHENEVER CONSTRUCTION PASSES BENEATH THE LATERAL OR SERVICE SEWER.
2. THE INSIDE DIAMETER OF UTILITY CROSSING PIPE SHALL BE THE SAME AS THE PIPE TO WHICH IT CONNECTS.
3. ALTERATION OF SEWER GRADES WILL BE PERMITTED ONLY AFTER WRITTEN PERMISSION HAS BEEN RECEIVED FROM THE CITY OF BRENTWOOD ENGINEERING DEPARTMENT.
4. WHENEVER THE SPAN, WHETHER CAUSED BY TRENCH WIDTH OR CROSSING ANGLE OF UTILITY PIPE EXCEEDS 5'-0", THE BEDDING MATERIAL SHALL BE PLACED TO 6" ABOVE THE PIPE AND 18" ON EACH SIDE OF ITS CENTER LINE.
5. SIDE OF SEWER PIPE SHALL BE TRIMMED TO A CLEAN CUT UNDAMAGED END WITH A MECHANICAL PIPE CUTTER.

(Not To Scale)

REGISTERED PROFESSIONAL ENGINEER
BALWINDER S. GREWAL
C 49122
EXP. 9/30/14
STATE OF CALIFORNIA

PUBLIC WORKS DEPARTMENT

THE CITY OF BRENTWOOD

UTILITY CROSSING

BALWINDER S. GREWAL CITY ENGINEER

DATE: MAY 28, 1999

REVISED: DEC. 31, 2013

SHEET No.
SS-5

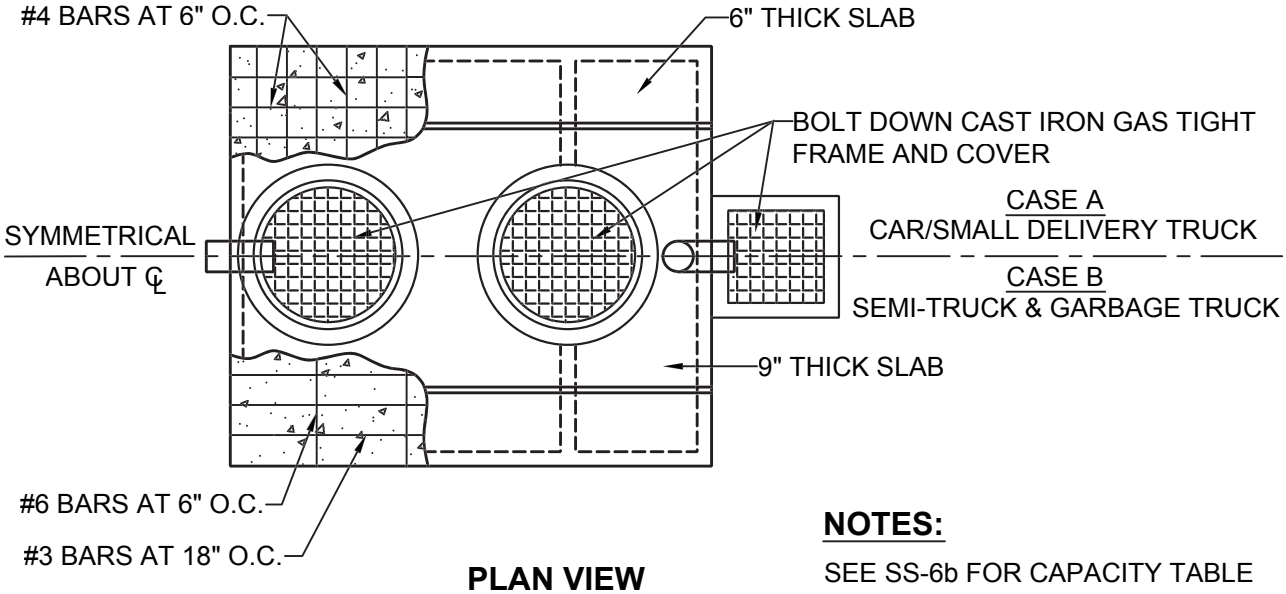

PLAN VIEW

NOTES:

SEE SS-6b FOR CAPACITY TABLE AND DETAILS.

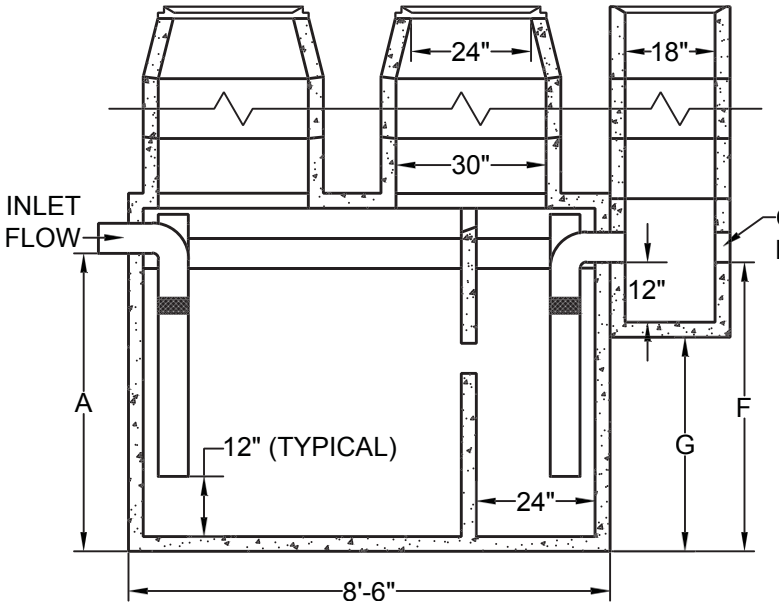

LONGITUDINAL SECTION

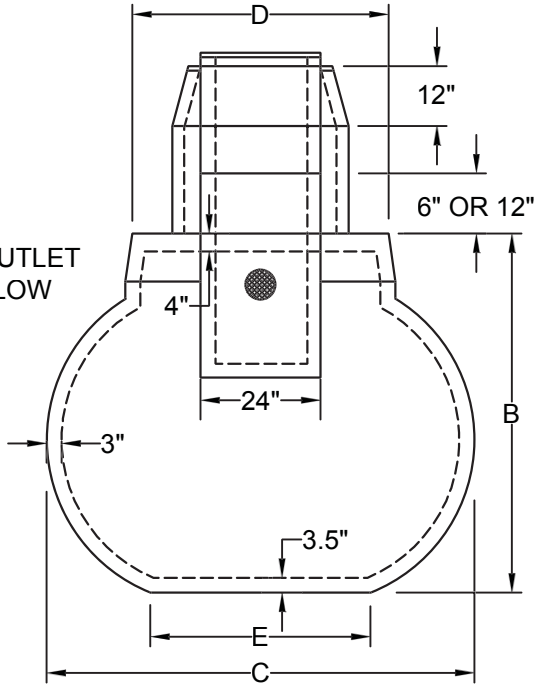

END VIEW

(Not To Scale)

REGISTERED PROFESSIONAL ENGINEER
BALWINDER S. GREWAL
C 49122
EXP. 9/30/14
STATE OF CALIFORNIA

PUBLIC WORKS DEPARTMENT

THE CITY OF BRENTWOOD

GREASE INTERCEPTOR DETAILS

BALWINDER S. GREWAL CITY ENGINEER

DATE:	MAR. 14, 2001	SHEET No.
REVISED:	DEC. 31, 2013	SS-6a

NOTES:

1. EXTEND CONCRETE SLAB 1' PAST EXCAVATION IN ALL DIRECTIONS.
2. MATERIAL SPECIFICATIONS: (A) CONCRETE, PORTLAND CEMENT TYPE II MINIMUM COMPRESSIVE STRENGTH 3000 P.S.I. AT 28 DAYS; (B) REINFORCING BAR INTERMEDIATE GRADE ASTM A615; (C) REINFORCING WELDED WIRE MESH ASTM A185.
3. INTERCEPTOR SHALL BE COATED INSIDE WITH HUNTS PROCESS BLACK NO. 120 ASTM C-309. TYPE IV-ASTM D-41-FHA REQUIREMENTS.
4. PRECAST UNIT SHALL BE PLACED ON NATURAL SOIL OR APPROVED COMPACTED FILL.
5. STANDARD GROUND WATER SEAL SHALL BE BUTYL ROPE MASTIC OR APPROVED COMPACTED FILL.
6. THIS GREASE INTERCEPTOR IS NOT INTENDED FOR THE INTRODUCTION OF DOMESTIC SEWAGE. LOCATION AND TRIBUTARY DISCHARGE SOURCES SHALL BE APPROVED BY THE CITY ENGINEER PRIOR TO INSTALLATION.
7. GREASE INTERCEPTORS LOCATED IN AREA SUBJECT TO TRAFFIC MUST BE INSTALLED WITH TRAFFIC COVER.
8. ALL PIPE SIZES MUST BE 6" MIN. OR AS SPECIFIED ON THE DRAWINGS.

CAPACITY IN GALLONS	A	B	C	D	E	F	G
750	3'-10"	5'-0"	3'-4"	3'-10"	3'-6"	3'-8"	2'-5"
1,000	4'-4"	5'-4"	5'-11"	4'-3"	4'-1"	4'-2"	2'-11"
1,200	5'-0"	6'-0"	6'-11"	4'-3"	3'-11"	4'-10"	3'-7"
1,500	5'-0"	6'-0"	6'-11"	5'-3"	4'-11"	4'-10"	3'-7"

EXCAVATION SPECIFICATIONS			
CAPACITY IN GALLONS	DEPTH BELOW INLET	LENGTH	WIDTH
750	3'-10"	11"-0"	6'-4"
1,000	4'-4"	11'-0"	7'-0"
1,200	5'-0"	11'-0"	7'-0"
1,500	5'-0"	11'-0"	8'-0"

(Not To Scale)

PUBLIC WORKS DEPARTMENT

GREASE INTERCEPTOR NOTES

BALWINDER S. GREWAL CITY ENGINEER

DATE: MAR. 30, 2001

REVISED: DEC. 31, 2013

SHEET No. SS-6b

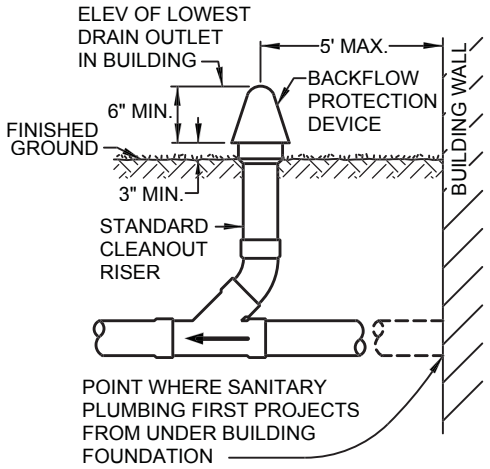

BACKFLOW PROTECTION/ OVERFLOW SYSTEM TYPE 1

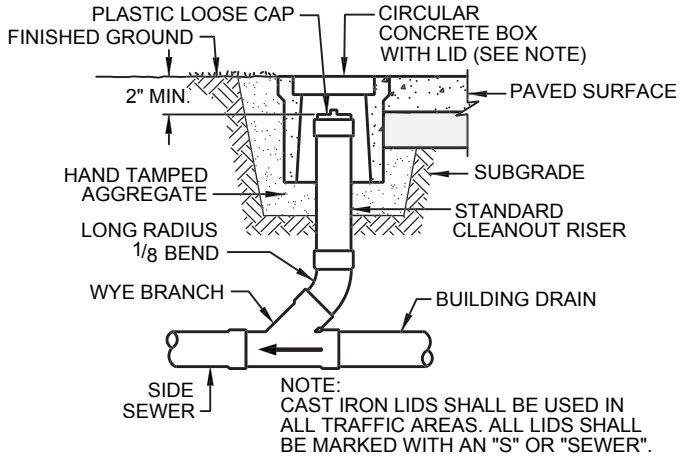

BACKFLOW PROTECTION/ OVERFLOW SYSTEM TYPE 2

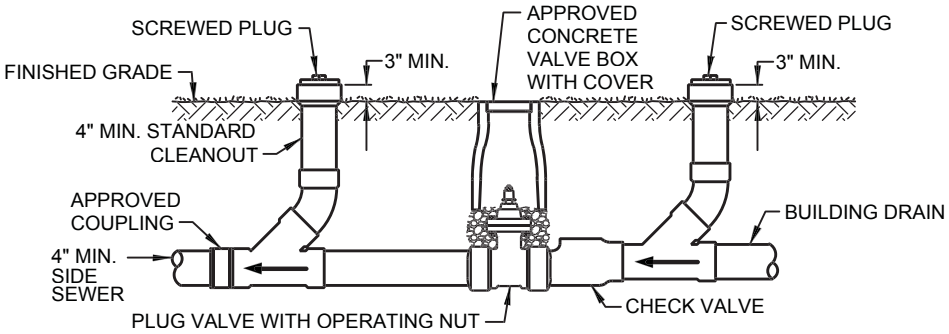

BACKWATER CHECK VALVE & SHUTOFF SYSTEM TYPE 3

NOTES:

1. **BACKFLOW PROTECTION/OVERFLOW SYSTEM** - TYPE 1 OR 2 SHALL BE INSTALLED IN SEWERS WHERE THE LOWEST DRAIN OUTLET TO BE CONNECTED TO THE MAIN SEWER IS BELOW A POINT 12-INCHES ABOVE THE SURFACE OF THE NEAREST UPSTREAM SEWER STRUCTURE AND IN ALL NEW BUILDINGS.

2. **BACKWATER CHECK VALVE AND SHUTOFF SYSTEM** - TYPE 3 SHALL BE INSTALLED IN SEWERS SERVING BUILDINGS WHERE A BACKFLOW PROTECTION/OVERFLOW SYSTEM IS REQUIRED AND WHERE SEWAGE CANNOT OVERFLOW TO AN ADJACENT AREA WITHOUT SERIOUS DAMAGE.

3. ALL CLEANOUT PIPES AND FITTINGS SHALL BE THE SAME SIZE AND MATERIAL AS THE LATERAL TO WHICH THEY CONNECT.

4. SEWER SERVICE SHALL BE SDR 35, VITRIFIED CLAY, POLYVINYL CHLORIDE OR DUCTILE IRON PIPE.

(Not To Scale)

PUBLIC WORKS DEPARTMENT

THE CITY OF BRENTWOOD

SEWER BACKFLOW RELIEF DEVICES

BALWINDER S. GREWAL CITY ENGINEER

DATE: DEC. 31, 2013

REVISED:

SHEET No. SS-7

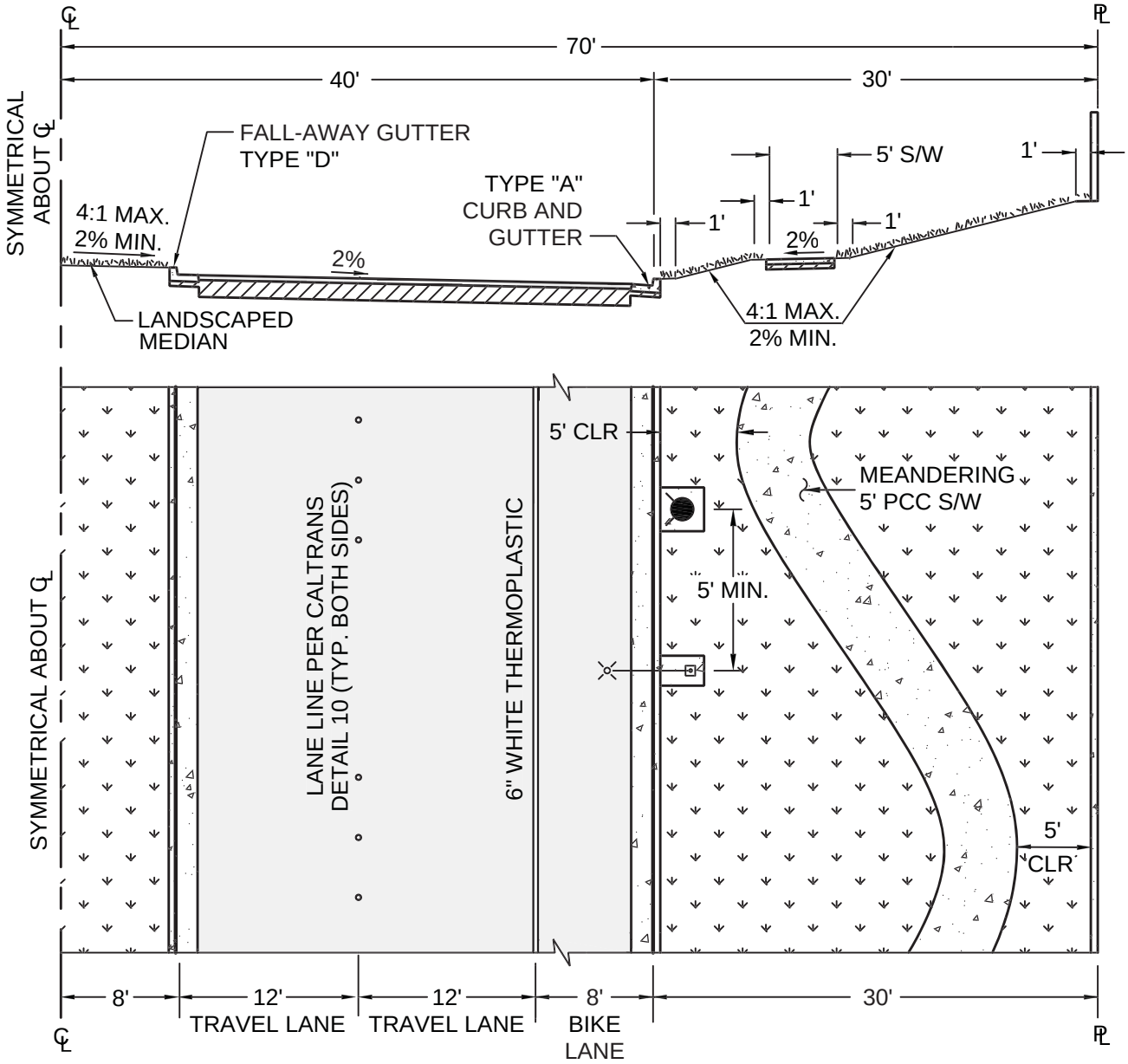

NOTES:

1. SEE ST-23 FOR SIDEWALK, CURB AND GUTTER TYPES.
2. SEE ST-24 FOR SUBSURFACE DRAIN BELOW CURB AND SIDEWALK.

(Not To Scale)

REGISTERED PROFESSIONAL ENGINEER
BALWINDER S. GREWAL
C 49122
EXP. 9/30/14
STATE OF CALIFORNIA

PUBLIC WORKS DEPARTMENT

THE CITY OF BRENTWOOD

ARTERIAL STREET

BALWINDER S. GREWAL CITY ENGINEER

DATE: DEC. 29, 2000

REVISED: DEC. 31, 2013

SHEET No.

ST-1

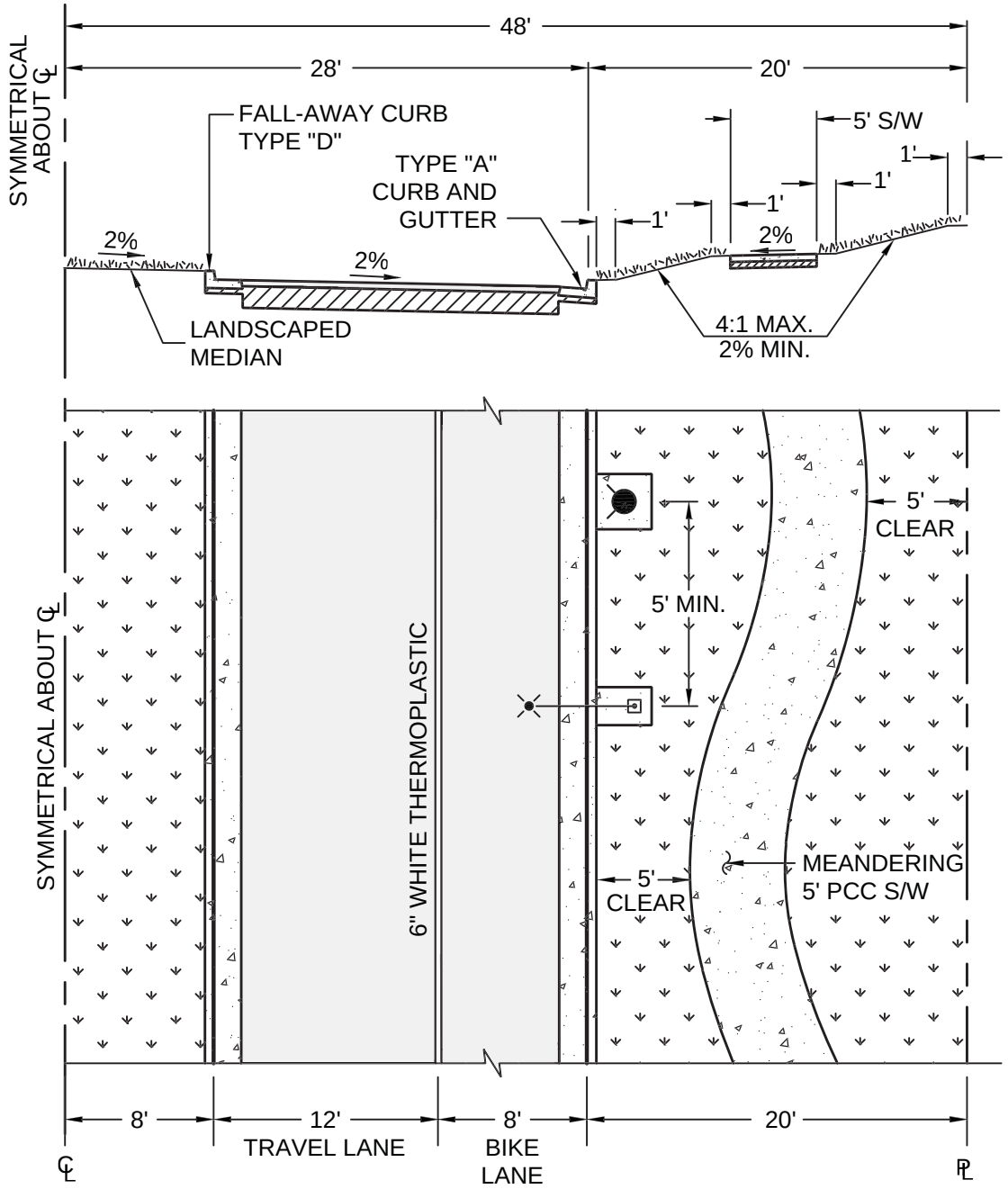

NOTES:

1. SEE ST-23 FOR SIDEWALK, CURB AND GUTTER TYPES.
2. SEE ST-24 FOR SUBSURFACE DRAIN BELOW CURB AND SIDEWALK.

(Not To Scale)

REGISTERED PROFESSIONAL ENGINEER
BALWINDER S. GREWAL
C 49122
EXP. 9/30/14
STATE OF CALIFORNIA

PUBLIC WORKS DEPARTMENT

THE CITY OF BRENTWOOD

COLLECTOR STREET

BALWINDER S. GREWAL CITY ENGINEER

DATE: JAN. 31, 2001

REVISED: DEC. 31, 2013

SHEET No.

ST-2

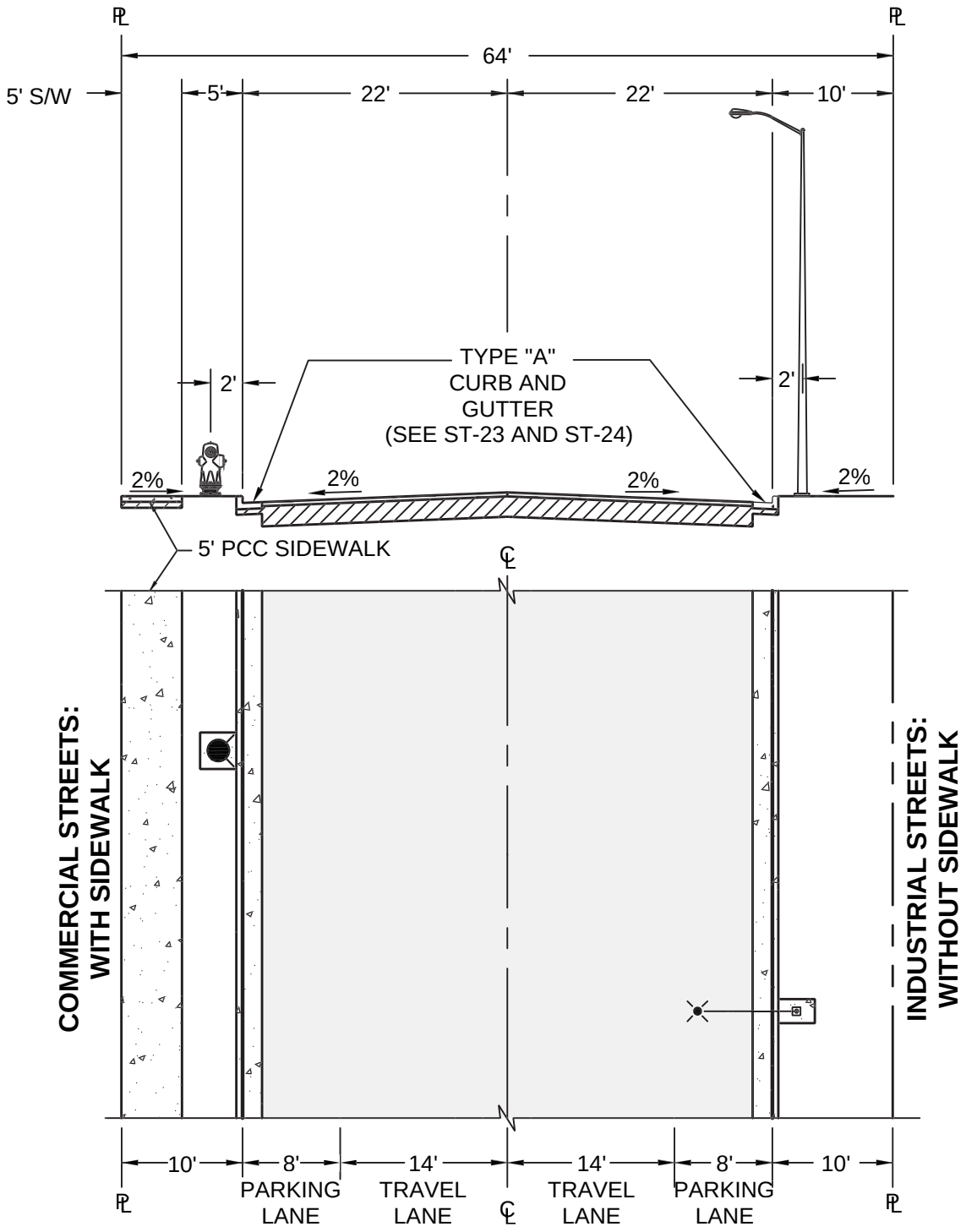

(Not To Scale)

REGISTERED PROFESSIONAL ENGINEER
BALWINDER S. GREWAL
C 49122
EXP. 9/30/14
STATE OF CALIFORNIA

PUBLIC WORKS DEPARTMENT

THE CITY OF BRENTWOOD

INDUSTRIAL/COMMERCIAL STREET

BALWINDER S. GREWAL CITY ENGINEER

DATE: JAN. 8, 2001

REVISED: DEC. 31, 2013

SHEET No.

ST-3

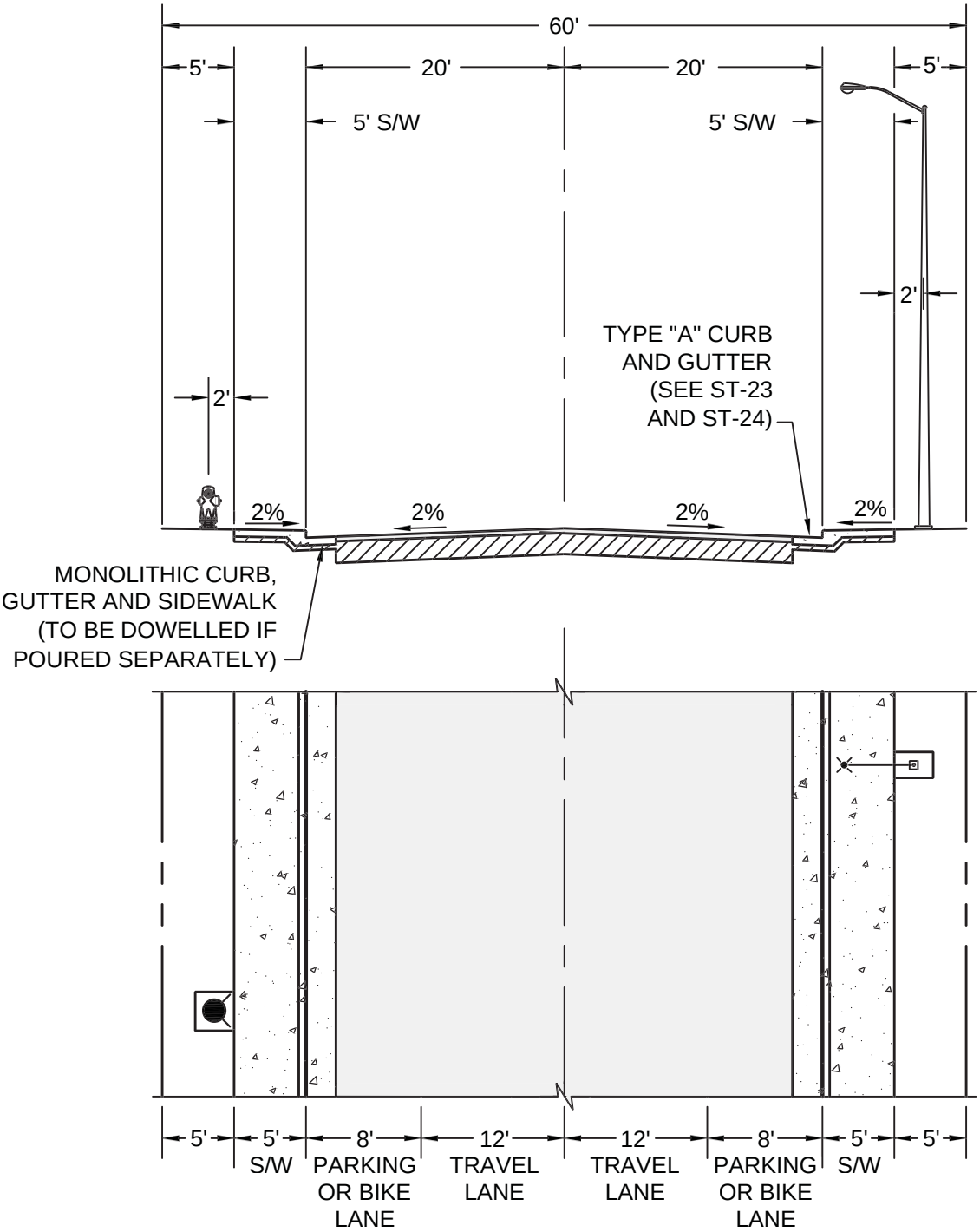

(Not To Scale)

REGISTERED PROFESSIONAL ENGINEER
BALWINDER S. GREWAL
C 49122
EXP. 9/30/14
STATE OF CALIFORNIA

PUBLIC WORKS DEPARTMENT

THE CITY OF BRENTWOOD

RESIDENTIAL COLLECTOR STREET

BALWINDER S. GREWAL CITY ENGINEER

DATE: JAN. 12, 2001

REVISED: DEC. 31, 2013

SHEET No.

ST-4

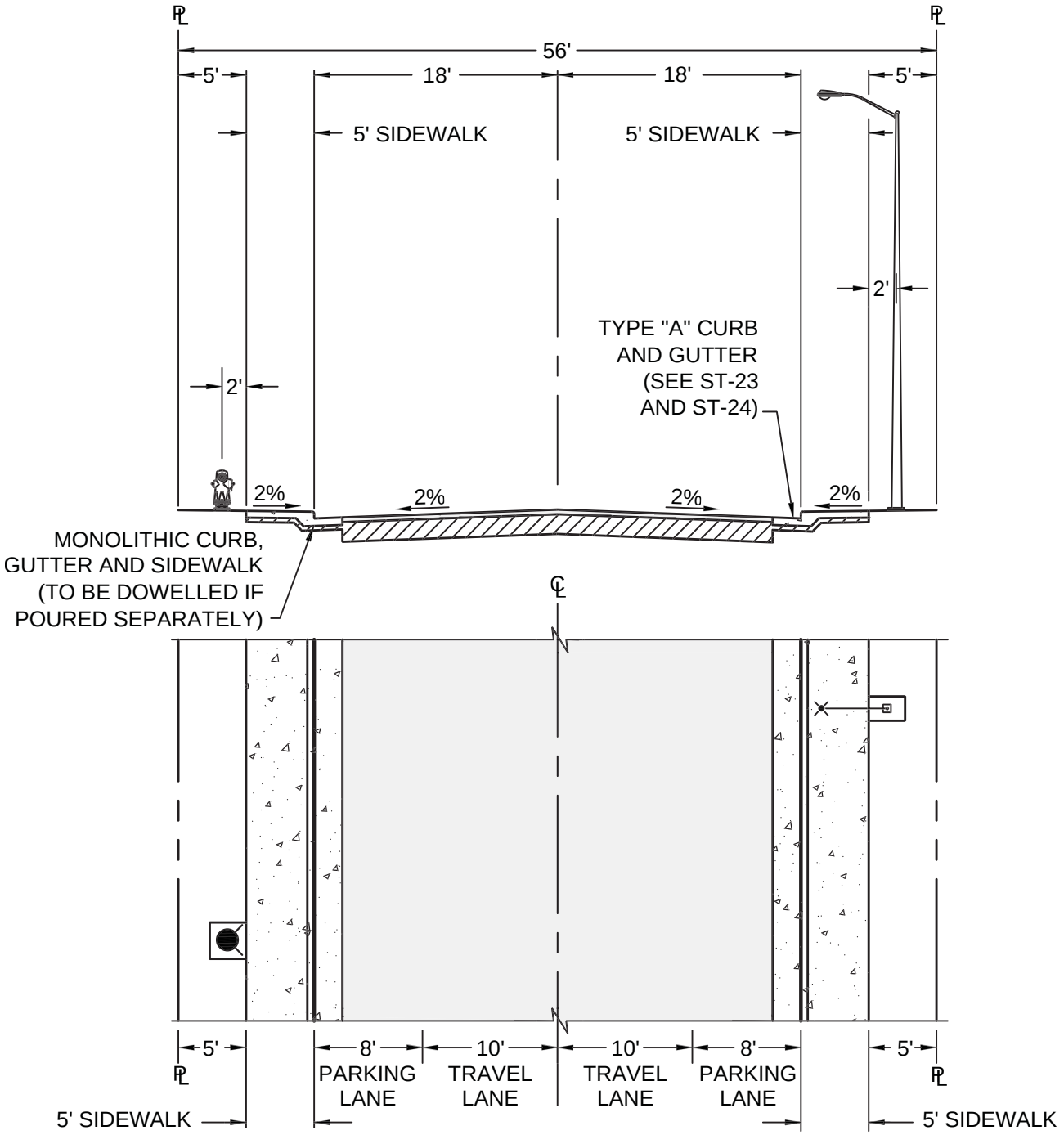

NOTE:

ONLY TO BE USED FOR STREETS THAT HAVE LESS THAN 60 UNITS TAKING ACCESS; AND ALSO, FOR CUL-DE-SACS UP TO 250' LONG.

(Not To Scale)

REGISTERED PROFESSIONAL ENGINEER
BALWINDER S. GREWAL
C 49122
EXP. 9/30/14
STATE OF CALIFORNIA

PUBLIC WORKS DEPARTMENT

THE CITY OF BRENTWOOD

RESIDENTIAL LOCAL STREET

BALWINDER S. GREWAL CITY ENGINEER

DATE:	JAN. 12, 2001	SHEET No.
REVISED:	DEC. 31, 2013	ST-5

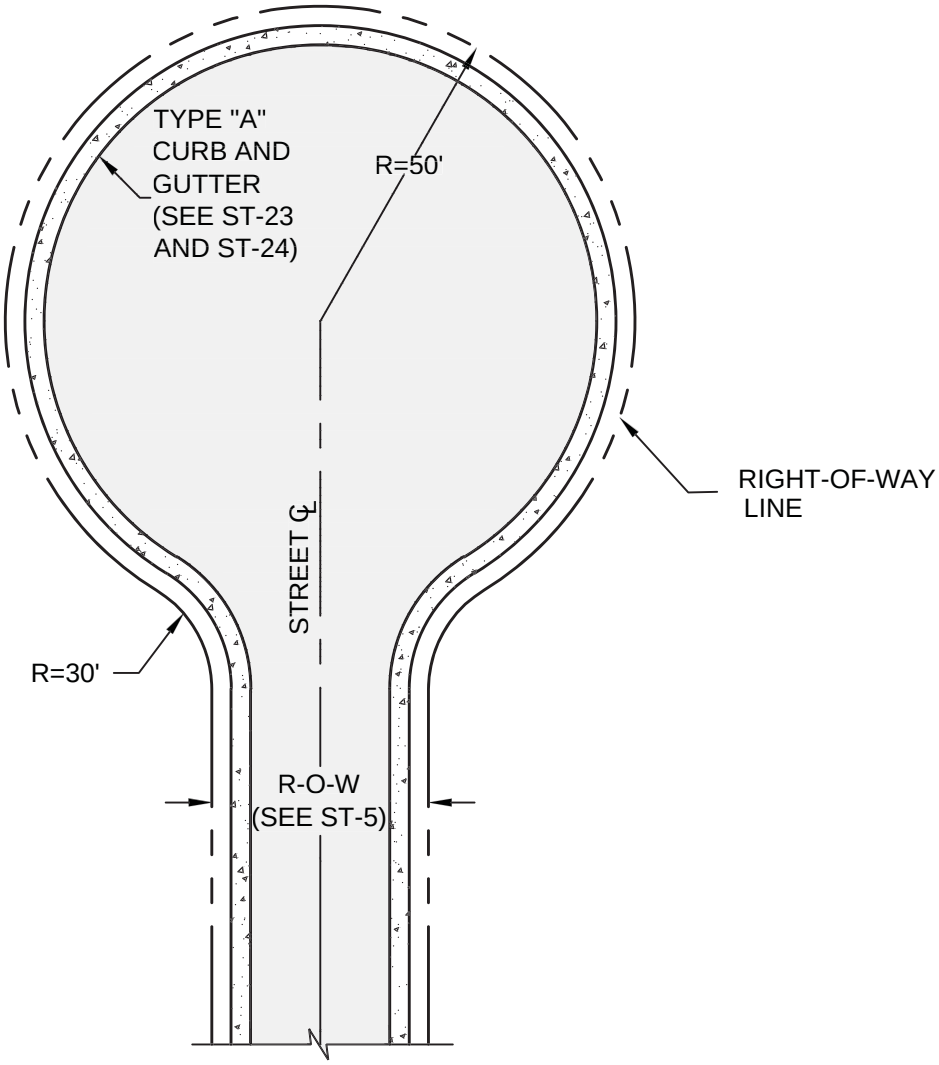

NOTES:

1. CALTRANS STANDARD W53, "NOT A THROUGH STREET", SHALL BE POSTED AT THE ENTRANCE TO ALL CUL-DE-SACS.

2. STREET CENTERLINE FROM CENTER OF CUL-DE-SAC TO RIGHT OF WAY OF INTERSECTING STREET SHALL NOT EXCEED 600 FEET.

(Not To Scale)

REGISTERED PROFESSIONAL ENGINEER
BALWINDER S. GREWAL
C 49122
EXP. 9/30/14
STATE OF CALIFORNIA

PUBLIC WORKS DEPARTMENT

THE CITY OF BRENTWOOD

CUL-DE-SAC

BALWINDER S. GREWAL CITY ENGINEER

DATE:	JAN. 12, 2001	SHEET No.
REVISED:	DEC. 31, 2013	ST-6

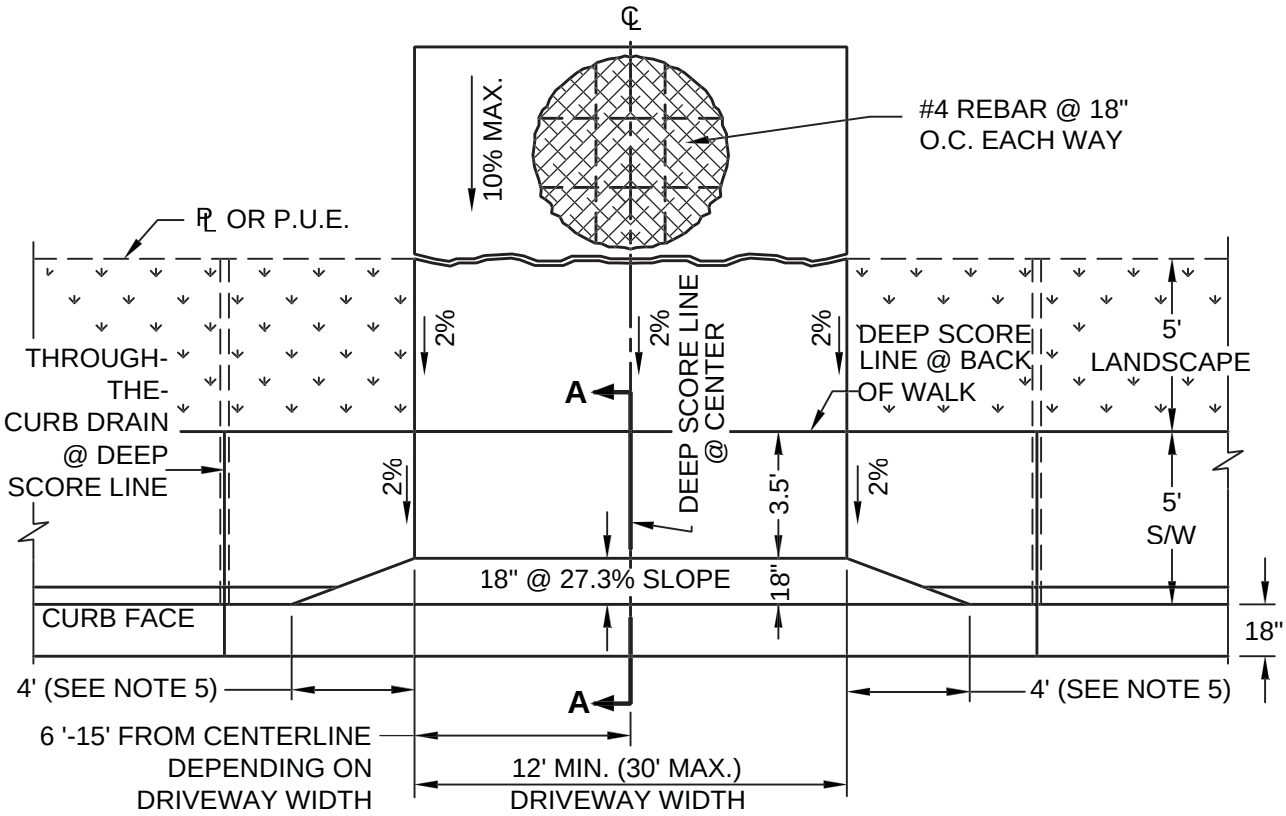

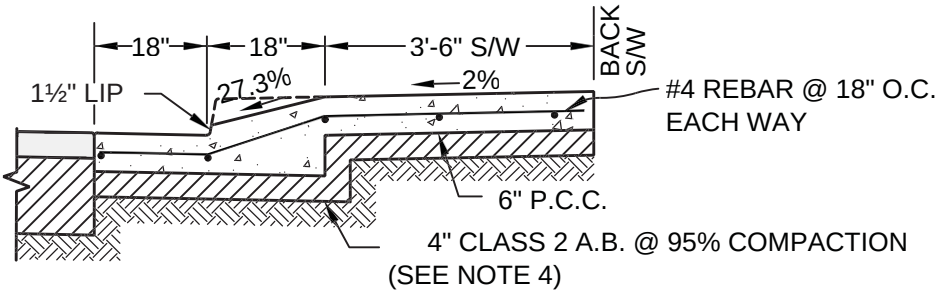

ADJACENT SIDEWALK WITH BEVELED CURB SECTION A-A

NOTES:

1. ALL CONCRETE SHALL BE CLASS B, 2500 P.S.I. MINIMUM; WITH 1½ LBS. FIBRILLATED. POLYPROPYLENE FIBERS PER CUBIC YARD.
2. BROOM FINISH WALK AT RIGHT ANGLES TO CURB; CURB AND GUTTER TO STREET.
3. ALL CONCRETE SHALL HAVE A MINIMUM 4" CUSHION OF CLASS 2 A.B. @ 95% RELATIVE COMPACTION (D1557-78) ON SUB-GRADE @ 95% RELATIVE COMPACTION. THE USE OF RECYCLED A.B. SHALL NOT BE ALLOWED.
4. ON EXPANSIVE NATIVE SOIL, 90% RELATIVE COMPACTION IS ACCEPTABLE ON SUBGRADE.
5. SEE ST-23 FOR TRANSITION LENGTH FROM BEVELED CURB TO STANDARD CURB.

(Not To Scale)

REGISTERED PROFESSIONAL ENGINEER
BALWINDER S. GREWAL
C 49122
EXP. 9/30/14
STATE OF CALIFORNIA

PUBLIC WORKS DEPARTMENT

THE CITY OF BRENTWOOD

RESIDENTIAL DRIVEWAY WITH ADJACENT SIDEWALK

BALWINDER S. GREWAL CITY ENGINEER

DATE:	APRIL 25, 2007	SHEET No.
REVISED:	DEC. 31, 2013	ST-7a

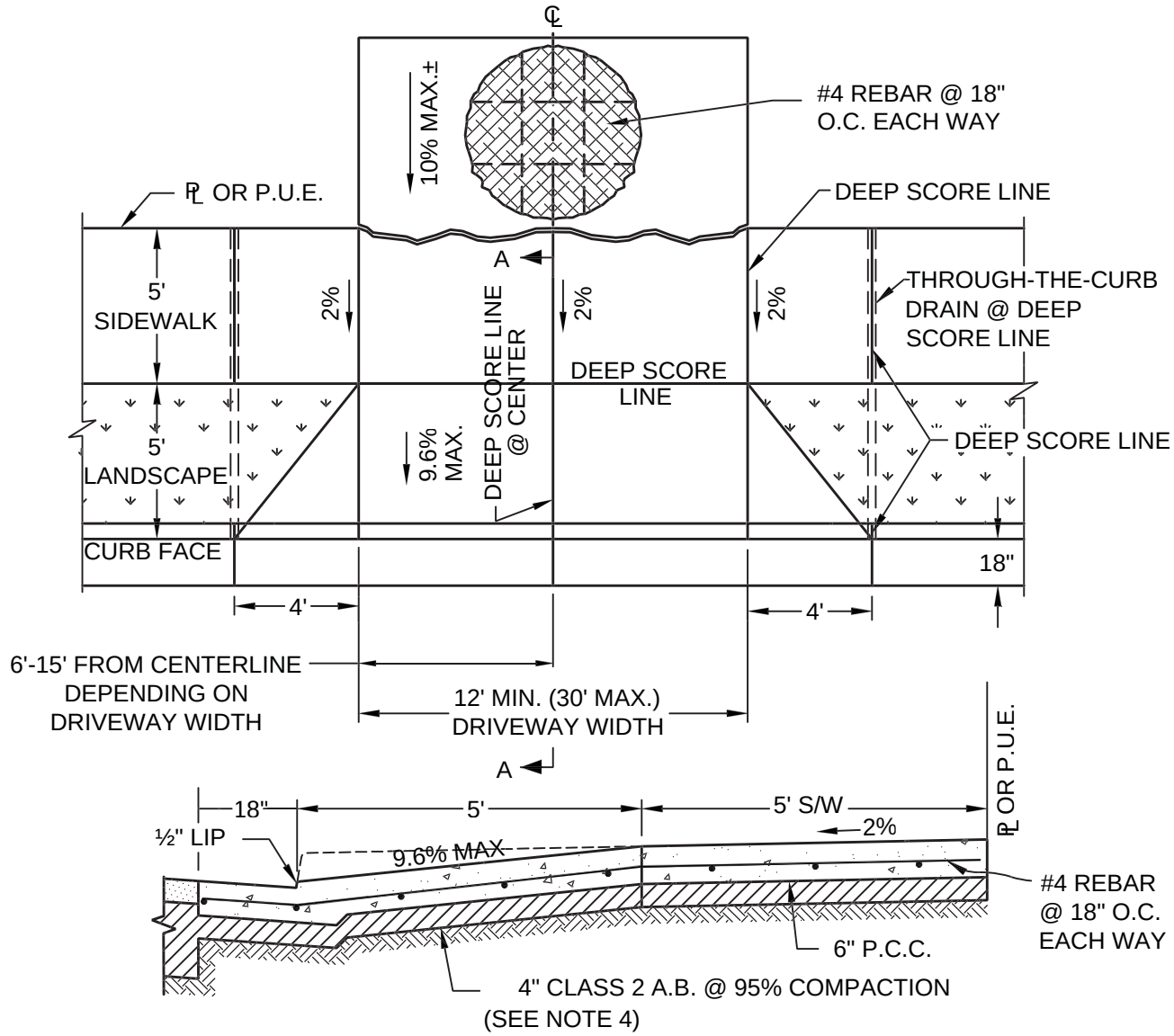

SEPARATED SIDEWALK SECTION A-A

NOTES:

1. ALL CONCRETE SHALL BE CLASS B, 2500 P.S.I. MINIMUM; WITH 1½ LBS. FIBRILLATED POLYPROPYLENE FIBERS PER CUBIC YARD.
2. BROOM FINISH WALK AT RIGHT ANGLES TO CURB; CURB AND GUTTER TO STREET.
3. ALL CONCRETE SHALL HAVE A MINIMUM 4" CUSHION OF CLASS 2 A.B. @ 95% RELATIVE COMPACTION (D1557-78) ON SUB-GRADE @ 95% RELATIVE COMPACTION. THE USE OF RECYCLED A.B. SHALL NOT BE ALLOWED.
4. ON EXPANSIVE NATIVE SOIL, 90% RELATIVE COMPACTION IS ACCEPTABLE ON SUBGRADE.

(Not To Scale)

REGISTERED PROFESSIONAL ENGINEER
BALWINDER S. GREWAL
C 49122
EXP. 9/30/14
STATE OF CALIFORNIA

PUBLIC WORKS DEPARTMENT

THE CITY OF BRENTWOOD

RESIDENTIAL DRIVEWAY WITH SEPARATED SIDEWALK

BALWINDER S. GREWAL CITY ENGINEER

DATE:	APRIL 25, 2007	SHEET No.
REVISED:	DEC. 31, 2013	ST-7b

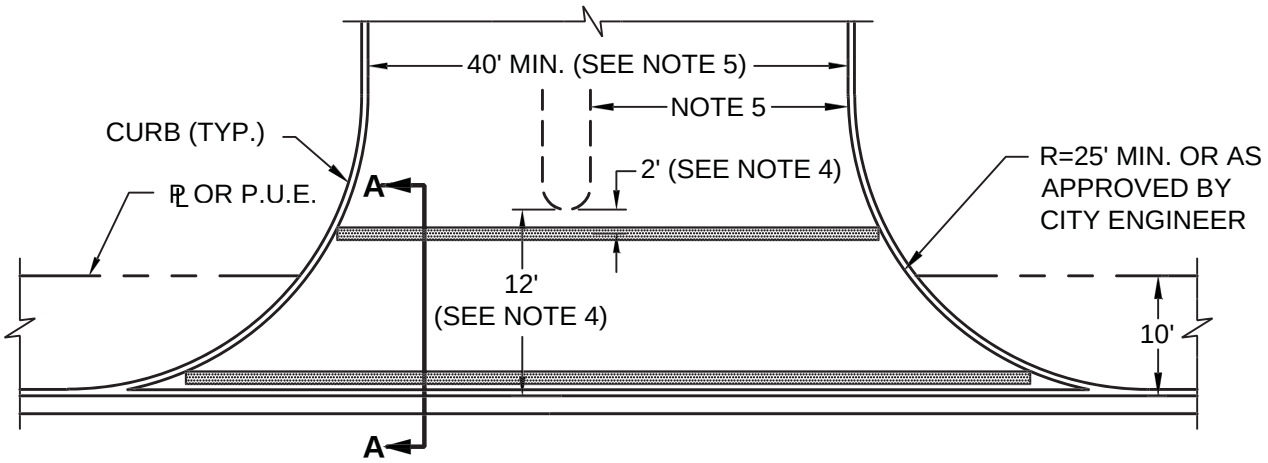

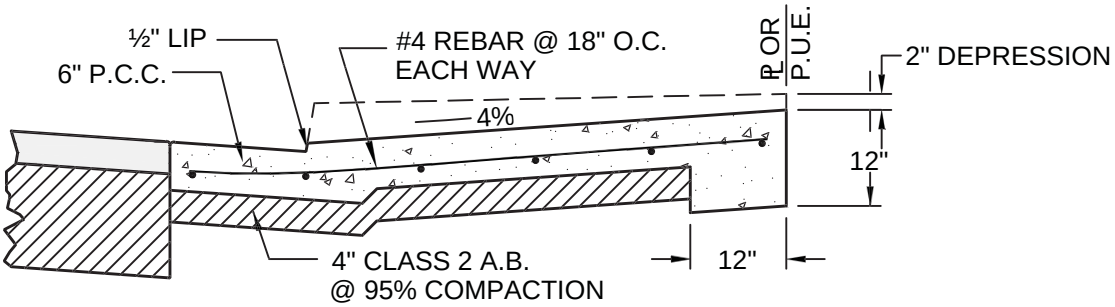

SECTION A-A

NOTES:

1. ALL CONCRETE SHALL BE CLASS B, 2500 P.S.I. WITH 1½ LBS. FIBRILLATED POLYPROPYLENE FIBERS PER CUBIC YARD.
2. BROOM FINISH WALK AT RIGHT ANGLES TO CURB; CURB AND GUTTER TO STREET.
3. ALL CONCRETE SHALL HAVE A MINIMUM 4" CUSHION OF CLASS 2 A.B. @ 95% RELATIVE COMPACTION (D1557-78) ON SUB-GRADE @ 95% RELATIVE COMPACTION. THE USE OF RECYCLED CLASS 2 A.B. SHALL NOT BE ALLOWED.
4. THE LOCATION OF THE NOSE OF THE MEDIAN SHALL BE 12' FROM THE CURB LINE OR 2' ON CENTER FROM THE INNER CROSSWALK, WHICHEVER IS GREATER.
5. FOR DRIVEWAYS WITH MEDIAN ISLAND, A 25' CLEARANCE SHALL BE PROVIDED FOR INGRESS.
6. A HANDICAP RAMP SHALL BE PROVIDED FOR THE CROSSWALK PER CALTRANS STANDARD PLAN NSP A88 CASE E AND AS APPROVED BY THE CITY ENGINEER.
7. REFER TO ST-11 FOR VISIBILITY REQUIREMENTS.

(Not To Scale)

PUBLIC WORKS DEPARTMENT

THE CITY OF BRENTWOOD

INDUSTRIAL/COMMERCIAL DRIVEWAY

BALWINDER S. GREWAL CITY ENGINEER

DATE:	JUNE 20, 2003	SHEET No.
REVISED:	DEC. 31, 2013	ST-8

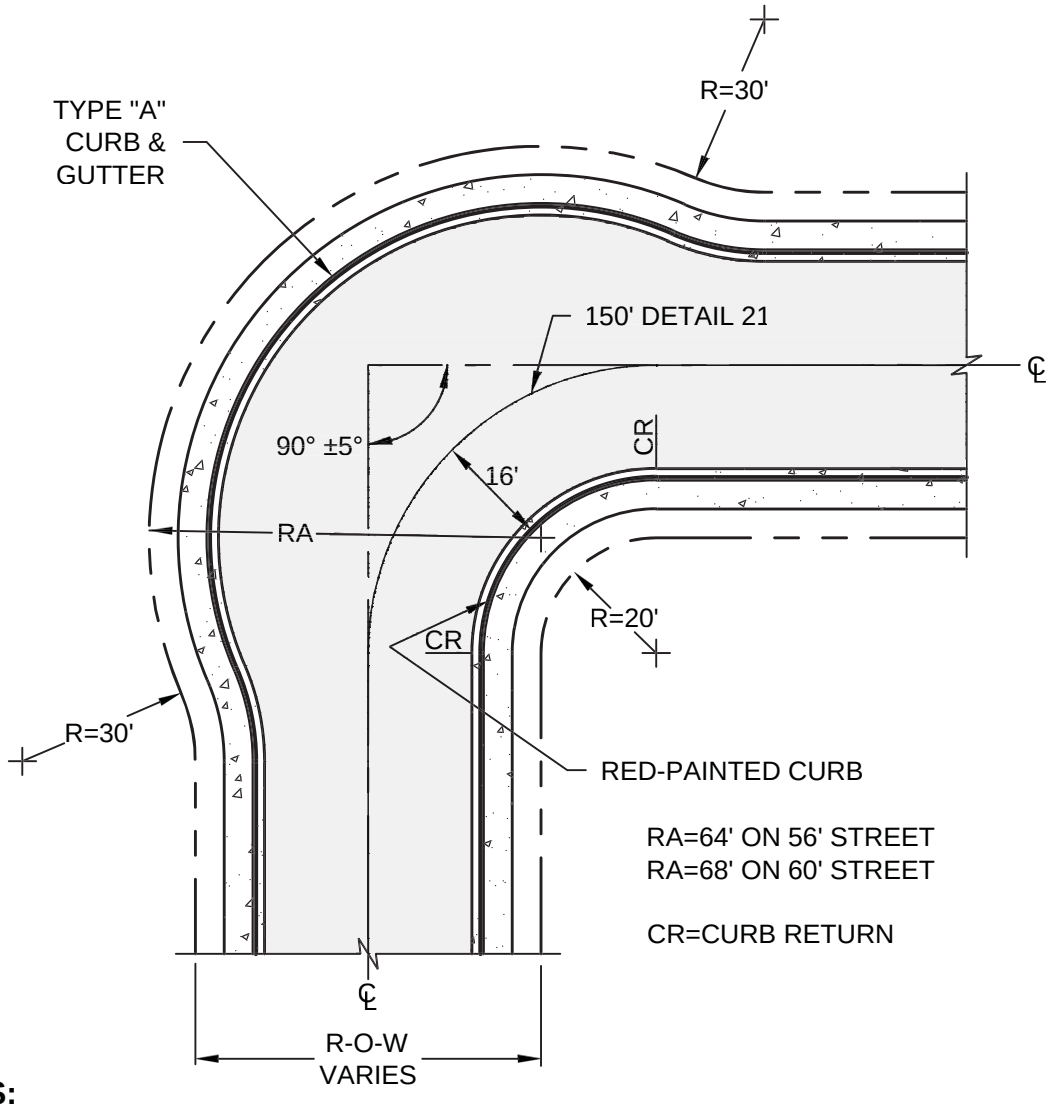

NOTES:

1. INTERSECTION BULBS ARE NOT REQUIRED ON STREETS WITH A CENTERLINE RADIUS OF 200' OR MORE.
2. ALL RADII SHOWN PERTAIN TO RIGHT-OF-WAY LINES.
3. A MINIMUM 50' OF TANGENT IS REQUIRED FROM THE POINT OF INTERSECTION OF THE CENTERLINES.
4. INTERSECTION ANGLE SHALL BE 90° ± 5°.

(Not To Scale)

REGISTERED PROFESSIONAL ENGINEER
BALWINDER S. GREWAL
C 49122
EXP. 9/30/14
STATE OF CALIFORNIA

PUBLIC WORKS DEPARTMENT

THE CITY OF BRENTWOOD

90° INTERSECTION ELBOW

BALWINDER S. GREWAL CITY ENGINEER

DATE: APR. 29, 2005

REVISED: DEC. 31, 2013

SHEET No.

ST-9

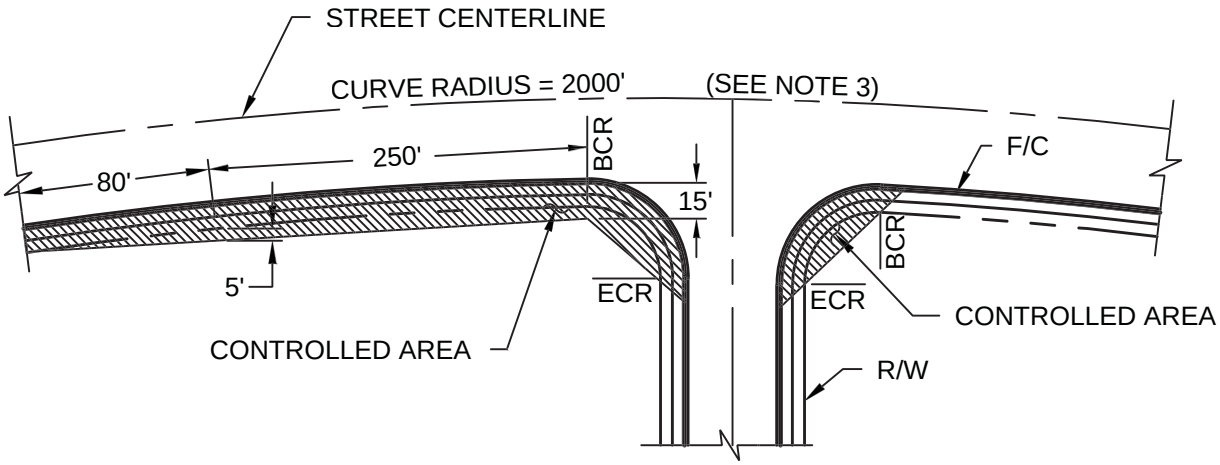

NOTES:

1. FENCES OR WALLS SHALL BE CONSTRUCTED OUTSIDE OF THE CONTROLLED AREA.
2. FOR PLANTING IN CONTROLLED AREA, SEE STANDARD PLAN ST-11, VISIBILITY REQUIREMENTS.
3. CURVES WITH RADII OF LESS THAN 2,000 FEET SHALL REQUIRE SPECIAL DESIGN FOR SIGHT DISTANCE SUBJECT TO APPROVAL BY THE CITY ENGINEER.

LEGEND:

CONTROLLED AREA

(Not To Scale)

REGISTERED PROFESSIONAL ENGINEER
BALWINDER S. GREWAL
C 49122
EXP. 9/30/14
STATE OF CALIFORNIA

PUBLIC WORKS DEPARTMENT

THE CITY OF BRENTWOOD

SIGHT DISTANCE REQUIREMENTS

BALWINDER S. GREWAL CITY ENGINEER

DATE: APRIL 15, 1999

REVISED: DEC. 31, 2013

SHEET No.

ST-10

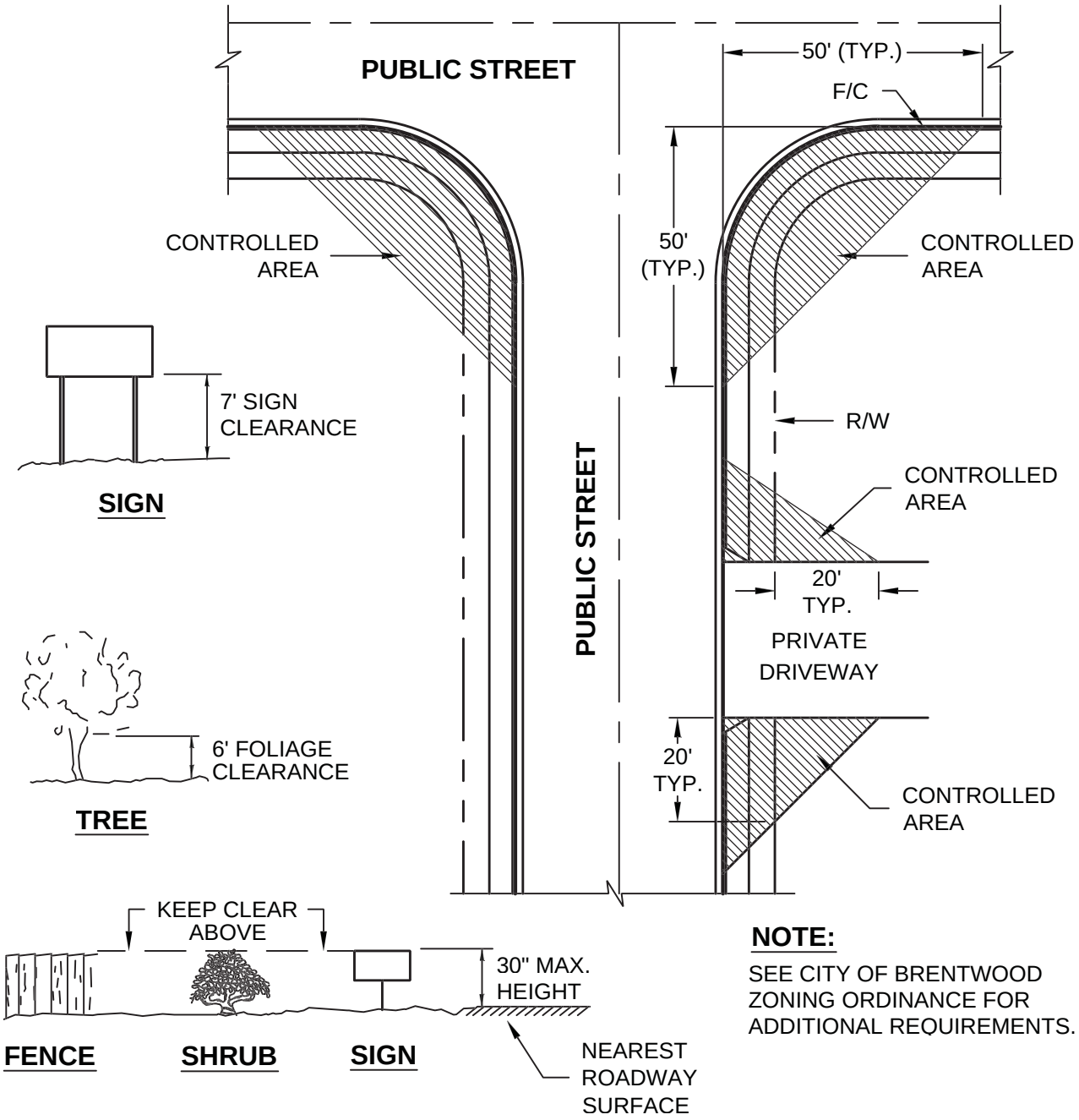

NOTE:

SEE CITY OF BRENTWOOD ZONING ORDINANCE FOR ADDITIONAL REQUIREMENTS.

(Not To Scale)

REGISTERED PROFESSIONAL ENGINEER
BALWINDER S. GREWAL
C 49122
EXP. 9/30/14
STATE OF CALIFORNIA

PUBLIC WORKS DEPARTMENT

THE CITY OF BRENTWOOD

VISIBILITY REQUIREMENTS (1)

BALWINDER S. GREWAL CITY ENGINEER

DATE: JAN. 31, 1999

REVISED: DEC. 31, 2013

SHEET No.

ST-11

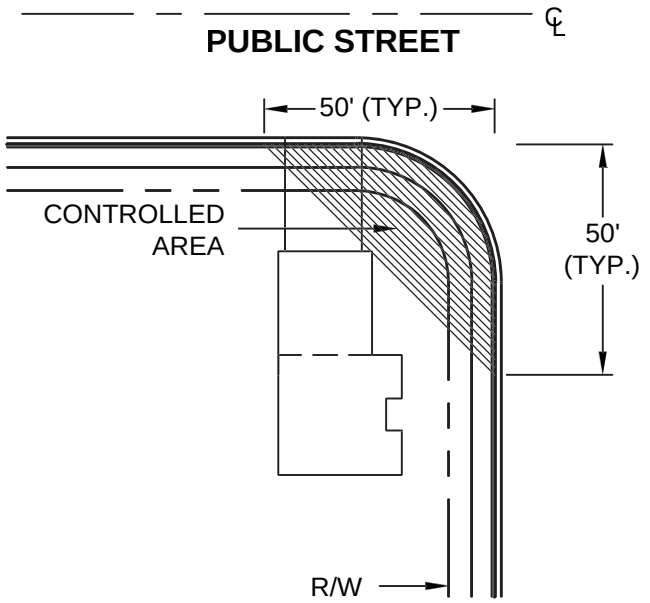

STANDARD

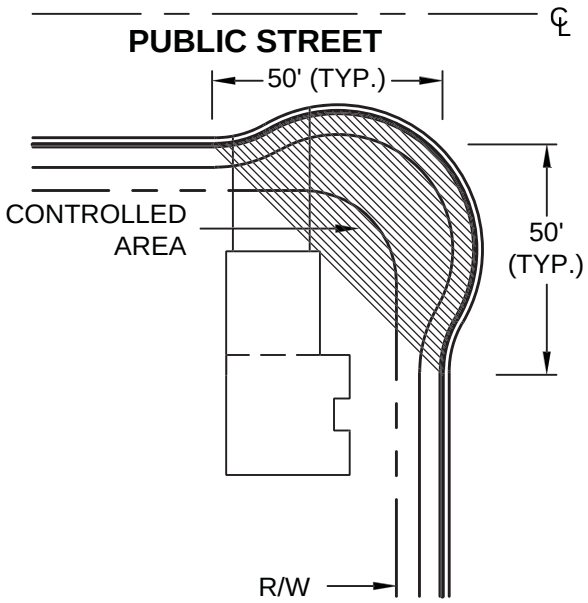

BULB "A"

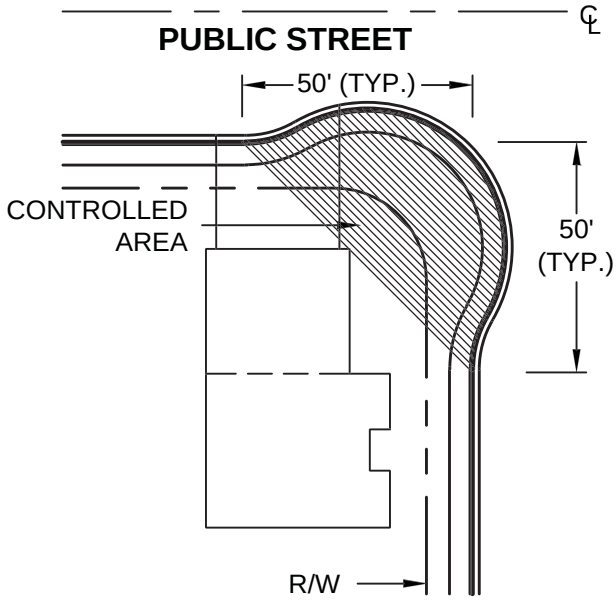

BULB "B"

(Not To Scale)

REGISTERED PROFESSIONAL ENGINEER
BALWINDER S. GREWAL
C 49122
EXP. 9/30/14
STATE OF CALIFORNIA

PUBLIC WORKS DEPARTMENT

THE CITY OF BRENTWOOD

VISIBILITY REQUIREMENTS (2)

BALWINDER S. GREWAL CITY ENGINEER

DATE: DEC. 31, 2013

REVISED:

SHEET No.

ST-11a

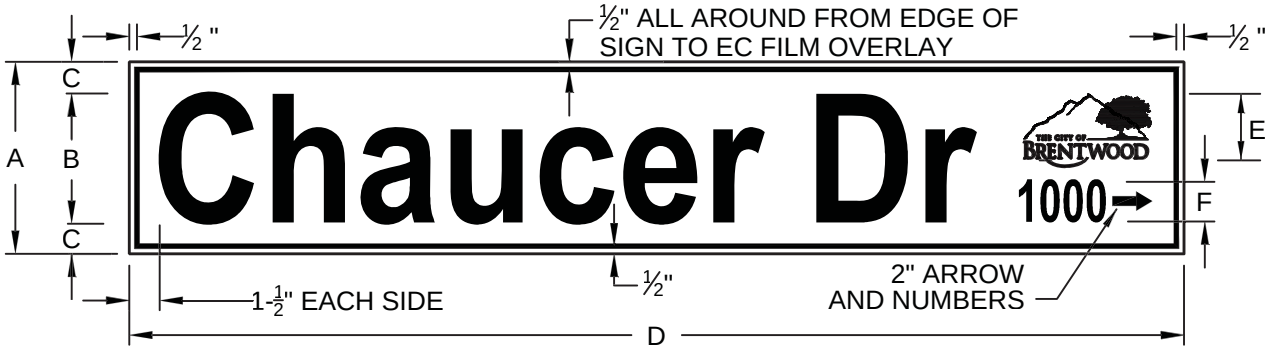

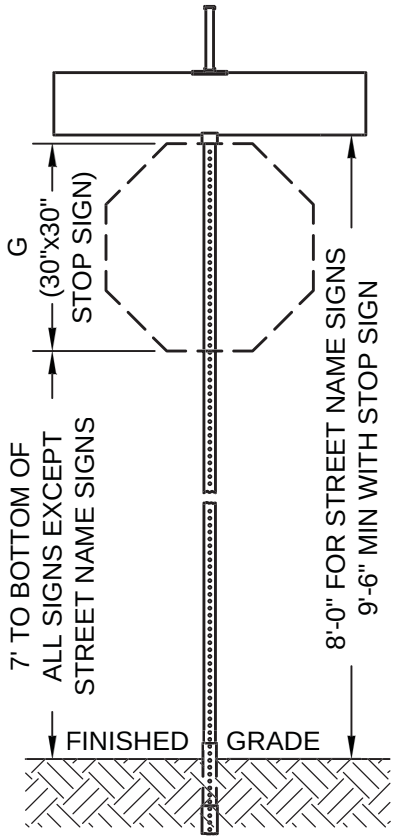

	RESIDENTIAL	THOROUGHFARE
A	6"	9"
B	4"	6"
C	1"	1.5"
D	24" MIN, INCREASE IN 6" INCREMENTS, AS NEEDED	
E	5" L x 3" H	6" L x 3.5" H
F	5" L x 2" H	6" L x 2" H
G	STOP SIGN 30"x30" HIGH INTENSITY, PRISMATIC WHITE BACKGROUND AGAINST RED 1172 AGAINST EC TRANSPARENT OVERLAY FILM	
LEGEND AND PLATE	WHITE, HIGH INTENSITY, PRISMATIC TYPE IV BACKGROUND AGAINST GREEN 1177 EC TRANSPARENT OVERLAY FILM	

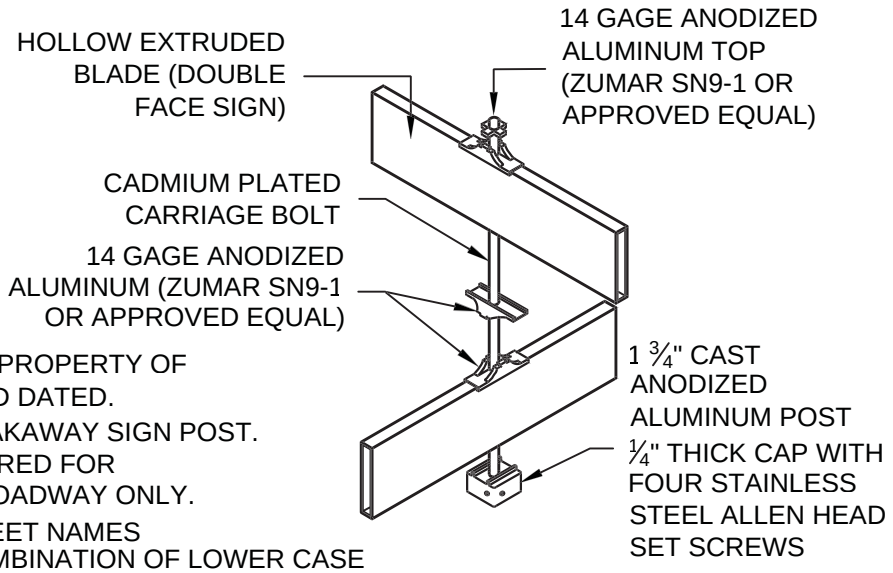

NOTES:

1. ALL SIGNS MUST BE STAMPED "PROPERTY OF THE CITY OF BRENTWOOD," AND DATED.
2. SEE ST-13 FOR ROADSIDE BREAKAWAY SIGN POST.
3. BLOCK ADDRESSES ARE REQUIRED FOR COLLECTORS AND ARTERIAL ROADWAY ONLY.
4. THE SIGN LETTERING FOR STREET NAMES SHALL BE COMPOSED OF A COMBINATION OF LOWER CASE LETTERS WITH INITIAL UPPER CASE LETTERS PER MUTCD SECTION 1A.11 AND 2D.05.

(Not To Scale)

REGISTERED PROFESSIONAL ENGINEER
BALWINDER S. GREWAL
C 49122
EXP. 9/30/14
STATE OF CALIFORNIA

PUBLIC WORKS DEPARTMENT

THE CITY OF BRENTWOOD

STREET NAME SIGN

BALWINDER S. GREWAL CITY ENGINEER

DATE: AUG. 18, 2008

REVISED: DEC. 31, 2013

SHEET No. ST-12

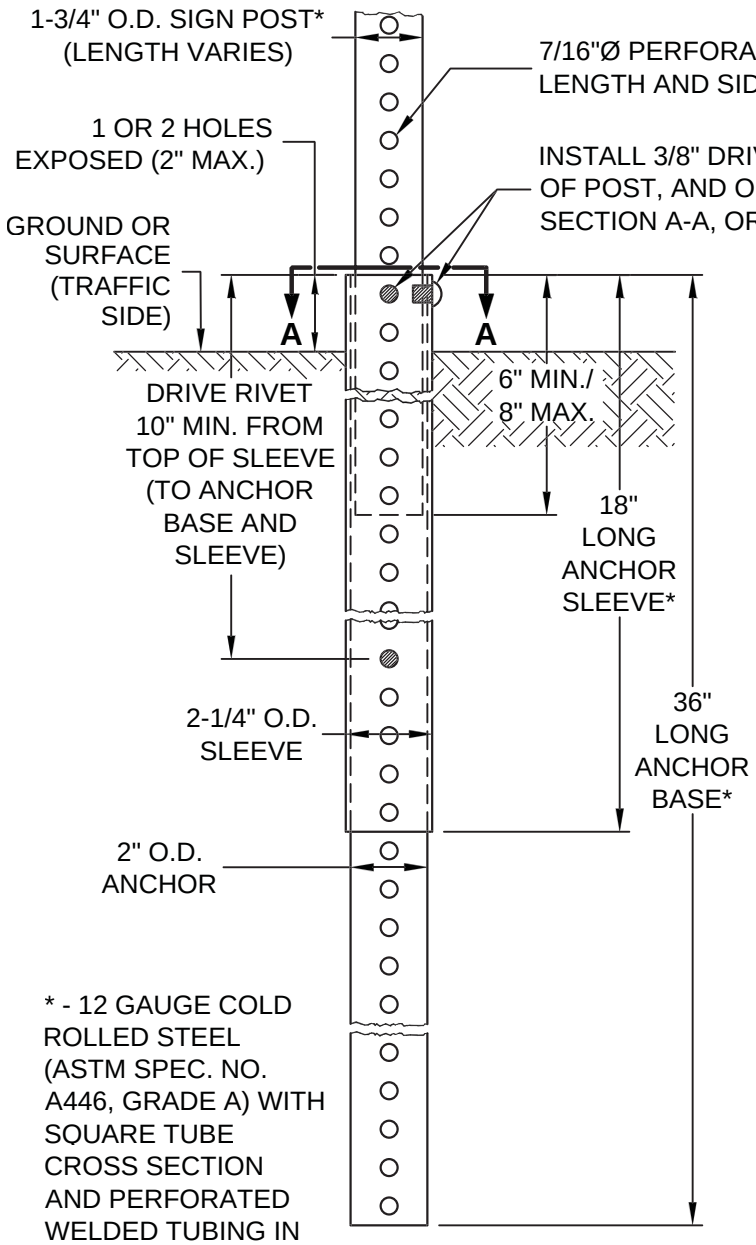

NOTES:

1. FOR INSTALLATION ON UNDISTURBED EARTH OR CONCRETE SIDEWALK. DISTURBED EARTH REQUIRES A COMPACTION OF 95% AROUND ITS SURROUNDING AREAS.
1. TELESCOPE THE ANCHOR SLEEVE OVER THE ANCHOR BASE UNTIL BOTH TUBES ARE FLUSH AT THE TOP AND THE PERFORATIONS ALIGN.
2. USE DRIVING CAP TO PROTECT THE END OF ALL MEMBERS WHEN THE ANCHOR ASSEMBLY IS BEING DRIVEN INTO THE GROUND.
3. STABILIZATION ANCHOR SLEEVES SHALL BE USED IN ALL AREAS WITH SOFT, LOOSE OR UNSTABLE SOILS.
4. SEE ST-6 FOR STREET SIGN DETAIL.

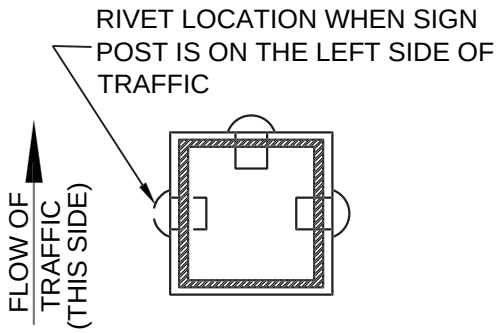

RIVET LOCATION
SECTION A-A

(Not To Scale)

REGISTERED PROFESSIONAL ENGINEER
BALWINDER S. GREWAL
C 49122
EXP. 9/30/14
STATE OF CALIFORNIA

PUBLIC WORKS DEPARTMENT

THE CITY OF BRENTWOOD

ROADSIDE BREAKAWAY SIGN POST

BALWINDER S. GREWAL CITY ENGINEER

DATE:	OCT. 31, 2000	SHEET No.
REVISED:	DEC. 31, 2013	ST-13

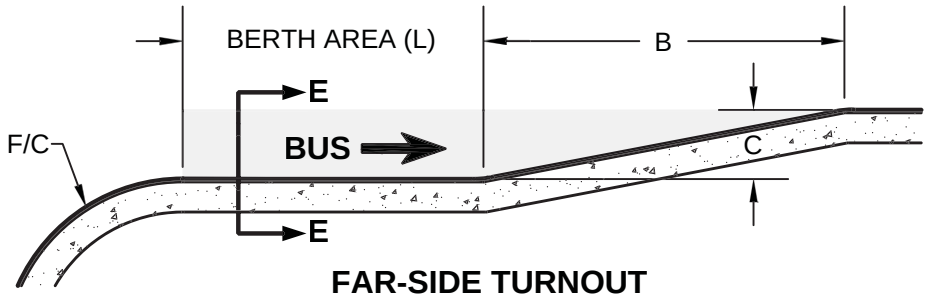

FAR-SIDE TURNOUT

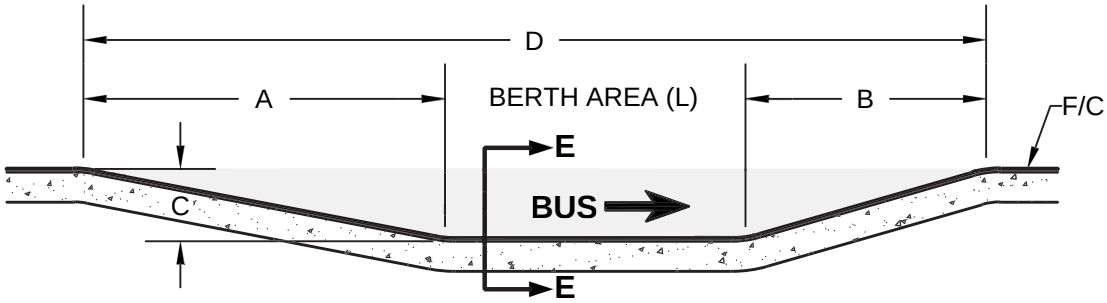

MID-BLOCK TURNOUT

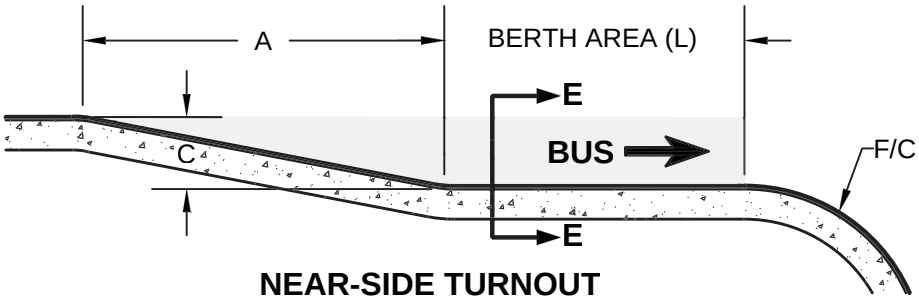

NEAR-SIDE TURNOUT

STREET TYPE	A	B	C	D
LOCAL	50'	50'	10'	L + 100'
COLLECTOR	100'	80'	10'	L + 180'
ARTERIAL	180'	125'	12'	L + 305'

L = BERTH AREA = 50' x + 20' y

x = NO. OF ARTICULATED BUSES
y = TOTAL NO. OF BUSES

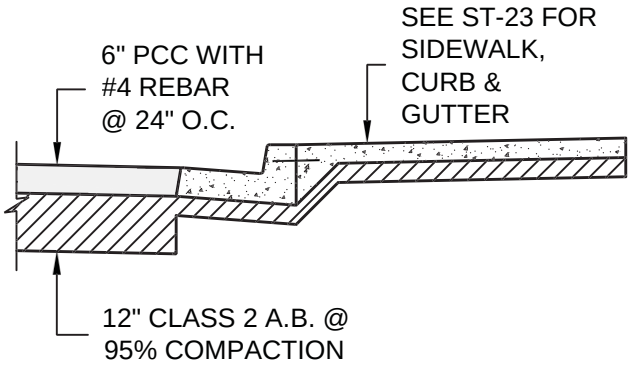

SECTION E-E

(Not To Scale)

PUBLIC WORKS DEPARTMENT

THE CITY OF BRENTWOOD

BUS TURNOUTS

BALWINDER S. GREWAL CITY ENGINEER

DATE: JULY 19, 2007
REVISED: DEC. 31, 2013

SHEET No.
ST-14

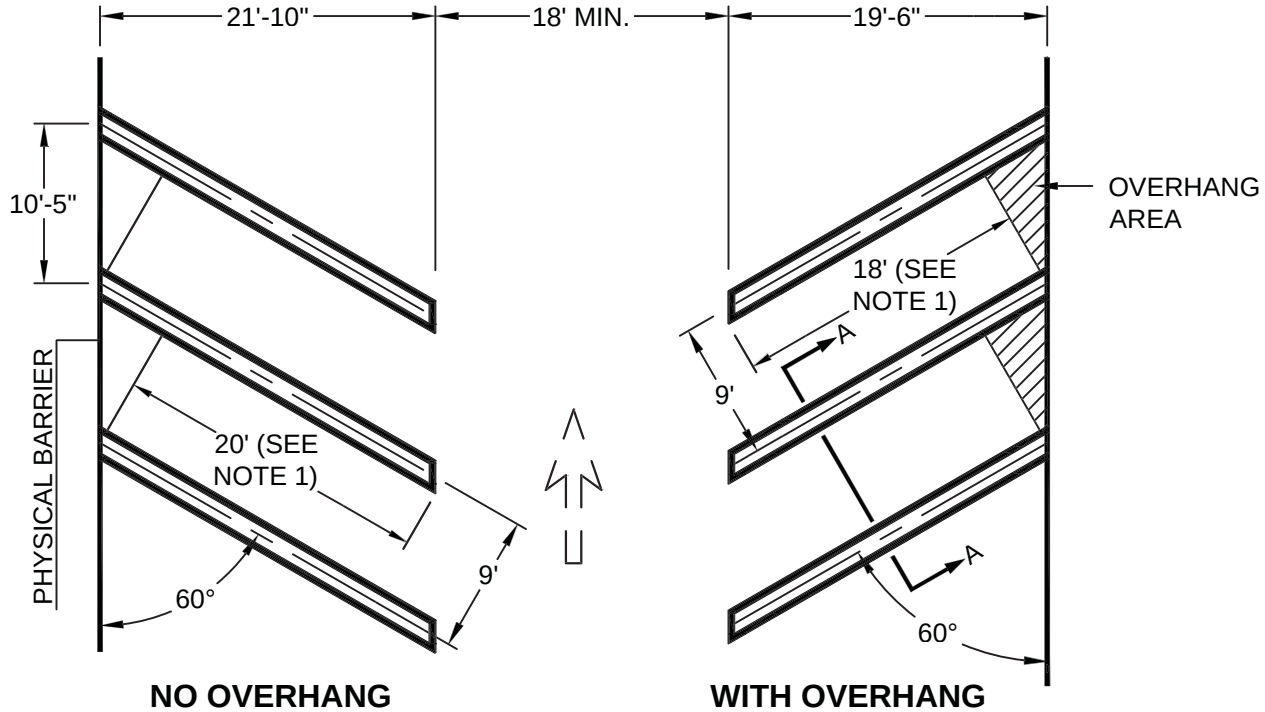

NO OVERHANG **WITH OVERHANG**

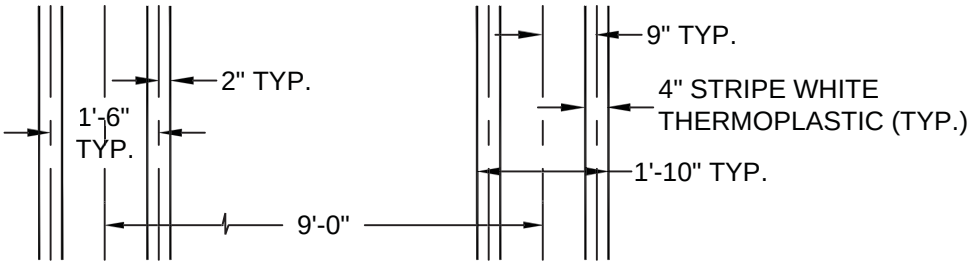

DETAIL A-A

NOTES:

1. PARKING STALL SHALL BE 18' IN LENGTH IN CASES WHERE A 2' OVERHANG AREA IS AS DESIGNED OR AVAILABLE SUCH AS SIDEWALK, LANDSCAPE AND OTHER LOW SURFACING. WHERE THERE IS A PHYSICAL BARRIER SUCH AS A WALL, TALL PLANTER OR A PROPERTY LINE, LENGTH SHALL BE 20'.

2. VEHICLES SHALL NOT BE PERMITTED TO OVERHANG PLANTERS AND/OR SIDEWALKS UNLESS THEY ARE 2' WIDER THAN REQUIRED BY THE CITY OF BRENTWOOD MUNICIPAL CODE. IF PLANTER AND/OR SIDEWALK WIDTHS ARE AS REQUIRED BY THE CODE, WHEEL-STOPS SHALL BE INSTALLED.

(Not To Scale)

PUBLIC WORKS DEPARTMENT

THE CITY OF BRENTWOOD

TYPICAL 60° PARKING STALL LAYOUT

BALWINDER S. GREWAL CITY ENGINEER

DATE: JUNE 16, 2001

REVISED: DEC. 31, 2013

SHEET No. **ST-15a**

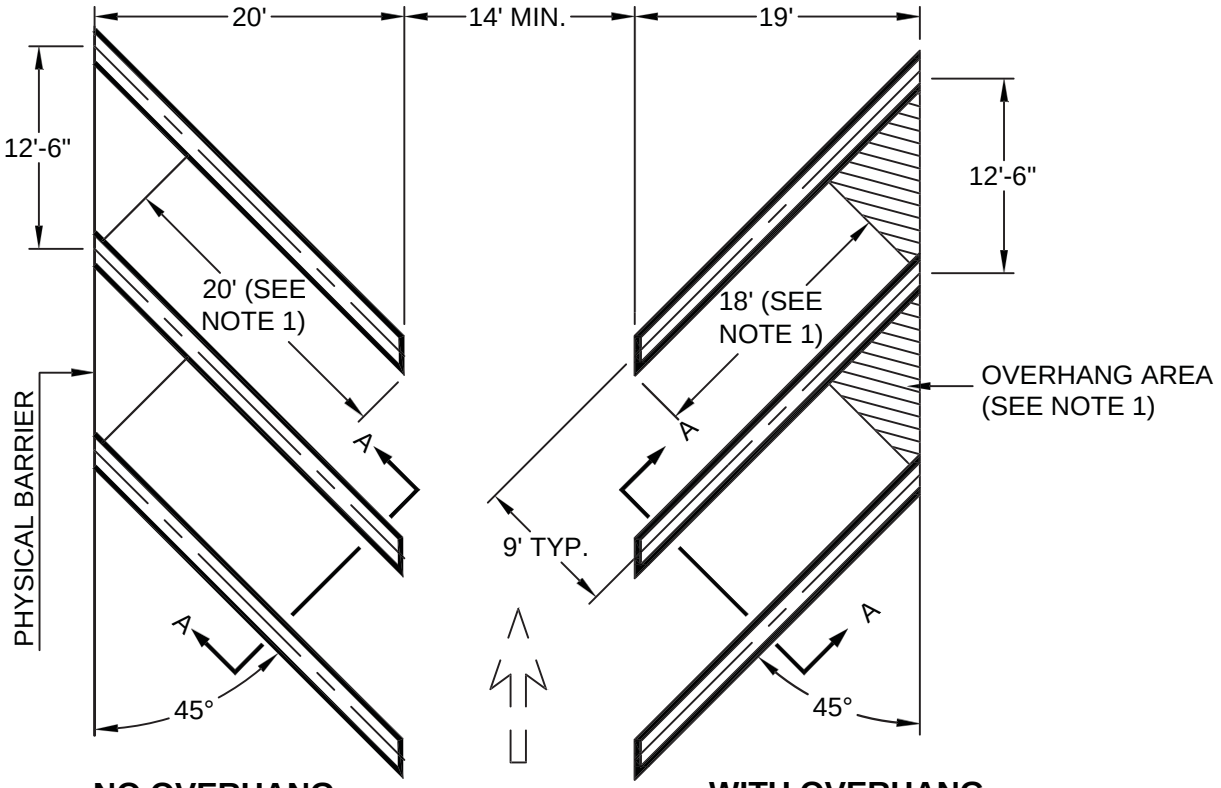

NO OVERHANG **WITH OVERHANG**

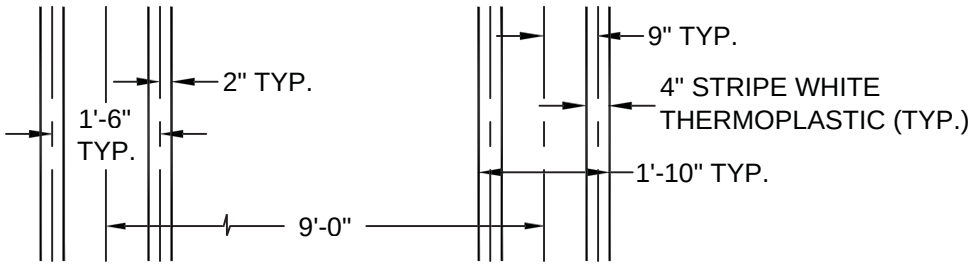

DETAIL A-A

NOTES:

1. PARKING STALL SHALL BE 18' IN LENGTH IN CASES WHERE A 2' OVERHANG AREA IS AS DESIGNED OR AVAILABLE SUCH AS SIDEWALK, LANDSCAPE AND OTHER LOW SURFACING. WHERE THERE IS A PHYSICAL BARRIER SUCH AS A WALL, TALL PLANTER OR A PROPERTY LINE, LENGTH SHALL BE 20'.

2. VEHICLES SHALL NOT BE PERMITTED TO OVERHANG PLANTERS AND/OR SIDEWALKS UNLESS THEY ARE 2' WIDER THAN REQUIRED BY THE CITY OF BRENTWOOD MUNICIPAL CODE. IF THE PLANTER AND/OR SIDEWALK WIDTHS ARE AS REQUIRED BY THE CODE, WHEEL-STOPS SHALL BE INSTALLED.

(Not To Scale)

PUBLIC WORKS DEPARTMENT

THE CITY OF BRENTWOOD

TYPICAL 45° PARKING STALL LAYOUT

BALWINDER S. GREWAL CITY ENGINEER

DATE:	JUNE 16, 2003	SHEET No.
REVISED:	DEC. 31, 2013	ST-15b

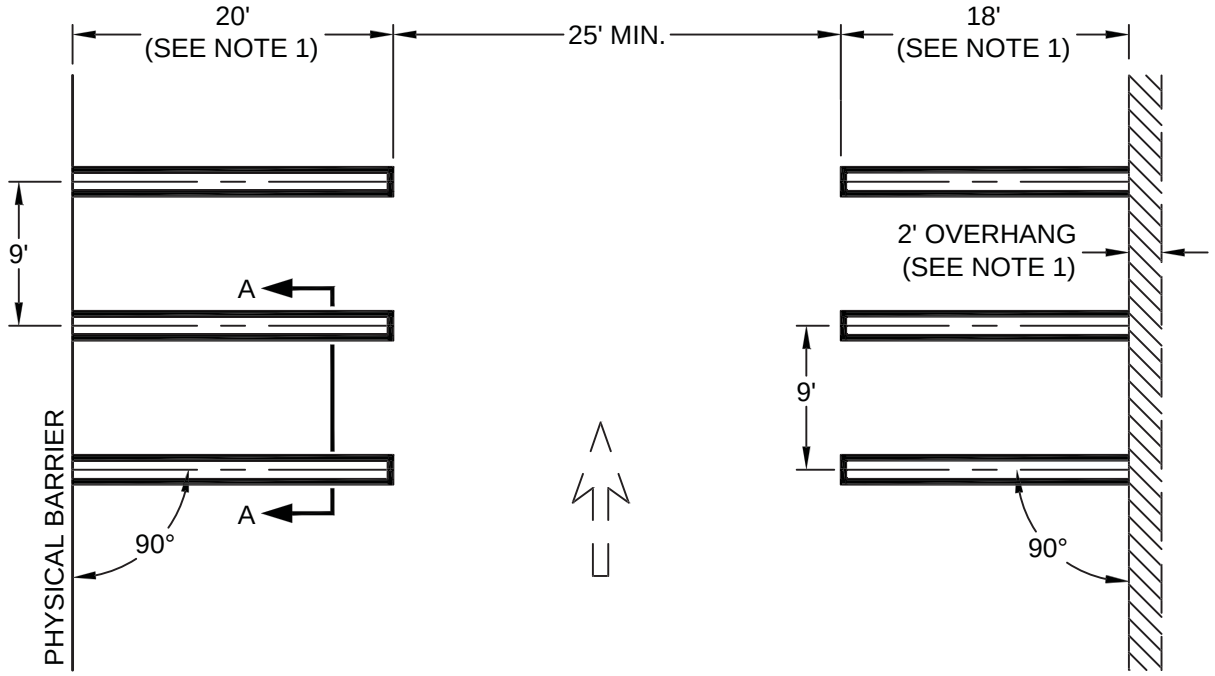

NO OVERHANG **WITH OVERHANG**

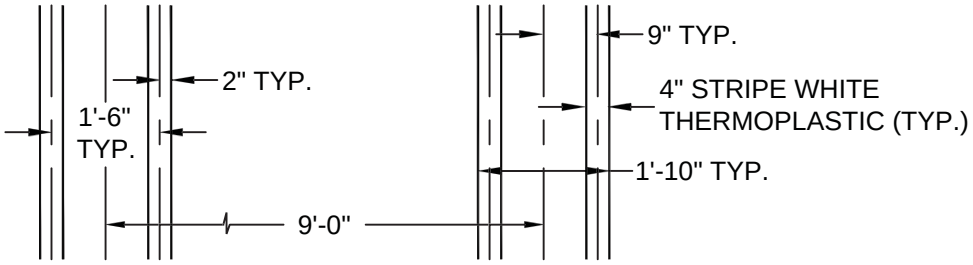

DETAIL A-A

NOTES:

1. PARKING STALL SHALL BE 18' IN LENGTH IN CASES WHERE A 2' OVERHANG AREA IS AS DESIGNED OR AVAILABLE SUCH AS SIDEWALK, LANDSCAPE AND OTHER LOW SURFACING. WHERE THERE IS A PHYSICAL BARRIER SUCH AS A WALL, TALL PLANTER OR A PROPERTY LINE, LENGTH SHALL BE 20'.

2. VEHICLES SHALL NOT BE PERMITTED TO OVERHANG PLANTERS AND/OR SIDEWALKS UNLESS THEY ARE 2' WIDER THAN REQUIRED BY THE CITY OF BRENTWOOD MUNICIPAL CODE. IF PLANTER AND/OR SIDEWALK WIDTHS ARE AS REQUIRED BY THE CODE, WHEEL-STOPS SHALL BE INSTALLED.

(Not To Scale)

PUBLIC WORKS DEPARTMENT

THE CITY OF BRENTWOOD

TYPICAL 90° PARKING STALL LAYOUT

BALWINDER S. GREWAL CITY ENGINEER

DATE: JUNE 16, 2003

REVISED: DEC. 31, 2013

SHEET No. **ST-15c**

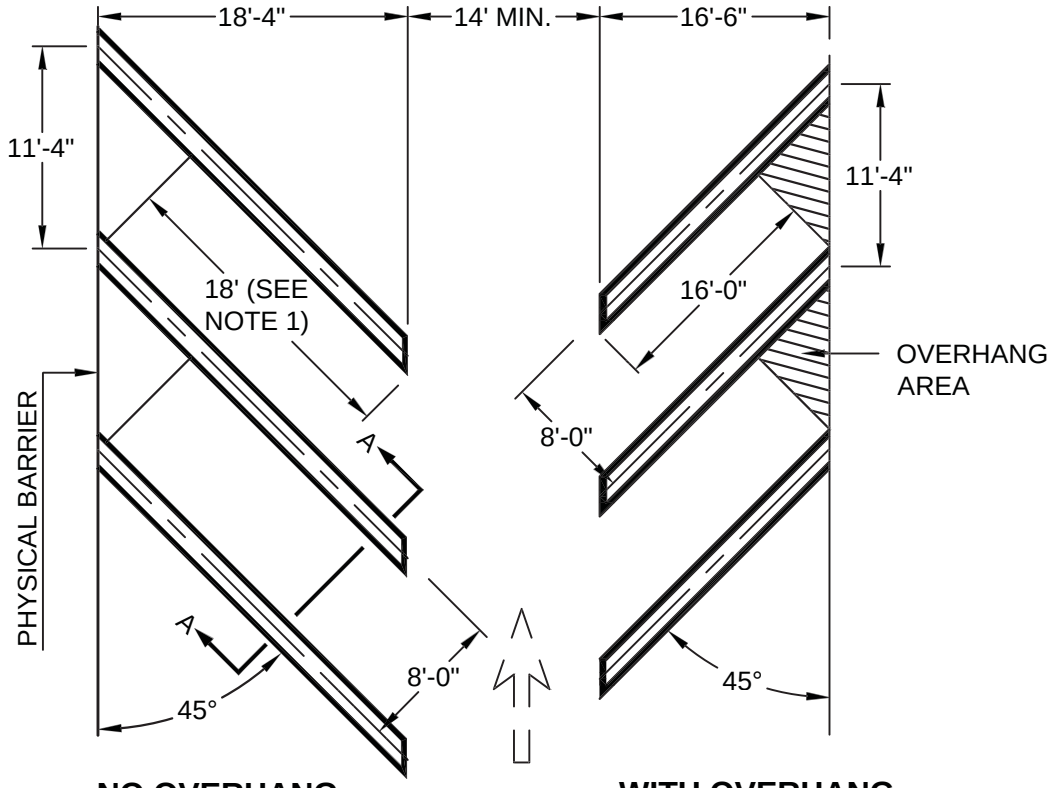

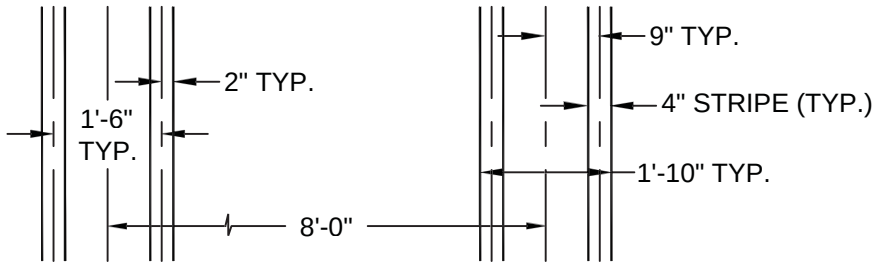

DETAIL A-A

NOTES:

1. PARKING STALL SHALL BE 16' IN LENGTH IN CASES WHERE A 2' OVERHANG AREA IS AS DESIGNED OR AVAILABLE SUCH AS SIDEWALK, LANDSCAPE AND OTHER LOW SURFACING. WHERE THERE IS A PHYSICAL BARRIER SUCH AS A WALL, TALL PLANTER OR A PROPERTY LINE, LENGTH SHALL BE 18'.

2. VEHICLES SHALL NOT BE PERMITTED TO OVERHANG PLANTERS AND/OR SIDEWALKS UNLESS THEY ARE 2' WIDER THAN REQUIRED BY THE CITY OF BRENTWOOD MUNICIPAL CODE. IF PLANTER AND/OR SIDEWALK WIDTHS ARE AS REQUIRED BY THE CODE, WHEEL-STOPS SHALL BE INSTALLED.

(Not To Scale)

REGISTERED PROFESSIONAL ENGINEER
BALWINDER S. GREWAL
C 49122
EXP. 9/30/14
STATE OF CALIFORNIA

PUBLIC WORKS DEPARTMENT

THE CITY OF BRENTWOOD

TYPICAL ANGLED COMPACT PARKING STALL LAYOUT

BALWINDER S. GREWAL CITY ENGINEER

DATE: JULY 31, 2003

REVISED: DEC. 31, 2013

SHEET No.
ST-15d

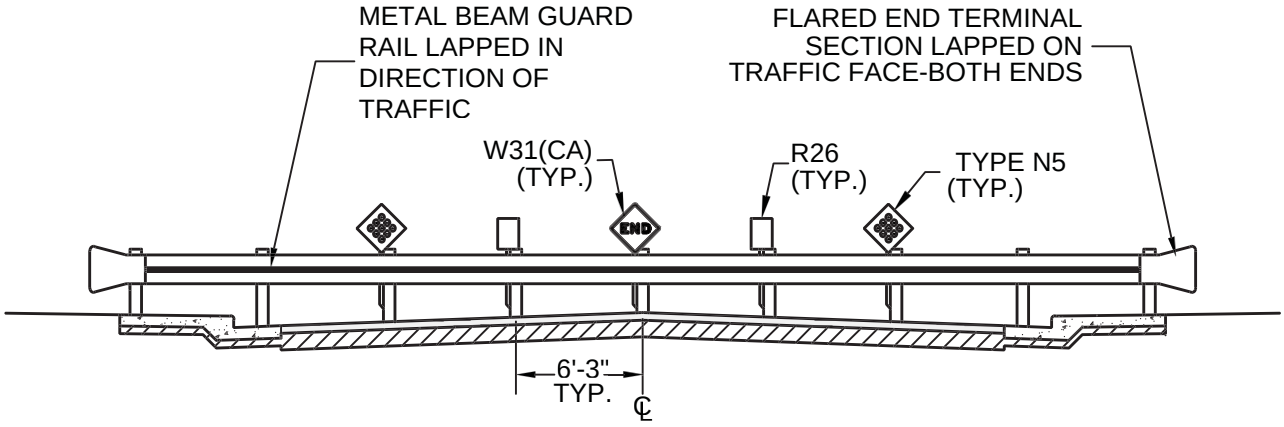

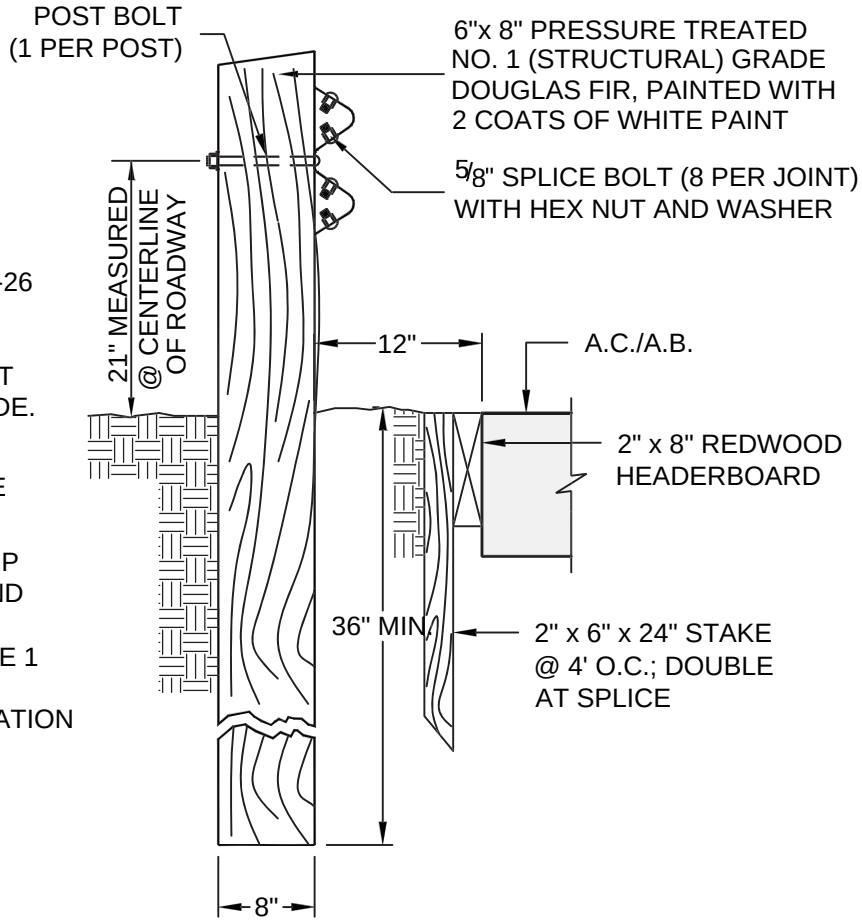

NOTES:

1. TYPE N-5 REFLECTOR AND R-26 SIGN ON A 4"x 4" REDWOOD POST, LAG BOLTED (MIN. 3 BOLTS) TO BARRICADE POST JUST BEHIND THE BARRICADE.
2. BOTTOM OF SIGNS SHALL BE EVEN WITH THE TOP OF THE GUARD RAIL.
3. THE RAIL ELEMENTS, BACK-UP PLATES, TERMINAL, END, AND RETURN SECTIONS SHALL CONFORM TO CLASS A, TYPE 1 W-BEAM GUARD RAILING AS SHOWN IN AASHTO DESIGNATION M180.

(Not To Scale)

PUBLIC WORKS DEPARTMENT

THE CITY OF BRENTWOOD

STREET BARRICADE

BALWINDER S. GREWAL CITY ENGINEER

DATE:	OCT. 31, 2000	SHEET No.
REVISED:	DEC. 31, 2013	ST-16

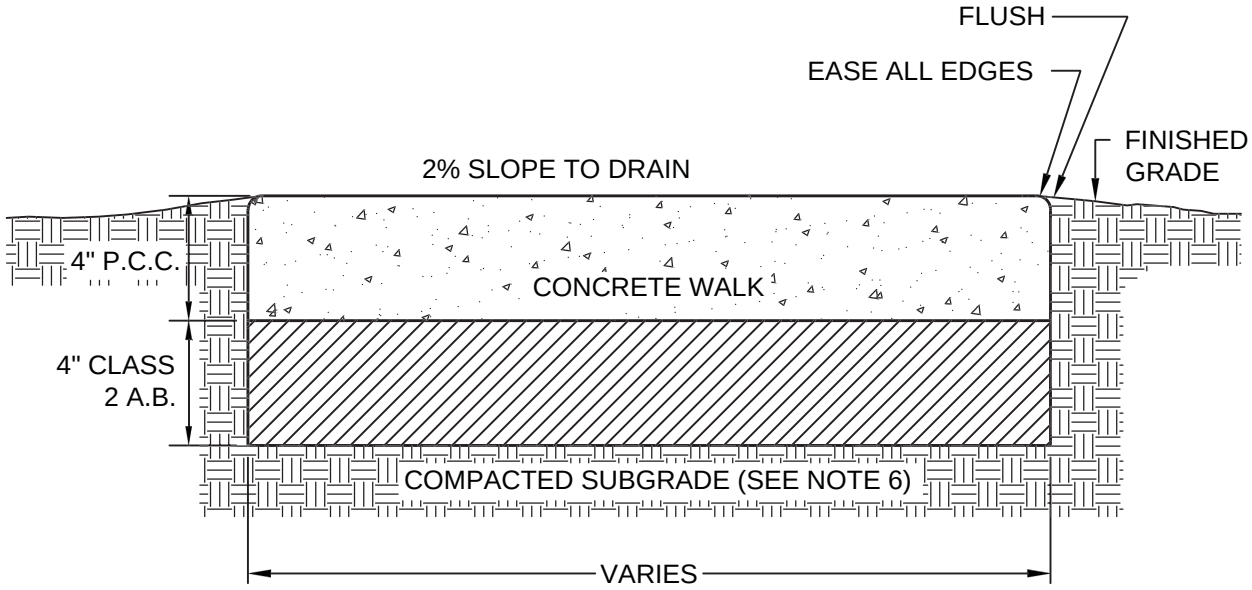

NOTES:

1. CONSTRUCT WEAKENED PLANE JOINTS ONE INCH DEEP AT 5'-0" ON CENTER.
2. CONSTRUCT EXPANSION JOINTS AT 20'-0" INTERVALS AND WHERE NEW CONCRETE JOINS EXISTING OR OTHER SURFACING.
3. ALL CONCRETE SHALL BE CLASS B, 2500 P.S.I. MINIMUM, WITH 1-1/2 LBS. FIBRILLATED POLYPROPELENE FIBERS PER CUBIC YARD.
4. BROOM-FINISH WALK AT RIGHT ANGLES.
5. ALL CONCRETE SHALL HAVE A MINIMUM 4" CUSHION OF CLASS 2 A.B. @ 95% RELATIVE COMPACTION (D1557-78) ON COMPACTED SUB-GRADE. THE USE OF RECYCLED A.B. SHALL NOT BE ALLOWED.
6. SUBGRADE SHALL BE SCARIFIED AND COMPACTED TO 95%.

(Not To Scale)

REGISTERED PROFESSIONAL ENGINEER
BALWINDER S. GREWAL
C 49122
EXP. 9/30/14
STATE OF CALIFORNIA

PUBLIC WORKS DEPARTMENT

THE CITY OF BRENTWOOD

CONCRETE WALKWAY DETAIL

BALWINDER S. GREWAL CITY ENGINEER

DATE:	AUG. 15, 2003	SHEET No.
REVISED:	DEC. 31, 2013	ST-17

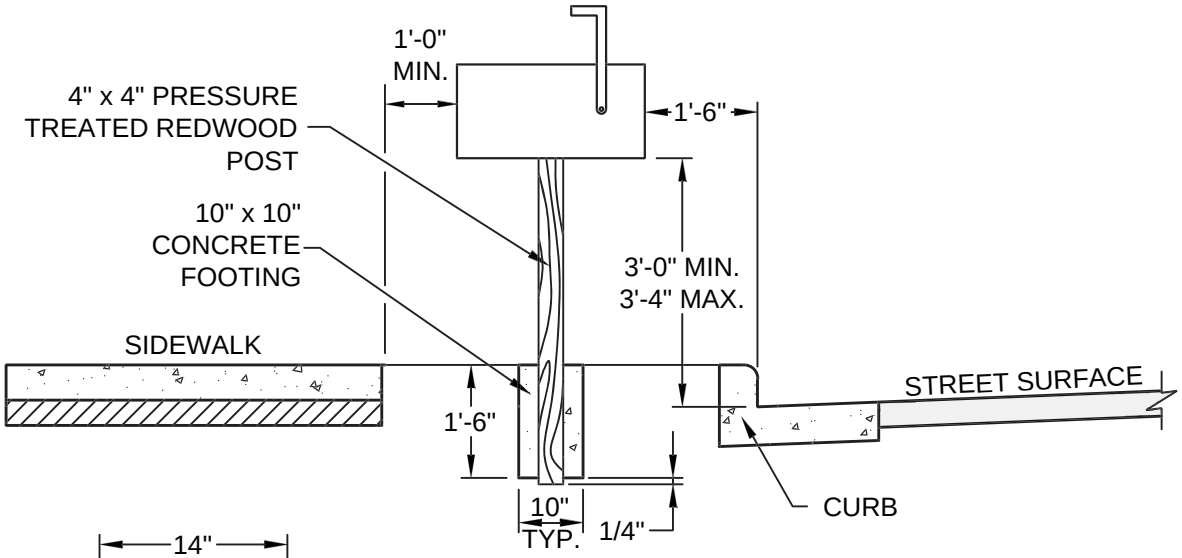

DETACHED CURB AND SIDEWALK

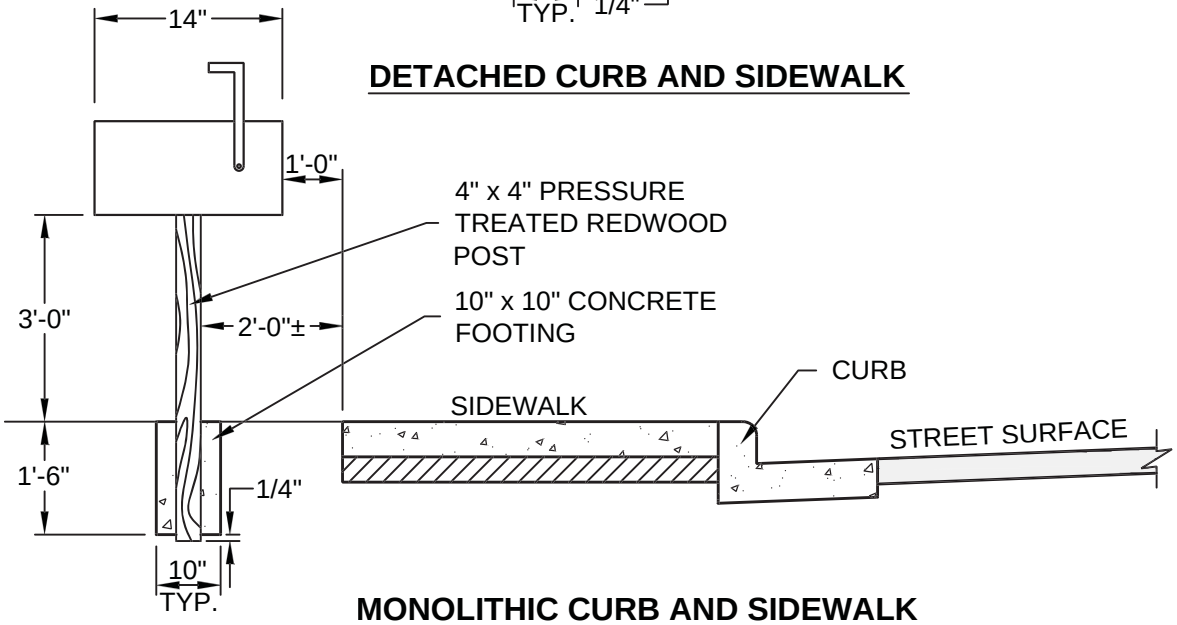

MONOLITHIC CURB AND SIDEWALK

NOTES:

1. MAINTAIN A MINIMUM 3'-0" HORIZONTAL CLEARANCE FROM FIRE HYDRANT TO NEAREST EDGE OF MAILBOX.
2. MAILBOX LOCATION SHALL BE SUCH AS TO NOT OVERHANG UTILITY OR WATER METER BOXES.
3. MAILBOX CLUSTERS, AND LOCATIONS, ARE SUBJECT TO POSTAL REGULATIONS AS SAID REGULATIONS OCCUR.

(Not To Scale)

REGISTERED PROFESSIONAL ENGINEER
BALWINDER S. GREWAL
C 49122
EXP. 9/30/14
STATE OF CALIFORNIA

PUBLIC WORKS DEPARTMENT

THE CITY OF BRENTWOOD

MAILBOX LOCATION

BALWINDER S. GREWAL CITY ENGINEER

DATE: NOV. 30, 1998
REVISED: DEC. 31, 2013

SHEET No.
ST-18

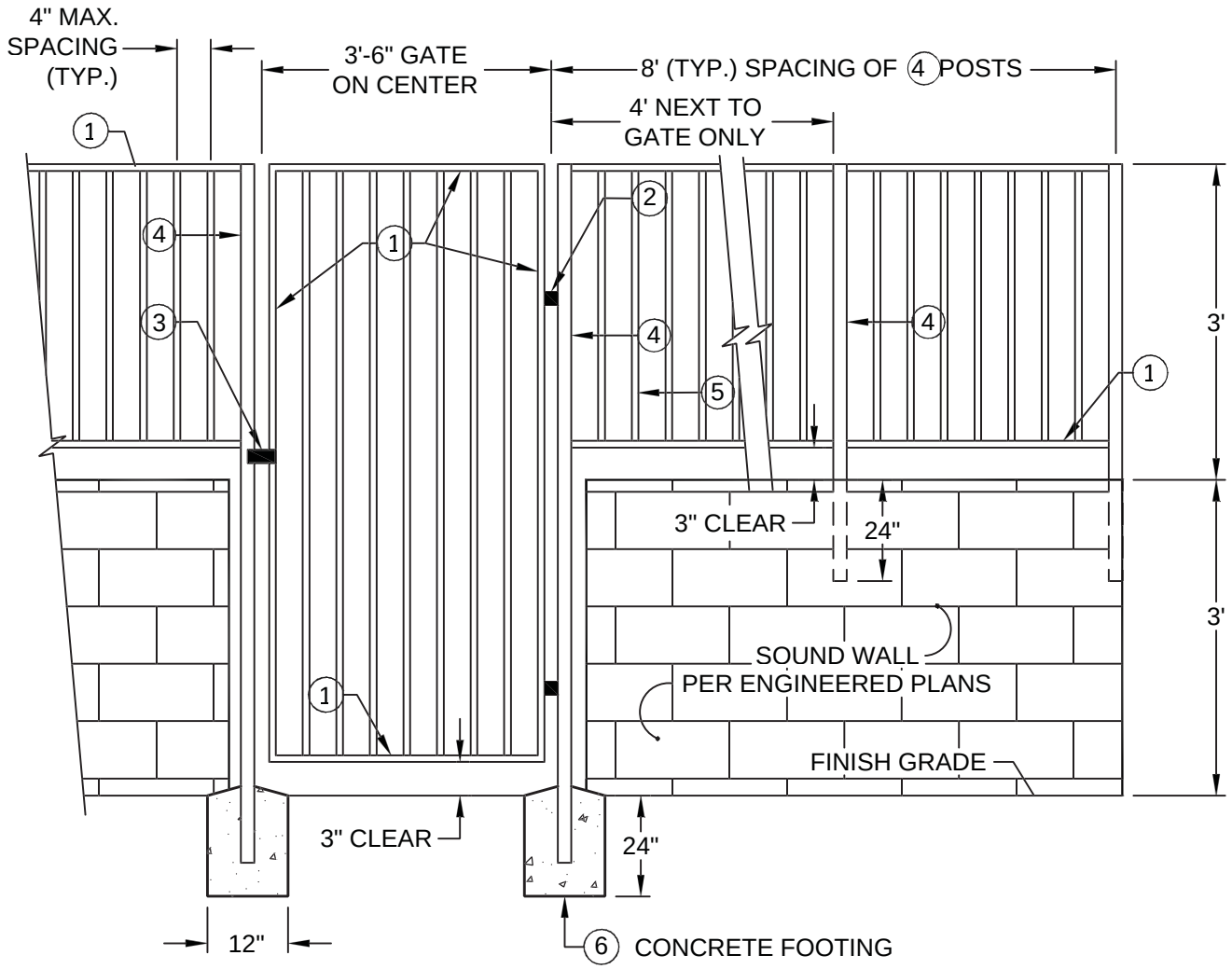

LEGEND:

1. 1-1/2" SQUARE TUBULAR STEEL FRAME (TOP, BOTTOM & SIDE RAILS), WELDED ALL SIDES
2. 3/4" ONE WAY, SELF-CLOSING HINGES, OPENING TOWARDS STREET
3. SELF-CLOSING BAR LATCH INCLUDING LOCK HASP, WELDED TO FRAME AND POST
4. 2-1/2" SQUARE TUBULAR POST, WELDED ALL SIDES
5. 5/8" TUBULAR STEEL PICKETS, WELDED ALL SIDES
6. CLASS A CONCRETE FOOTING, 2500 PSI MINIMUM

NOTES:

1. ALL WELDS SHALL BE GROUND SMOOTH.
2. ALL STEEL SHALL BE PAINTED WITH 1 COAT PRIMER, 2 COATS BLACK POLYURETHENE AND 2 COATS HIGH-GLOSS TNEMIC PAINT (OR APPROVED EQUAL).

(Not To Scale)

REGISTERED PROFESSIONAL ENGINEER
BALWINDER S. GREWAL
C 49122
EXP. 9/30/14
STATE OF CALIFORNIA

PUBLIC WORKS DEPARTMENT

THE CITY OF BRENTWOOD

IRON FENCE AND GATE

BALWINDER S. GREWAL CITY ENGINEER

DATE:	JUNE 16, 2003	SHEET No.
REVISED:	DEC. 31, 2013	ST-19a

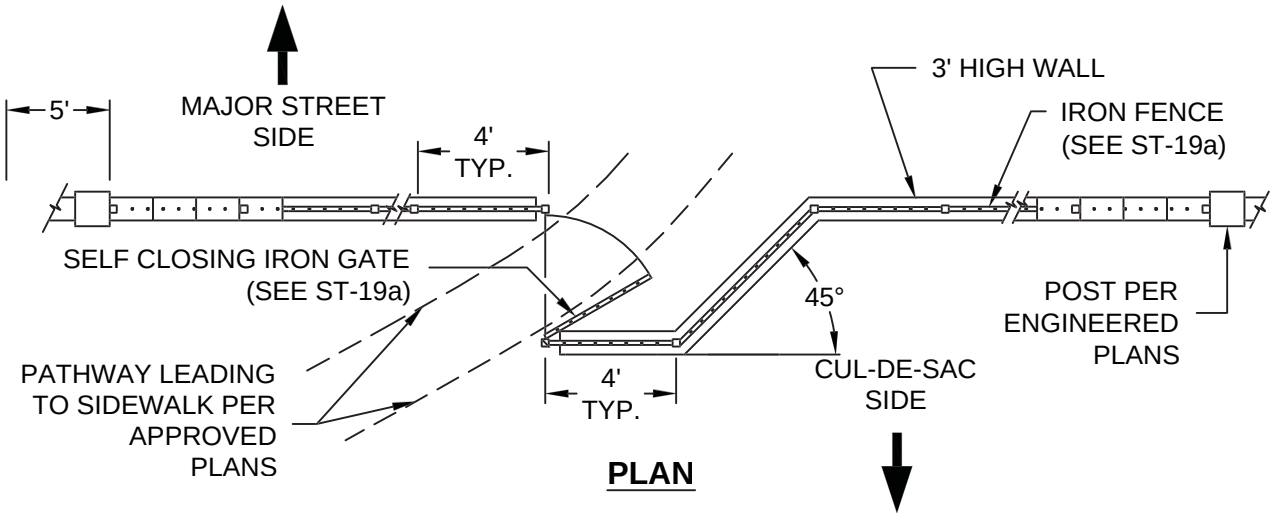

PLAN

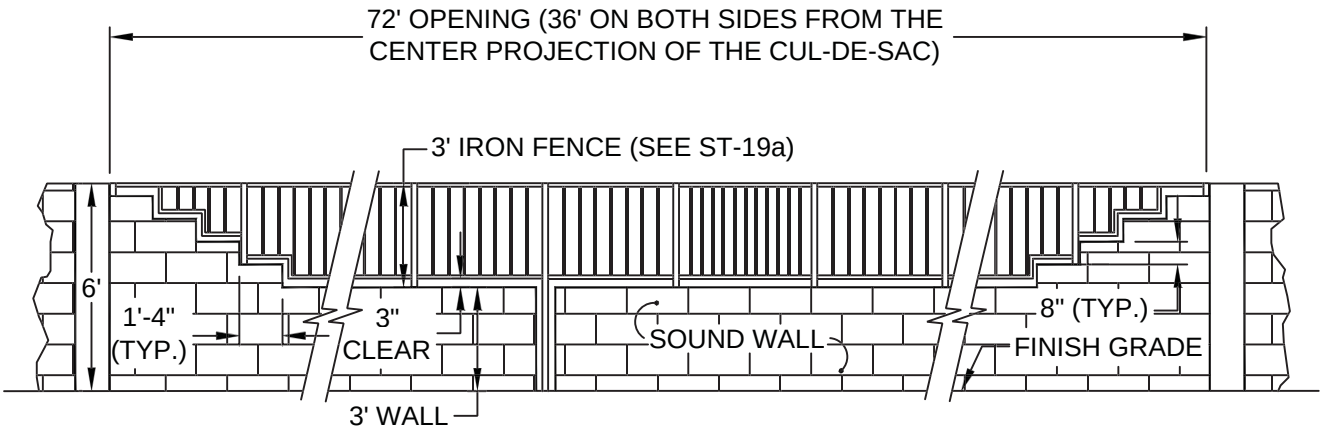

ELEVATION

NOTES:

1. THIS STANDARD SHALL BE USED ON CUL-DE SACS BACKING ON A MAJOR STREET.
2. SEE ST-19a FOR THE IRON FENCE AND GATE DETAIL.
3. SOUND WALL SHALL BE PER APPROVED ENGINEERED PLANS.

(Not To Scale)

REGISTERED PROFESSIONAL ENGINEER
BALWINDER S. GREWAL
C 49122
EXP. 9/30/14
STATE OF CALIFORNIA

PUBLIC WORKS DEPARTMENT

THE CITY OF BRENTWOOD

OPEN-ENDED CUL-DE-SAC FENCE AND WALL

BALWINDER S. GREWAL — CITY ENGINEER

DATE:	MAR. 23, 2001	SHEET No.
REVISED:	DEC. 31, 2013	ST-19b

NOTE:

* - IN THE SCHOOL VICINITY, CONSULT THE CITY TRAFFIC ENGINEER.

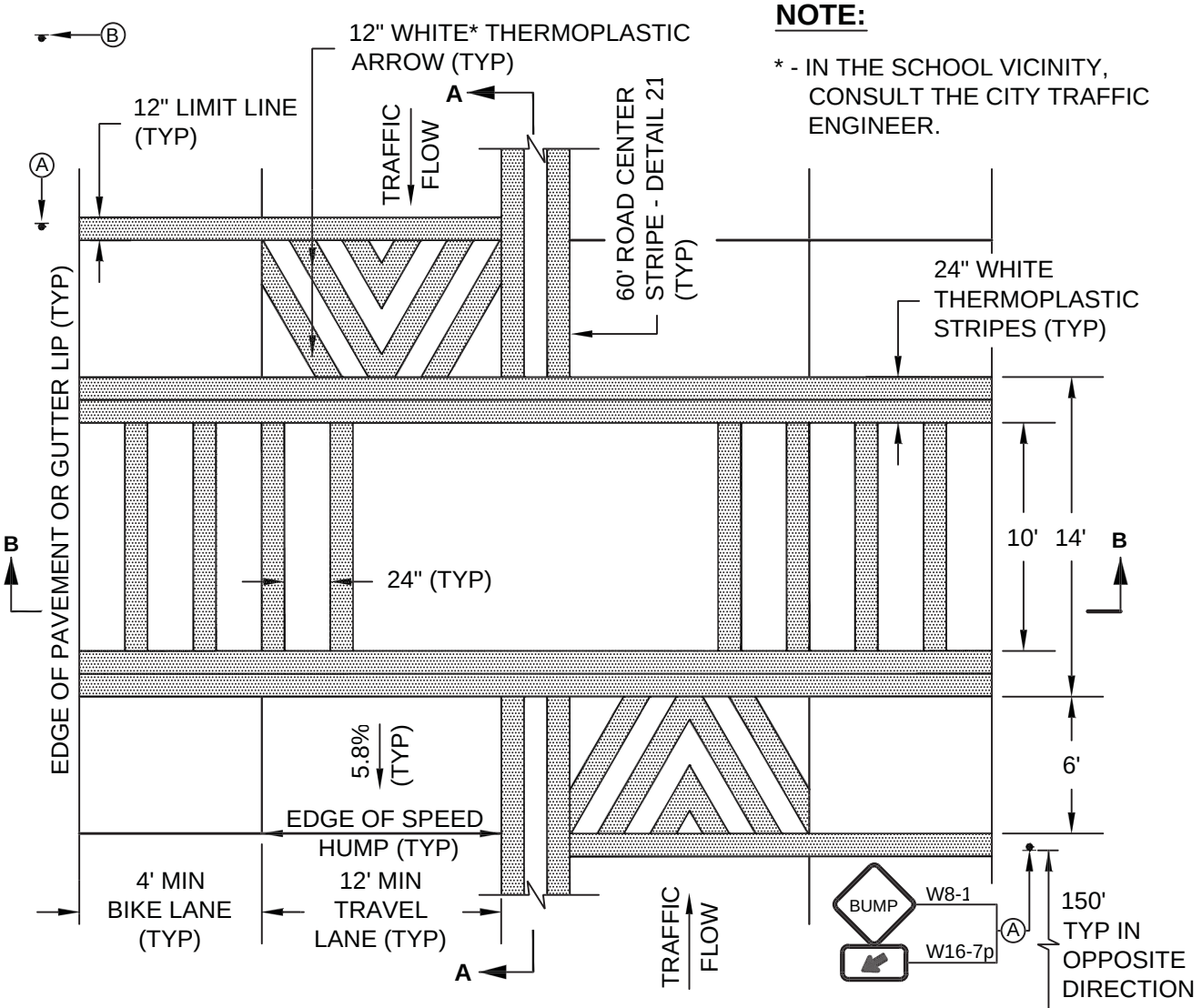

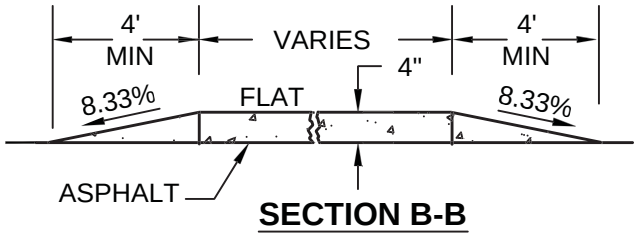

SECTION B-B

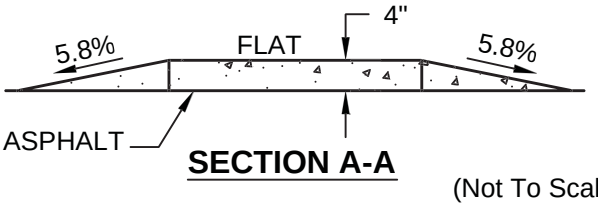

SECTION A-A

(Not To Scale)

REGISTERED PROFESSIONAL ENGINEER
BALWINDER S. GREWAL
C 49122
EXP. 9/30/14
STATE OF CALIFORNIA

PUBLIC WORKS DEPARTMENT

THE CITY OF BRENTWOOD

SPEED TABLE CROSSWALK

BALWINDER S. GREWAL CITY ENGINEER

DATE: APR. 27, 2010

REVISED: DEC. 31, 2013

SHEET No.

ST-20

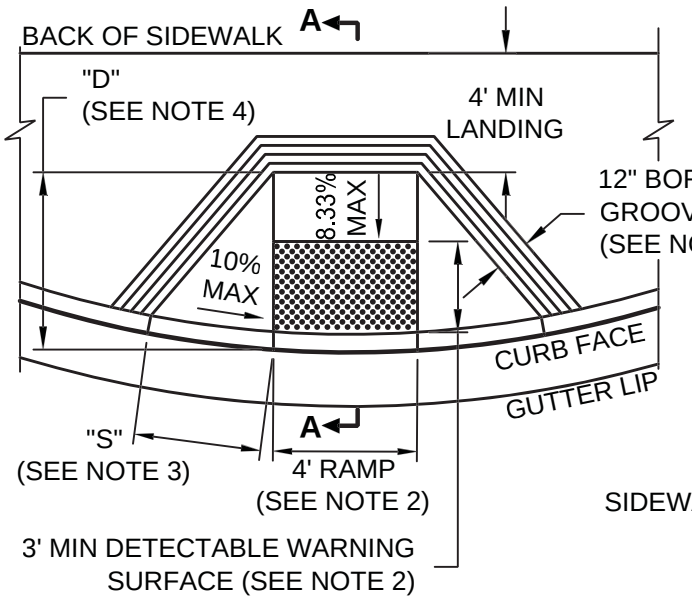

TYPE "A"

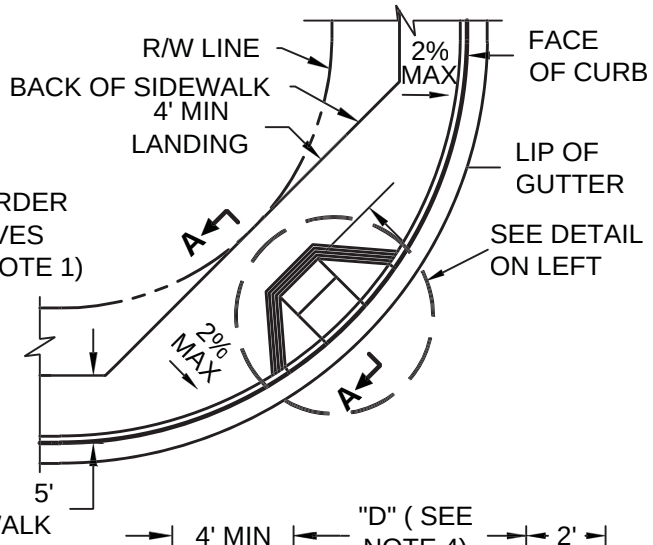

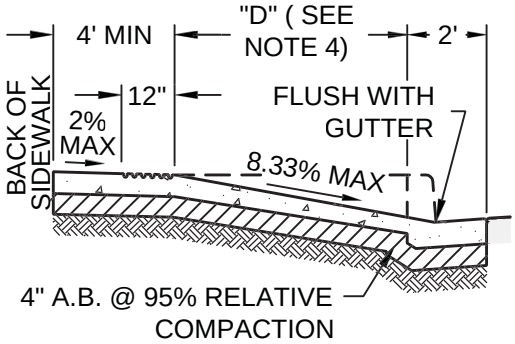

SECTION A-A

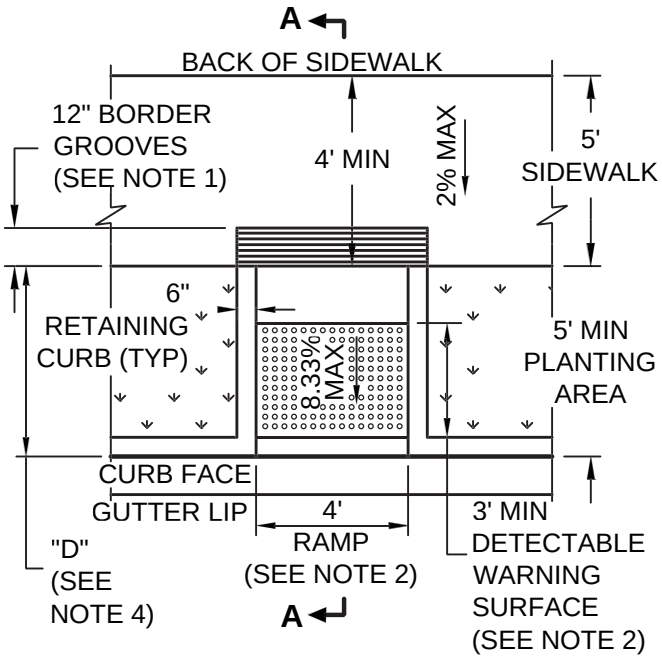

TYPE "B"

NOTES:

1. CURB RAMPS SHALL HAVE A 12" WIDE BORDER WITH ¼" GROOVES APPROX ¾" O.C. AT THE LEVEL OF THE SIDEWALK. SEE GROOVING DETAIL ON ST-21c.
2. CURB RAMPS SHALL HAVE A DETECTABLE WARNING SURFACE. SEE HANDICAP RAMP DETAILS ON ST-21c AND NOTE 11 ON ST-21d.
3. "S"=SLOPE DISTANCE (SEE TABLE ON ST-21d).
4. "D"=RAMP LENGTH (SEE TABLE ON ST-21d).
5. SEE ST-21d AND ST-21e FOR ADDITIONAL HANDICAP NOTES.

(Not To Scale)

REGISTERED PROFESSIONAL ENGINEER
BALWINDER S. GREWAL
C 49122
EXP. 9/30/14
STATE OF CALIFORNIA

PUBLIC WORKS DEPARTMENT

THE CITY OF BRENTWOOD

HANDICAP RAMP TYPE "A" AND "B"

BALWINDER S. GREWAL CITY ENGINEER

DATE:	JULY 22, 2008	SHEET No.
REVISED:	DEC. 31, 2013	ST-21a

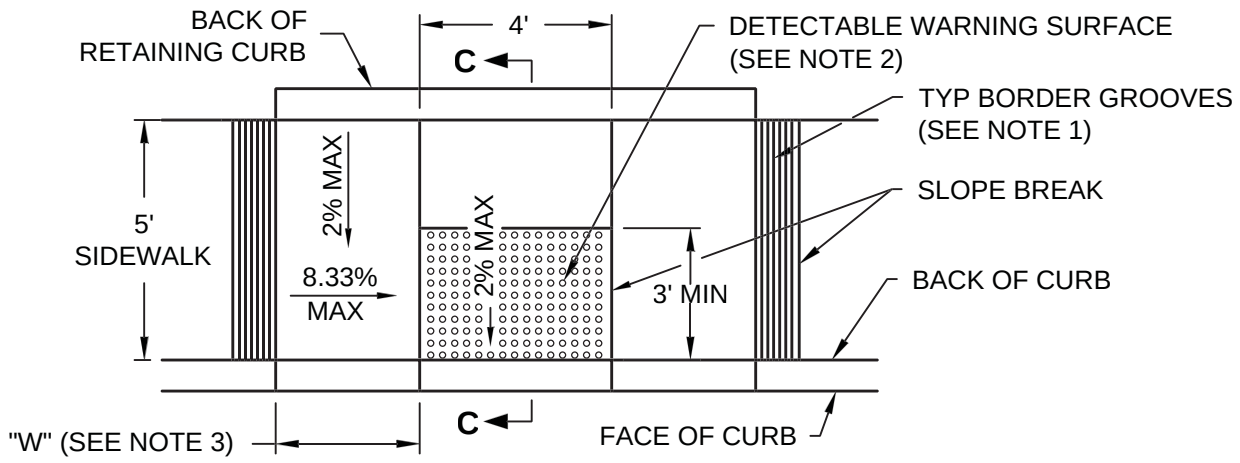

TYPE "C"

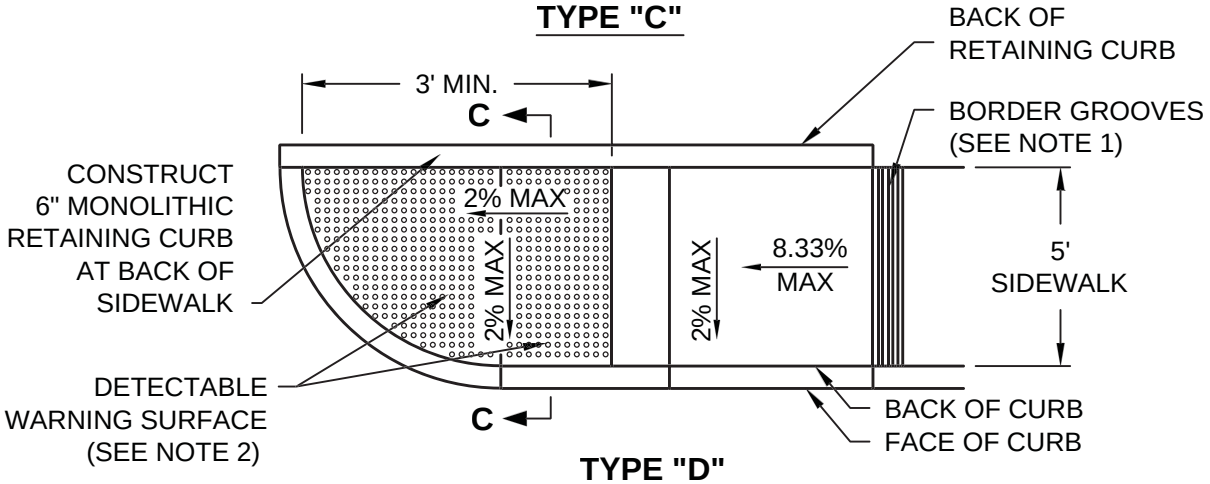

TYPE "D"

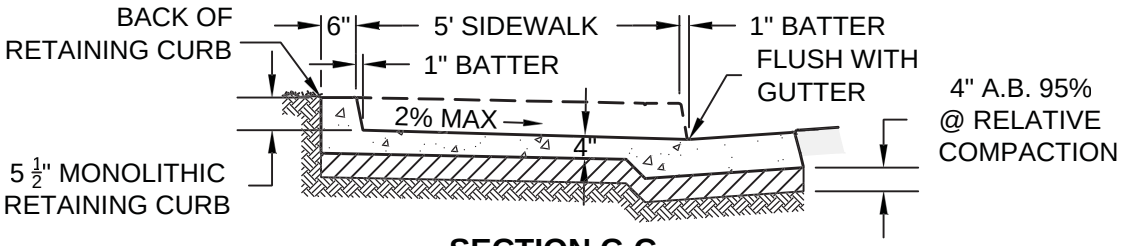

SECTION C-C

NOTES:

1. CURB RAMPS SHALL HAVE A 12" WIDE BORDER WITH 1/4" GROOVES APPROX 3/4" O.C. AT LEVEL SURFACE OF THE SIDEWALK. SEE GROOVING DETAIL ON ST-21c.
2. CURB RAMPS SHALL HAVE A DETECTABLE WARNING SURFACE. SEE NOTE 11 ON ST-21d FOR DETECTABLE WARNING SURFACES AND TRUNCATED DOME GENERAL INFORMATION.
3. "W" = CURB HEIGHT MAX SLOPE DIMENSION (SEE TABLE ON ST-21d).
4. SEE ST-21d & ST-21e FOR ADDITIONAL HANDICAP RAMP NOTES.

(Not To Scale)

PUBLIC WORKS DEPARTMENT

THE CITY OF BRENTWOOD

HANDICAP RAMP TYPE "C" AND "D"

BALWINDER S. GREWAL CITY ENGINEER

DATE:	JULY 22, 2008	SHEET No.
REVISED:	DEC. 31, 2013	ST-21b

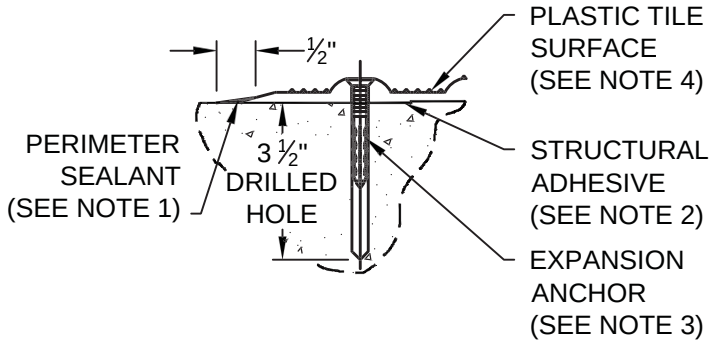

SURFACE APPLIED TILE INSTALLATION

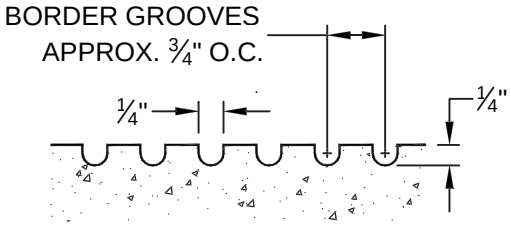

GROOVING DETAIL

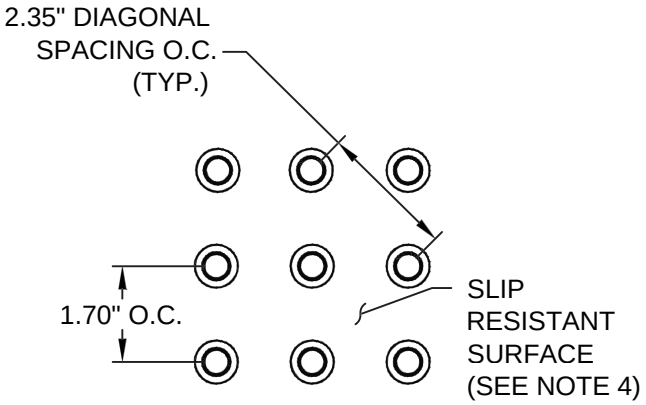

RAISED TRUNCATED DOME PATTERN

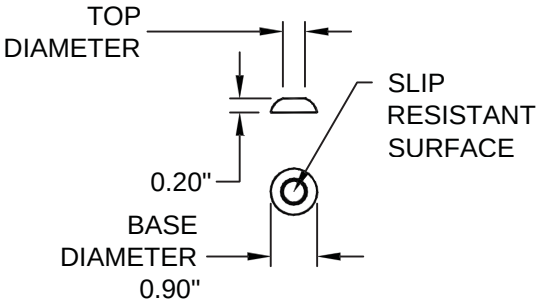

RAISED TRUNCATED DOME

NOTES:

1. APPLY PERIMETER SEALANT AT PERIMETER OF PLASTIC TILE AFTER FASTENING. TOOL SMOOTH TO BLEND TILE EDGE WITH ADJACENT SURFACE.
2. STRUCTURAL ADHESIVE AT FULL PERIMETER AND THROUGH CENTER OF PLASTIC TILE EACH WAY.
3. ¼" x 1 ½" LG COLOR MATCHED EXPANSION ANCHOR PART NO. ADA-S-FASTN 12" O.C.
4. SLIP RESISTANT PLASTIC TILE SURFACE. PLASTIC TILES WITH A MIN. OF 40 POINTS PER SQUARE INCH.
5. SEE ST-21d & ST-21e FOR ADDITIONAL HANDICAP RAMP NOTES.

(Not To Scale)

PUBLIC WORKS DEPARTMENT

THE CITY OF BRENTWOOD

HANDICAP RAMP DETAILS

BALWINDER S. GREWAL CITY ENGINEER

DATE:	APRIL 27, 2007	SHEET No.
REVISED:	DEC. 31, 2013	ST-21c

CURB HEIGHT	RAMP LENGTH "D"	DISTANCE "S"	SLOPE "W"
4"	4.6'	3.33'	4.0'
5"	5.9'	4.17'	5.0'
6"	7.2'	5.0'	6.0'
7"	8.6'	5.83'	7.0'
8"	9.9'	6.66'	8.0'

CURB HEIGHT SLOPE DIMENSIONS TABLE

NOTES:

1. HANDICAP RAMPS SHALL BE CONSTRUCTED AT MIDPOINT OF CURB RETURNS.
2. ALL CONCRETE SHALL BE CLASS B, 2500 P.S.I. MINIMUM, WITH 1 ½ LBS. FIBRILLATED POLYPROPYLENE FIBERS PER CUBIC YARD.
3. ALL CONCRETE SHALL HAVE A MINIMUM 4" CUSHION OF CLASS 2 A.B. @ 95% RELATIVE COMPACTION (D1557-78) ON COMPACTED SUB-GRADE. THE USE OF RECYCLED A.B. SHALL NOT BE ALLOWED.
4. RAMPS SHALL HAVE HEAVY BROOM FINISH TRANSVERSE TO THE SLOPE OF THE RAMP.
5. CONSTRUCT DEEP SCORE LINES AT LEADING EDGE OF TACTILE STRIPS.
6. CROSSWALKS SHALL BE STRIPED CENTERED ON THE LANDING OF THE HANDICAP RAMP.
7. CURB RAMP SIDE SLOPE VARIES UNIFORMLY TO A MAXIMUM OF 10% AT CURB TO CONFORM WITH LONGITUDINAL SIDEWALK SLOPE ADJACENT TO TOP OF RAMP, EXCEPT IN TYPE 'C' OR 'D'
8. UTILITY PULL BOXES, MANHOLES, VAULTS, AND ALL OTHER UTILITY FACILITIES WITHIN THE BOUNDARIES OF THE CURB RAMP WILL BE RELOCATED BY OTHERS PRIOR TO, OR IN CONJUNCTION WITH, CURB RAMP CONSTRUCTION.
9. DOWEL CURB RAMPS AT ALL COLD JOINTS IN EXISTING CONCRETE WITH #3 REBARS 12" LONG 36" INTERVALS. DRIVE TIGHT FIT OR EPOXY. EXPANSION JOINTS AND/OR WEAKENED PLANE JOINTS SHALL SEPARATE CURB RAMPS IN NEW CONCRETE CONSTRUCTION.
10. ALL SLOPES RELATIVE TO EXISTING STREET GRADES.
11. GENERAL NOTES ON TRUNCATED DOMES:
    A. WHEELCHAIR CURB CUT RAMPS SHALL HAVE A PREFABRICATED DETECTABLE WARNING SURFACE INSTALLED ON RAMP SURFACE CONSISTING OF TILE(S) WITH RAISED TRUNCATED DOMES CONFORMING TO THE DETAILS ON THIS STANDARD PLAN AND SHALL BE IN CONFORMANCE WITH THE REQUIREMENTS ESTABLISHED BY THE DEPARTMENT OF GENERAL SERVICES, DIVISION OF STATE ARCHITECT; AND THE AMERICAN WITH DISABILITIES ACT (TITLE 49 CFR TRANSPORTATION, PART 37.9 STANDARDS FOR ACCESSIBLE TRANSPORTATION FACILITIES, APPENDIX A, SECTION 4.29.2 DETECTABLE WARNINGS ON WALKING SURFACES) AND SHALL BE CAST IN PLACE IN CONFORMANCE WITH THE MANUFACTURER'S CAST IN PLACE RECOMMENDATIONS.
    B. DETECTABLE WARNING SURFACE SHALL EXTEND THE FULL WIDTH AND 3' DEPTH OF THE RAMP. THE EDGE OF THE DETECTABLE WARNING SURFACE NEAREST THE STREET SHALL BE BETWEEN 6" AND 8" FROM THE GUTTER FLOWLINE. WHEN A DETECTABLE SURFACE EDGE AND/OR DOMES IS CUT AND THE RESULTING EDGE IS NOT FLUSH WITH THE SURFACE OF THE RAMP, THE EDGE SHALL BE BEVELED OR CONFORMED WITH PERIMETER SEALANT AT 1:2 MAX. SLOPE IN ACCORDANCE WITH THE MANUFACTURER'S REQUIREMENTS.

(Not To Scale)

REGISTERED PROFESSIONAL ENGINEER
BALWINDER S. GREWAL
C 49122
EXP. 9/30/14
STATE OF CALIFORNIA

PUBLIC WORKS DEPARTMENT

THE CITY OF BRENTWOOD

HANDICAP RAMP NOTES-1

BALWINDER S. GREWAL CITY ENGINEER

DATE: APRIL 27, 2007
REVISED: DEC. 31, 2013

SHEET No.
ST-21d

NOTES:

12. MANUFACTURER(S) WARRANTY ON TRUNCATED DOMES:
    MANUFACTURER(S) SHALL PROVIDE A WRITTEN 5-YEAR WARRANTY FOR PREFABRICATED DETECTABLE WARNING SURFACES, GUARANTEEING REPLACEMENT WHEN THERE IS DEFECT IN THE DOME SHAPE, COLOR FASTNESS, SOUND-ON-CANE ACOUSTIC QUALITY, RESILIENCE, OR ATTACHMENT. WARRANTY PERIOD SHALL BEGIN UPON ACCEPTANCE OF WORK.
13. TRUNCATED DOMES SPECIFICATIONS:
    A. PLASTIC TILES SHALL BE "ARMOR TILE" AS MANUFACTURED BY ENGINEERED PLASTICS INC., OR APPROVED EQUAL, TEL: (800) 682-2525. TILES SHALL BE A SINGLE TILE, 36" x 48" NOMINAL, MANUFACTURED OF AN EPOXY POLYMER COMPOSITE WITH AN ULTRAVIOLET STABILIZED, COLORFAST COATING EMPLOYING ALUMINUM OXIDE PARTICLES IN THE TRUNCATED CONES.
    B. COLOR SHALL BE DARK GRAY (FEDERAL COLOR #36118).
    C. THE TILE SHALL INCORPORATE AN IN-LINE PATTERN OF TRUNCATED DOMES; .20" IN HEIGHT, .90" DIAMETER AT THE BASE, AND .40" DIAMETER AT THE TOP OF DOME, SPACED 2.35" NOMINAL AS MEASURED ON A DIAGONAL AND 1.70" NOMINAL AS MEASURED SIDE BY SIDE; ROWS SHALL BE ORIENTED PARALLEL WITH RAMP DIRECTION; DOMES SHALL BE ALIGNED THROUGHOUT ENTIRE DETECTABLE SURFACE AREA.
    D. THE FIELD AREA SHALL CONSIST OF A NON-SLIP SURFACE WITH A MIN. OF 40-90 RAISED POINTS .045" HIGH, PER SQUARE INCH.
    E. THE TILE SHALL BE MANUFACTURED WITH EMBEDMENT FLANGES, 3" CENTER TO CENTER, 1" MIN. DEPTH WITH $\frac{5}{16}$" DIAMETER HOLES, 3 HOLES MIN. PER FLANGE. WHERE TILES ARE CUT, SEALANT SHALL BE WORKED UNDER THE TILE ALONG PERIMETER WHEREVER THE EMBEDMENT FLANGE IS REMOVED.
14. SURFACE APPLICATION ON TRUNCATED DOMES:
    A. UPON APPROVAL FROM THE CITY ENGINEER, RETROFIT AND UNIQUE CIRCUMSTANCES MAY APPLY TO SURFACE APPLICATION ON TRUNCATED DOMES.
    B. SURFACE APPLIED DETECTABLE TILES SHALL BE "ARMOR TILE" MANUFACTURED WITHOUT EMBEDMENT FLANGES AND THE EDGES SHALL BE BEVELED, SLOPED AT 1:2 MAX. WHEN THE DETECTABLE SURFACE EDGE AND/OR DOME IS CUT AND THE RESULTING EDGE IS NOT FLUSH WITH THE SURFACE OF THE RAMP, THE EDGE SHALL BE BEVELED OR CONFORMED WITH PERIMETER SEALANT AT 1:2 MAX. SLOPE IN ACCORDANCE WITH THE MANUFACTURER'S REQUIREMENTS.
    C. ADHESIVE: URETHANE ELECTROMETRIC ADHESIVE BY SKA CORP., UNIROYAL, MAPEI, BOSTIK, OR APPROVED EQUAL.
    D. FASTENERS: COLOR MATCHED, CORROSION RESISTANT, FLAT HEAD DRIVE ANCHOR: $\frac{1}{4}$" DIAMETER x $\frac{3}{4}$" LONG, 12" CENTER TO CENTER BOTH DIRECTIONS MIN. ARMOR-DRIVE BY ENGINEERED PLASTICS OR APPROVED EQUAL.
    E. PERIMETER SEALANT: EPOXY TWO COMPONENT SEALANT BY POWERS, SIMPSON, HILTI OR APPROVED EQUAL. ALUMINUM GRAY COLOR.

(Not To Scale)

REGISTERED PROFESSIONAL ENGINEER
BALWINDER S. GREWAL
C 49122
EXP. 9/30/14
STATE OF CALIFORNIA

PUBLIC WORKS DEPARTMENT

THE CITY OF BRENTWOOD

HANDICAP RAMP NOTES-2

BALWINDER S. GREWAL CITY ENGINEER

DATE:	APRIL 27, 2007	SHEET No.
REVISED:	DEC. 31, 2013	ST-21e

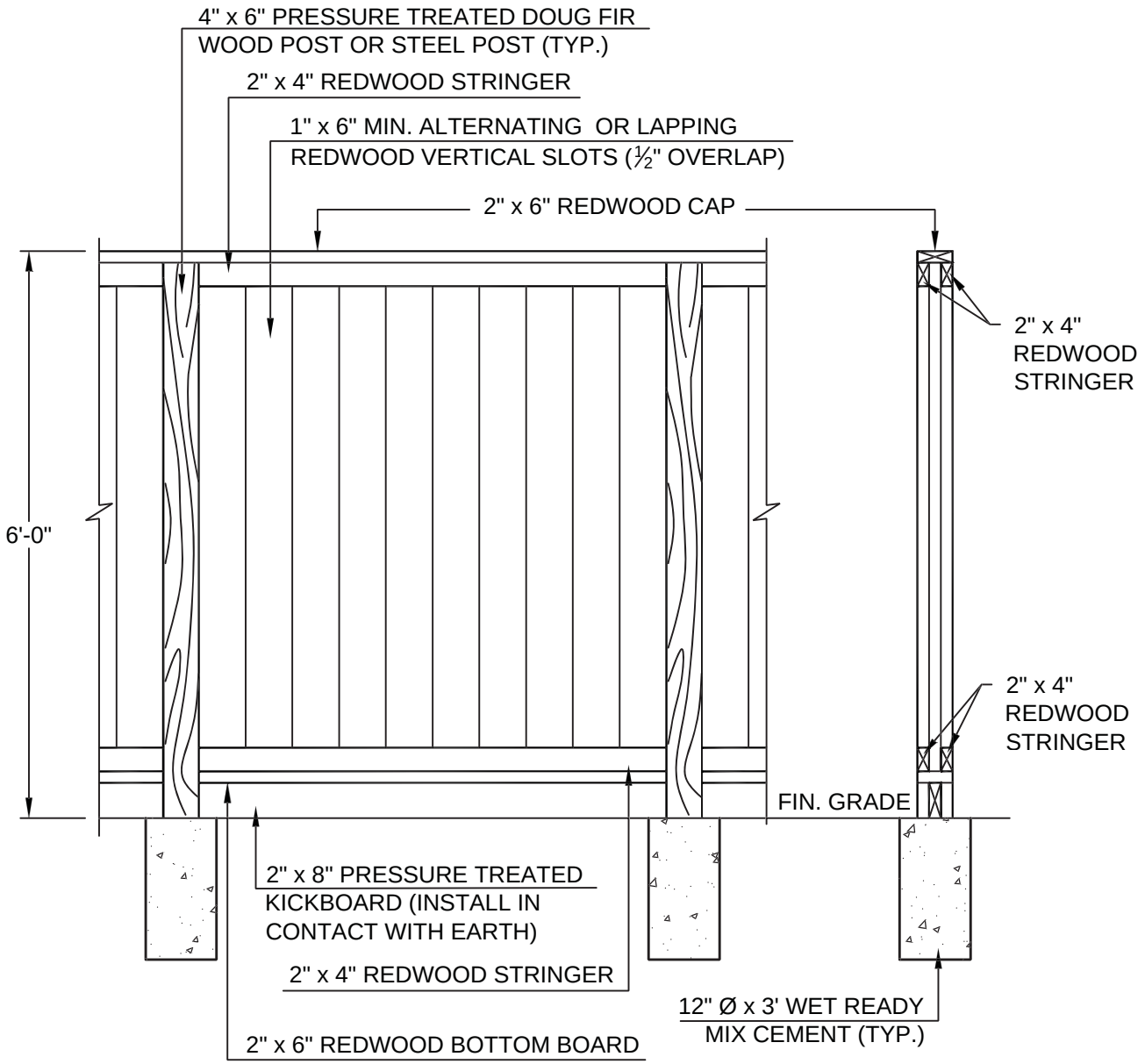

NOTES:

1. THIS STANDARD SHALL BE USED FOR ALL RESIDENTIAL PROPERTY LINE WOOD FENCING UNLESS ADDITIONAL UPGRADES ARE REQUIRED BY THE PLANNING COMMISSION.
2. FOR PARKS AND TRAILS ADJACENT TO PRIVATE PROPERTY, STANDARD PLAN L-16 SHALL BE USED.

(Not To Scale)

REGISTERED PROFESSIONAL ENGINEER
BALWINDER S. GREWAL
C 49122
EXP. 9/30/14
STATE OF CALIFORNIA

PUBLIC WORKS DEPARTMENT

THE CITY OF BRENTWOOD

STANDARD RESIDENTIAL GOOD-NEIGHBOR FENCE

BALWINDER S. GREWAL CITY ENGINEER

DATE: JUNE 20, 2003

REVISED: DEC. 31, 2013

SHEET No. ST-22

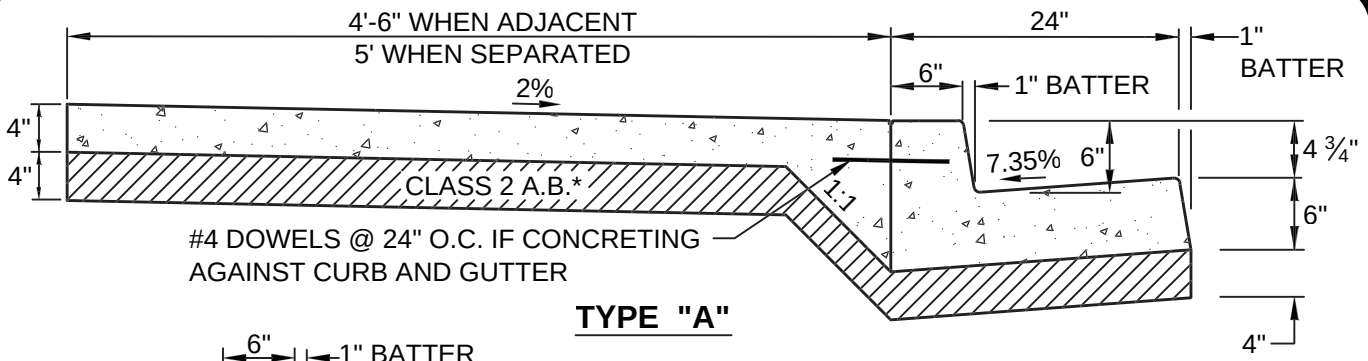

TYPE "A"

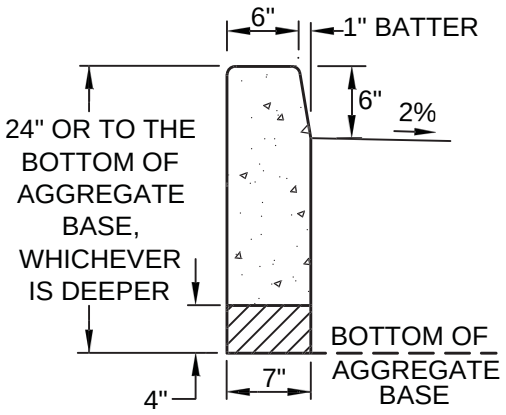

TYPE "B"

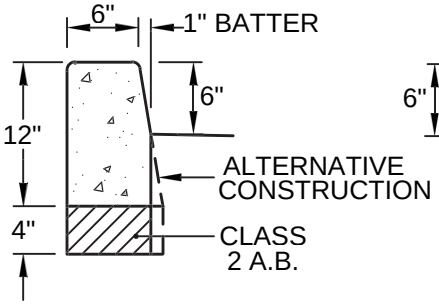

TYPE "C"

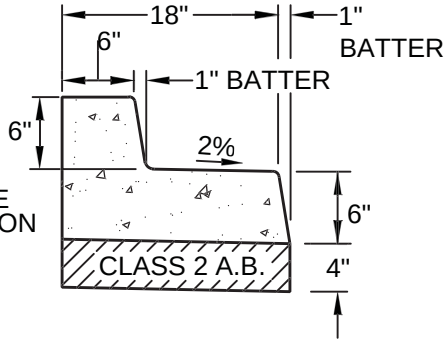

TYPE "D"
FALL AWAY GUTTER

NOTES:

1. ALL CONCRETE SHALL BE CLASS B, 2500 P.S.I. MIN., WITH 1½ LBS. FIBRILLATED POLYPROPYLENE FIBERS PER CUBIC YARD.
2. A PERFORATED DRAIN PIPE SHALL BE INSTALLED ON TYPES "A", "C" AND "D" PER CITY STANDARD ST-24.
3. ALL CURB TYPES SHALL HAVE A 1" MIN. DEEP SCORE MARK EVERY 10'. IN ADDITION, TYPE "A" SIDEWALK SHALL HAVE A ¼" x ¼" SHALLOW SCORE MARK 5' O.C. FROM THE DEEP SCORE MARK.
4. BROOM FINISH WALK AT RIGHT ANGLES TO CURB; CURB AND GUTTER PARALLEL TO STREET.
5. INSCRIBE A 3" HIGH "W" OR "S" ON TOP OF THE CURB DIRECTLY ABOVE THE WATER OR SANITARY SEWER SERVICE.
6. ALL CONCRETE SHALL HAVE A MINIMUM 4" CUSHION OF CLASS 2 A.B. AT 95% RELATIVE COMPACTION (D1557-78) ON SUB-GRADE @ 95% RELATIVE COMPACTION. THE USE OF RECYCLED CLASS 2 A.B. SHALL NOT BE ALLOWED.
7. ALL CORNERS SHALL BE FINISHED WITH A ½" RADIUS.

(Not To Scale)

PUBLIC WORKS DEPARTMENT

THE CITY OF BRENTWOOD

SIDEWALK, CURB AND GUTTER

BALWINDER S. GREWAL CITY ENGINEER

DATE:	JUNE 20, 2003	SHEET No.
REVISED:	DEC. 31, 2013	ST-23

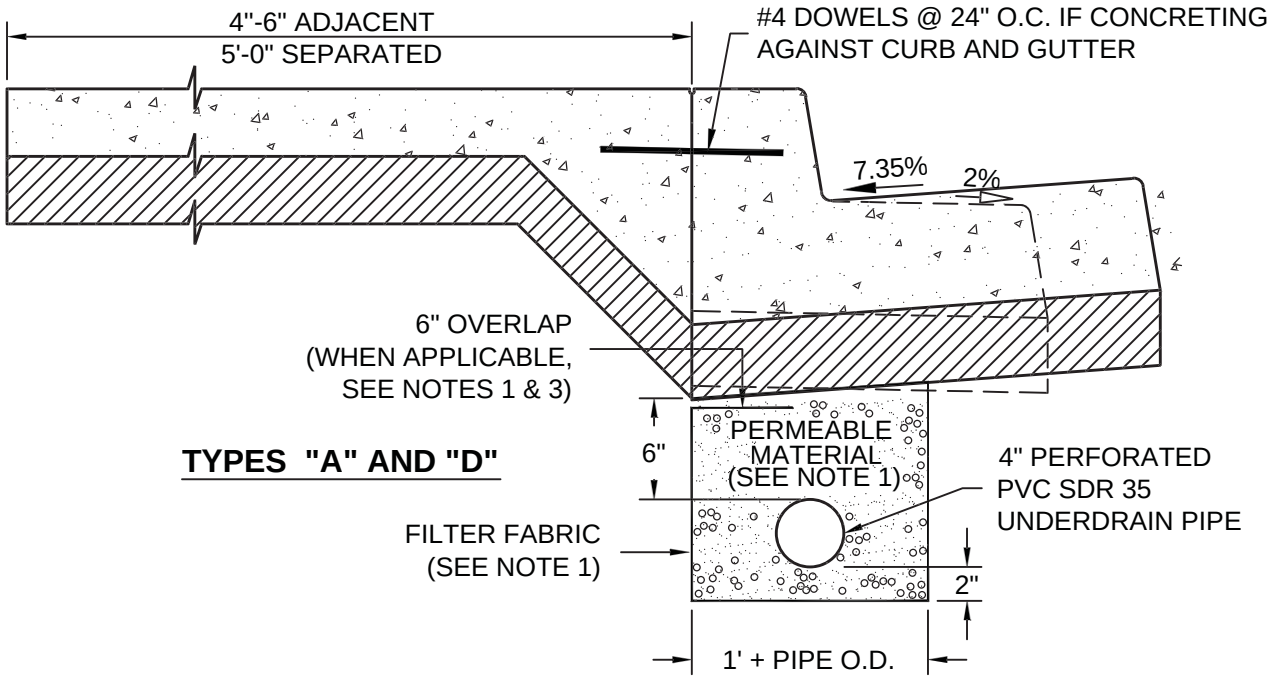

TYPES "A" AND "D"

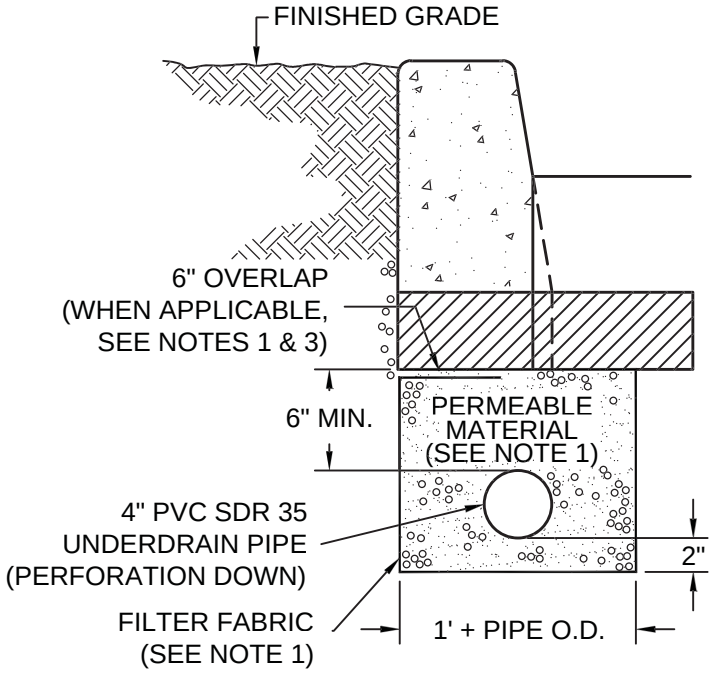

TYPE "C"

NOTES:

1. PERMEABLE MATERIAL SHALL EITHER BE CLASS 1 WITH FILTER FABRIC OR CLASS 2 WITHOUT FILTER FABRIC.
2. UNDERDRAIN PIPE, PERMEABLE MATERIAL AND FILTER FABRIC SHALL CONFORM TO THE STATE STANDARD SPECIFICATIONS, SECTION 68, "SUBSURFACE DRAINS."
3. FILTER FABRIC ENVELOPMENT AND LENGTH SHALL CONFORM TO THE STATE STANDARD SPECIFICATIONS, SECTION 88-1.03.
4. PIPE SHALL BE PERFORATED PVC SDR 35.
5. REFER TO ST-23 FOR SIDEWALK, CURB AND GUTTER TYPES.

(Not To Scale)

REGISTERED PROFESSIONAL ENGINEER
BALWINDER S. GREWAL
C 49122
EXP. 9/30/14
STATE OF CALIFORNIA

PUBLIC WORKS DEPARTMENT

THE CITY OF BRENTWOOD

SUBSURFACE DRAIN BELOW CURB AND SIDEWALK

BALWINDER S. GREWAL CITY ENGINEER

DATE: APR. 29, 2005
REVISED: DEC. 31, 2013

SHEET No.
ST-24

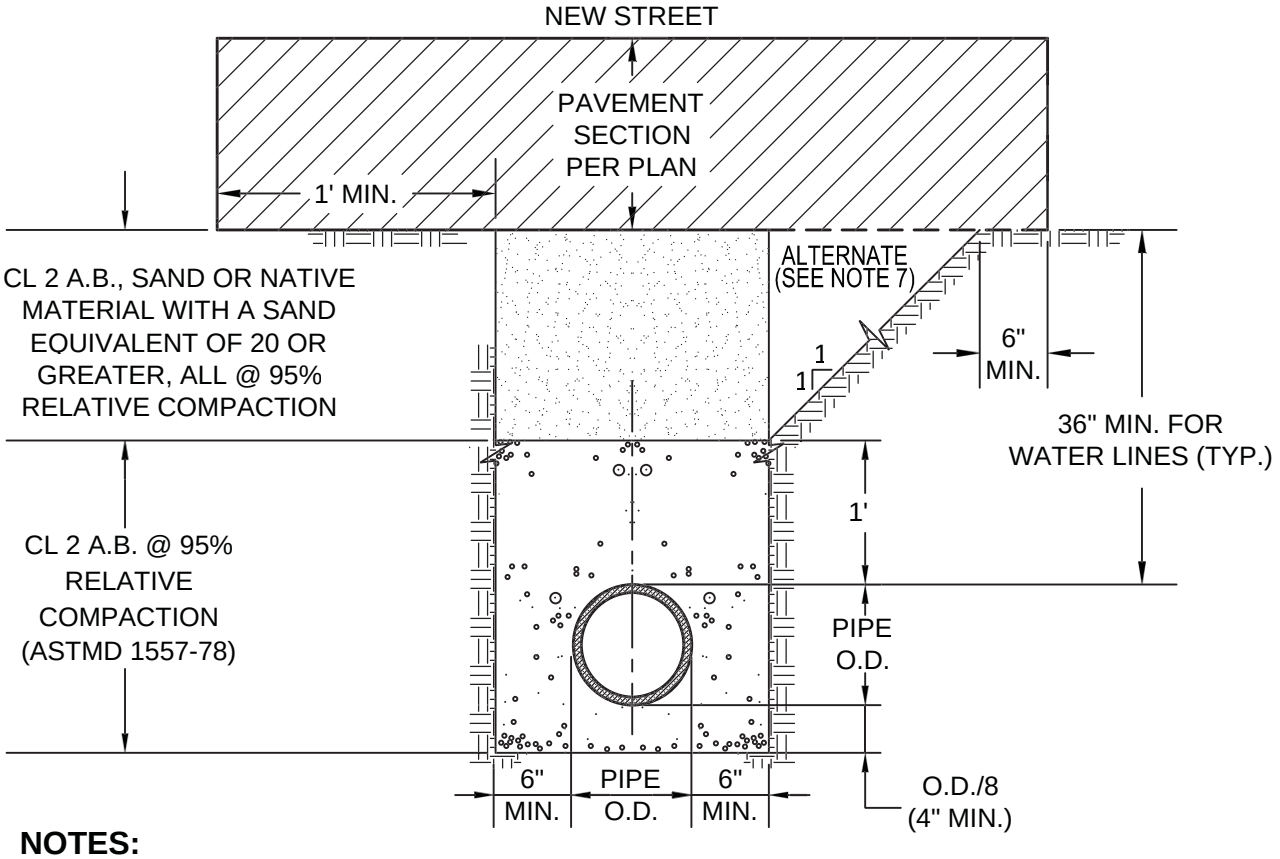

NOTES:

1. EASEMENT AREAS: SAME AS NEW STREETS BUT WITH 12" NATIVE SOIL CAP.
2. JETTING OF TRENCHES IS NOT ALLOWED.
3. ANY PROPOSED MODIFICATIONS MUST BE APPROVED IN WRITING BY THE CITY ENGINEER.
4. THE pH VALUE OF ALL BACKFILL MATERIAL SHALL BE TESTED TO BE WITHIN 6.5 TO 7.5 RANGE.
5. ANY NATIVE MATERIAL USED AS BACKFILL PER THIS STANDARD MUST BE PLACED AT OPTIMUM MOISTURE AND TESTED AND CERTIFIED AS SUCH BY AN APPROVED TESTING FIRM.
6. ALL COMPACTION SHALL BE DONE WITH REX COMPACTOR OR SHEEPS FOOT WHEEL.
7. ON NEW STREETS BEING A PART OF NEW SUBDIVISIONS: NATIVE MATERIAL MAY BE UTILIZED BETWEEN 1' ABOVE THE PIPE AND 1' BELOW SUBGRADE. IN THIS CASE, TRENCH SHALL BE LAID BACK AT 45° AND SHALL BE IN CONFORMANCE WITH ALL OTHER BACKFILL CRITERIA. MOISTURE CONTENT ON ROADWAYS AND SIDEWALKS SHALL BE WITHIN 2% OF OPTIMUM WITH THE CITY ENGINEER'S APPROVAL, AND 3% ABOVE OPTIMUM ON PARKWAYS, MEDIANS, AND LANDSCAPE AREAS.
8. NO RECYCLED A.B. IS ALLOWED.
9. SEE ST ST-25a FOR EXISTING STREET.

(Not To Scale)

REGISTERED PROFESSIONAL ENGINEER
BALWINDER S. GREWAL
C 49122
EXP. 9/30/14
STATE OF CALIFORNIA

PUBLIC WORKS DEPARTMENT

THE CITY OF BRENTWOOD

TRENCH AND BACKFILL REQUIREMENTS

BALWINDER S. GREWAL CITY ENGINEER

DATE:	JUNE 20, 2003	SHEET No.
REVISED:	DEC. 31, 2013	ST-25

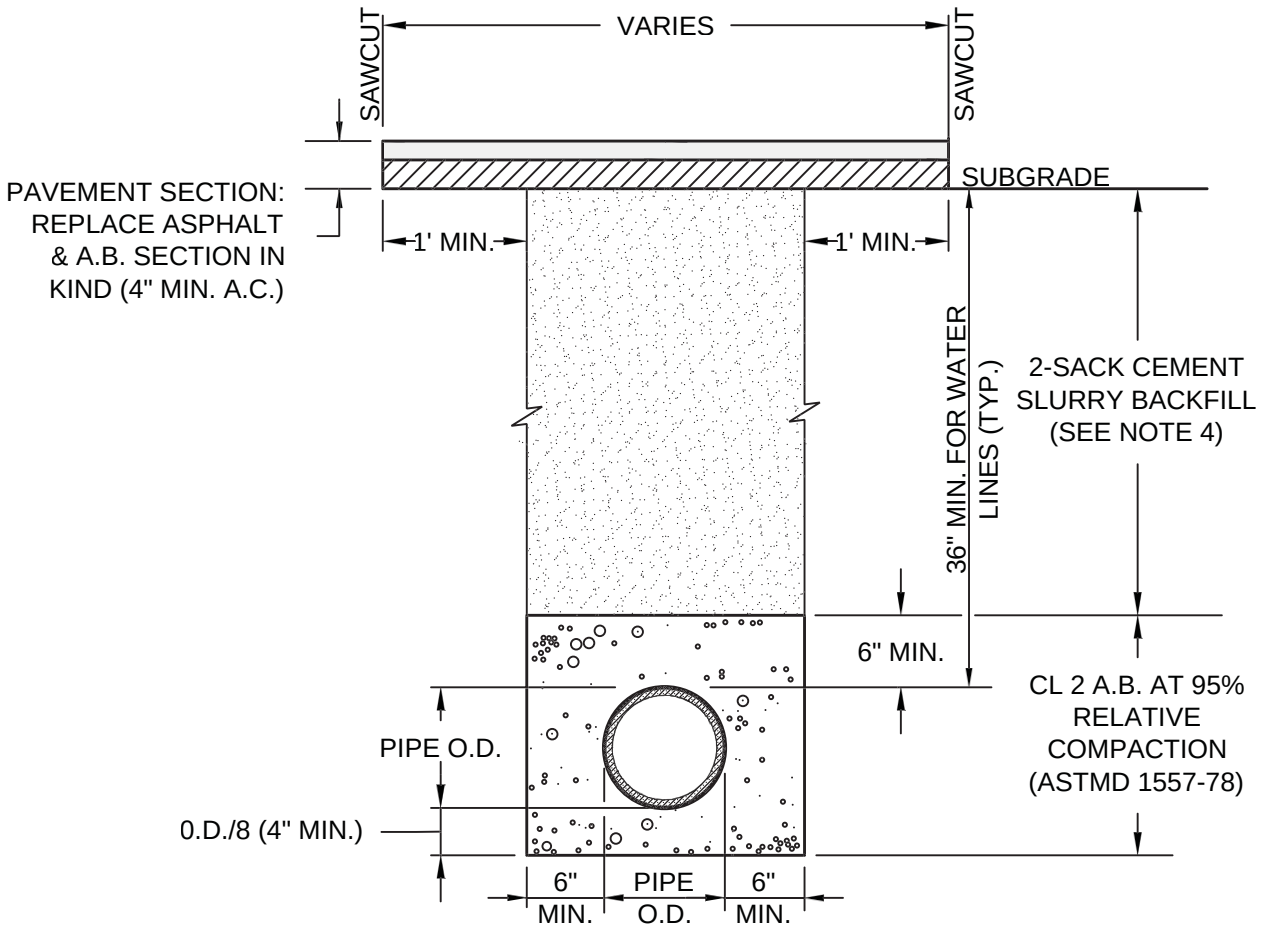

NOTES:

1. SEE ST-25b FOR ADDITIONAL NOTES ON OPEN TRENCH, BACKFILL AND REPAIR OF EXISTING STREETS.

2. UTILITY COMPANIES PARTICIPATING IN CONTRA COSTA UTILITY COALITION (i.e., PG&E, AT&T, COMCAST, CCWD, EBMUD, CCCSD), SHALL USE THE STANDARD TRENCH DETAIL EXHIBIT A OR B, DATED MARCH 2005 (SEE APPENDIX D OF THIS STANDARD PLANS AND SPECIFICATIONS).

3. THE USE OF RECYCLED A.B. SHALL NOT BE ALLOWED.

4. A 2-SACK CEMENT SLURRY SHALL BE REQUIRED ON ALL TRENCHES UNLESS APPROVED OTHERWISE BY THE CITY ENGINEER IN WRITING.

(Not To Scale)

REGISTERED PROFESSIONAL ENGINEER
BALWINDER S. GREWAL
C 49122
EXP. 9/30/14
STATE OF CALIFORNIA

PUBLIC WORKS DEPARTMENT

THE CITY OF BRENTWOOD

OPEN TRENCH, BACKFILL AND REPAIR OF EXISTING STREETS

BALWINDER S. GREWAL CITY ENGINEER

DATE: AUG. 3, 2006

REVISED: DEC. 31, 2013

SHEET No.
ST-25a

NOTES:

1. REFER TO ST-25a FOR THE DETAIL ON OPEN TRENCH, BACKFILL AND REPAIR OF EXISTING STREETS.

2. JETTING OF TRENCHES IS NOT ALLOWED.

3. THIS DETAIL ASSUMES DEPTHS LESS THAN 8 FEET. FOR DEPTHS MORE THAN 8 FEET, ANY PROPOSED MODIFICATIONS OR ANY DIFFERING FIELD CONDITIONS NOT SPECIFIED HEREIN SHALL REQUIRE THE CITY ENGINEER'S WRITTEN APPROVAL.

4. CLASS II A.B. SHALL BE PLACED AND COMPACTED IN 1-FOOT LIFTS MAXIMUM. ALL COMPACTION SHALL BE DONE WITH REX COMPACTOR OR SHEEPS FOOT WHEEL.

5. ALL TRAFFIC STRIPING REMOVED OR DAMAGED SHALL BE REPLACED AND RESTORED TO ITS ORIGINAL CONDITION AND CONFIGURATION PER CITY STANDARDS.

6. PERMANENT PAVEMENT SHALL BE RESTORED WITHIN FOURTEEN (14) CALENDAR DAYS. TEMPORARY PAVEMENT DURING CONSTRUCTION SHALL BE MAINTAINED TO PROVIDE SMOOTH RIDE.

7. WHERE THE EDGE OF THE TRENCH IS WITHIN THREE (3) FEET OF A GUTTER LIP OR THE EDGE OF PAVEMENT, THE AC PAVEMENT BETWEEN THE TRENCH CUT AND THE GUTTER LIP/EDGE OF PAVEMENT SHALL BE REMOVED AND REPLACED WITH MATCHING PAVEMENT SECTION.

8. PERMISSION TO EXCAVATE OR TRENCH CUT IN NEW OR RESURFACED STREETS WILL NOT BE GRANTED FOR THREE (3) YEARS UNLESS APPROVED IN WRITING BY THE CITY ENGINEER.

9. A TRENCHED STREET SHALL BE GIVEN THE FOLLOWING CONDITIONS AS DIRECTED BY THE CITY ENGINEER:

   A. FOR RESIDENTIAL ROADS AND STREETS, THE ENTIRE WIDTH OF THE ROAD FOR THE LENGTH OF TRENCH PLUS 3 FEET ON EITHER END OF TRENCH SHALL BE SLURRY SEALED.

   B. FOR WIDE/MULTI-LANE ROADS THE SLURRY SEAL APPLICATION SHALL BE FOR THE TRENCH LENGTH PLUS 3 FEET ON EITHER SIDE OF TRENCH FOR:
   a. THE AFFECTED TRAVEL LANE, OR
   b. IF MULTIPLE LANES ARE AFFECTED, THOSE LANES, OR
   c. IF THE CENTER OF THE STREET, BOTH DIRECTIONS TO THE NEAREST LANE LINE OR CURB TO CURB.

   C. FOR ROADS THAT HAVE RECEIVED AN OVERLAY OR HAVE BEEN RECONSTRUCTED WITHIN THE LAST 3 YEARS, THE TRENCH LENGTH PLUS 1 FOOT BEYOND THE TRENCH WILL BE REPAIRED AND THE PAVEMENT WILL BE GROUND DOWN TO ACCEPT 0.15 FOOT OF ½ -INCH TYPE 'A' ASPHALT CONCRETE FOR:
   a. THE AFFECTED LANE, OR
   b. IF MULTIPLE LANE ARE AFFECTED, THOSE LANES, OR
   c. IF THE CENTER OF THE STREET HAS BEEN AFFECTED, THEN BOTH DIRECTIONS TO THE NEAREST LANE OR CURB TO CURB.

   D. TRANSVERSE TRENCHES SHALL HAVE A SLURRY SEAL APPLICATION OF A MINIMUM OF THE GREATER OF THE TRENCH WIDTH PLUS 1 FOOT OR 8 FEET TO REDUCE THE "PATCHY" APPEARANCE.

(Not To Scale)

REGISTERED PROFESSIONAL ENGINEER
BALWINDER S. GREWAL
C 49122
EXP. 9/30/14
STATE OF CALIFORNIA

PUBLIC WORKS DEPARTMENT

THE CITY OF BRENTWOOD

NOTES FOR OPEN TRENCH, BACKFILL AND REPAIR OF EXISTING STREETS

BALWINDER S. GREWAL CITY ENGINEER

DATE: JAN. 7, 2004
REVISED: DEC. 31, 2013

SHEET No.
ST-25b

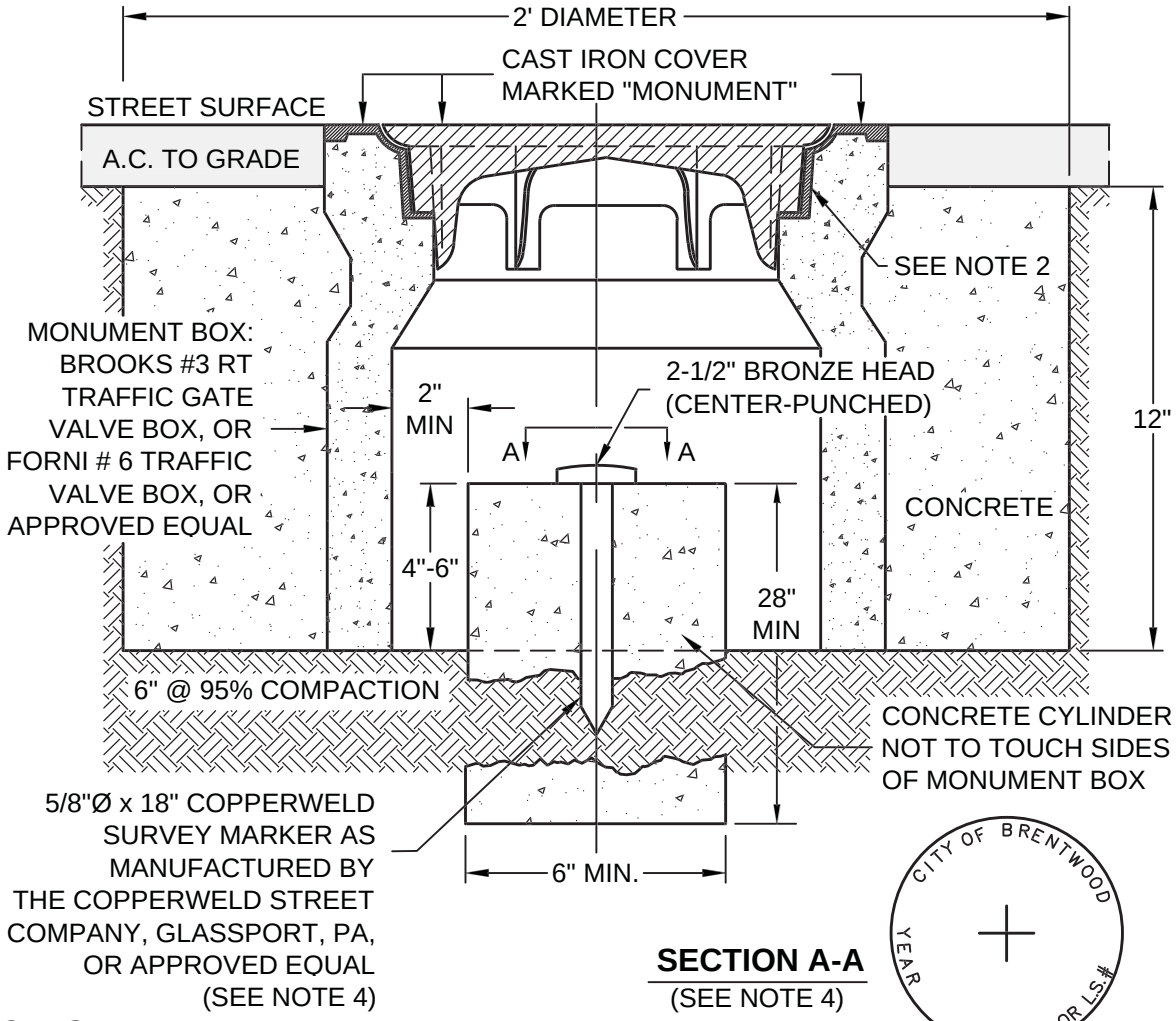

SECTION A-A
(SEE NOTE 4)

NOTES:

1. THE CONFIGURATION OF THE CAST IRON OR CAST STEEL FRAME AND COVER MAY VARY FROM THAT SHOWN.
2. FRAME SHALL BE EMBEDDED IN CONCRETE A MINIMUM OF 3".
3. ALL PORTLAND CEMENT CONCRETE SHALL BE CLASS "B" OR "MINOR" WITH 1" MAXIMUM AGGREGATE.
4. SURVEY MARKERS SHALL BE FURNISHED BY THE CONTRACTOR. INFORMATION TO APPEAR ON THE SURVEY MARKERS SHALL BE AS SHOWN ON SECTION A-A.
5. CALTRANS TYPE D MONUMENT ALT. NO. 1 OR ALT. NO. 2, WITH COVER MARKED "MONUMENT", MAY BE USED AT THE CONTRACTOR'S OPTION (NOTE 4 APPLIES).
6. STREET TIES SHALL BE SUBMITTED AFTER THE MONUMENT IS SET.
7. A LETTER MUST BE SENT TO THE CITY BY THE ENGINEER OF RECORD UPON SETTING THE MONUMENT.

(Not To Scale)

PUBLIC WORKS DEPARTMENT

THE CITY OF BRENTWOOD

BOXED SURVEY MONUMENT

BALWINDER S. GREWAL CITY ENGINEER

DATE:	OCT. 31, 2000	SHEET No.
REVISED:	DEC. 31, 2013	ST-26

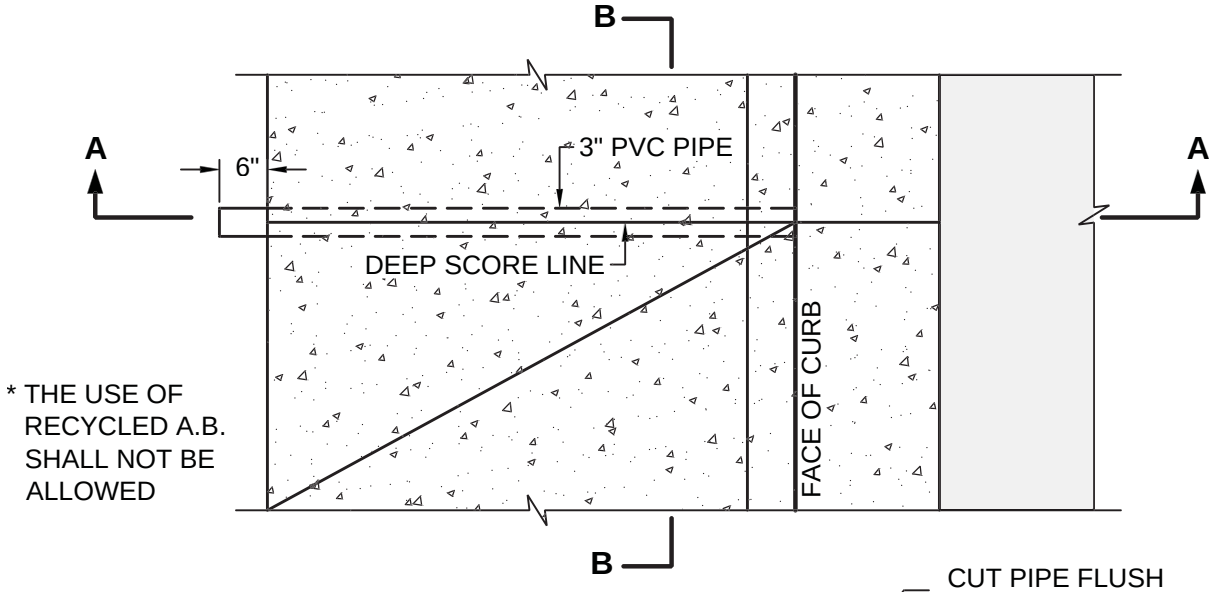

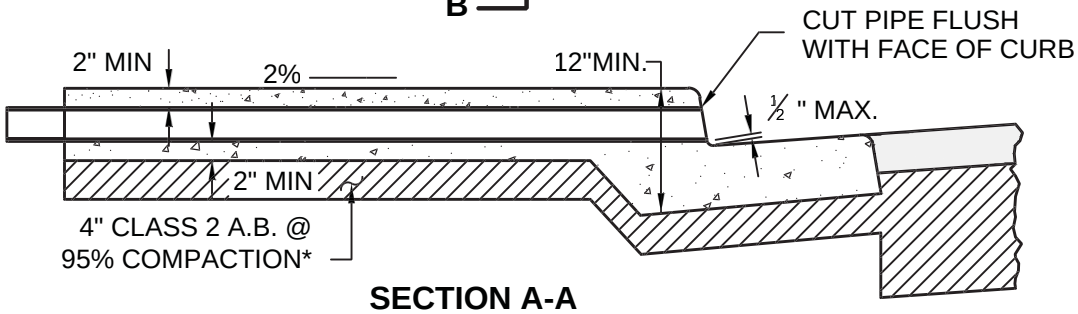

SECTION A-A

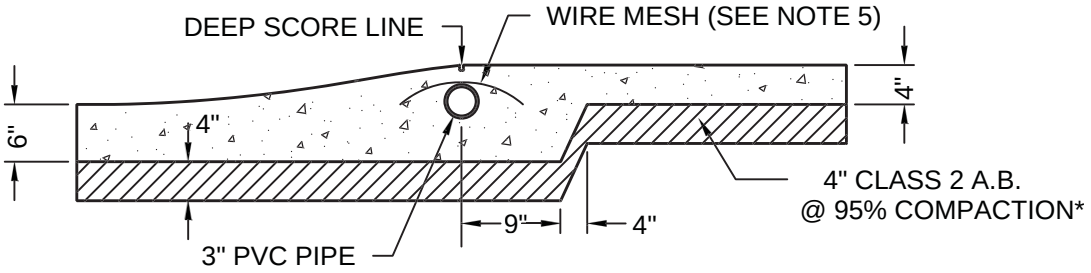

SECTION B-B

NOTES:

1. TO BE USED ONLY IN SPECIAL CASES AS APPROVED BY THE CITY ENGINEER.
2. CROSS SLOPE OF THE DRAIN SHALL BE 2%.
3. USE A STAINLESS STEEL BAND COUPLING FOR CONNECTION OF YARD DRAIN LINES.
4. SIDEWALK DRAIN SHALL BE CONSTRUCTED AT EACH SIDE OF DRIVEWAY, UNDER DEEP SCORE LINE.
5. WIRE MESH (6-6, 10"x10" WWM) SHALL BE INSTALLED OVER THE PVC PIPE BEFORE CONCRETE POUR.

(Not To Scale)

REGISTERED PROFESSIONAL ENGINEER
BALWINDER S. GREWAL
C 49122
EXP. 9/30/14
STATE OF CALIFORNIA

PUBLIC WORKS DEPARTMENT

THE CITY OF BRENTWOOD

THROUGH-THE-CURB DRAIN

BALWINDER S. GREWAL CITY ENGINEER

DATE:	JUNE 20, 2003	SHEET No.
REVISED:	DEC. 31, 2013	ST-27

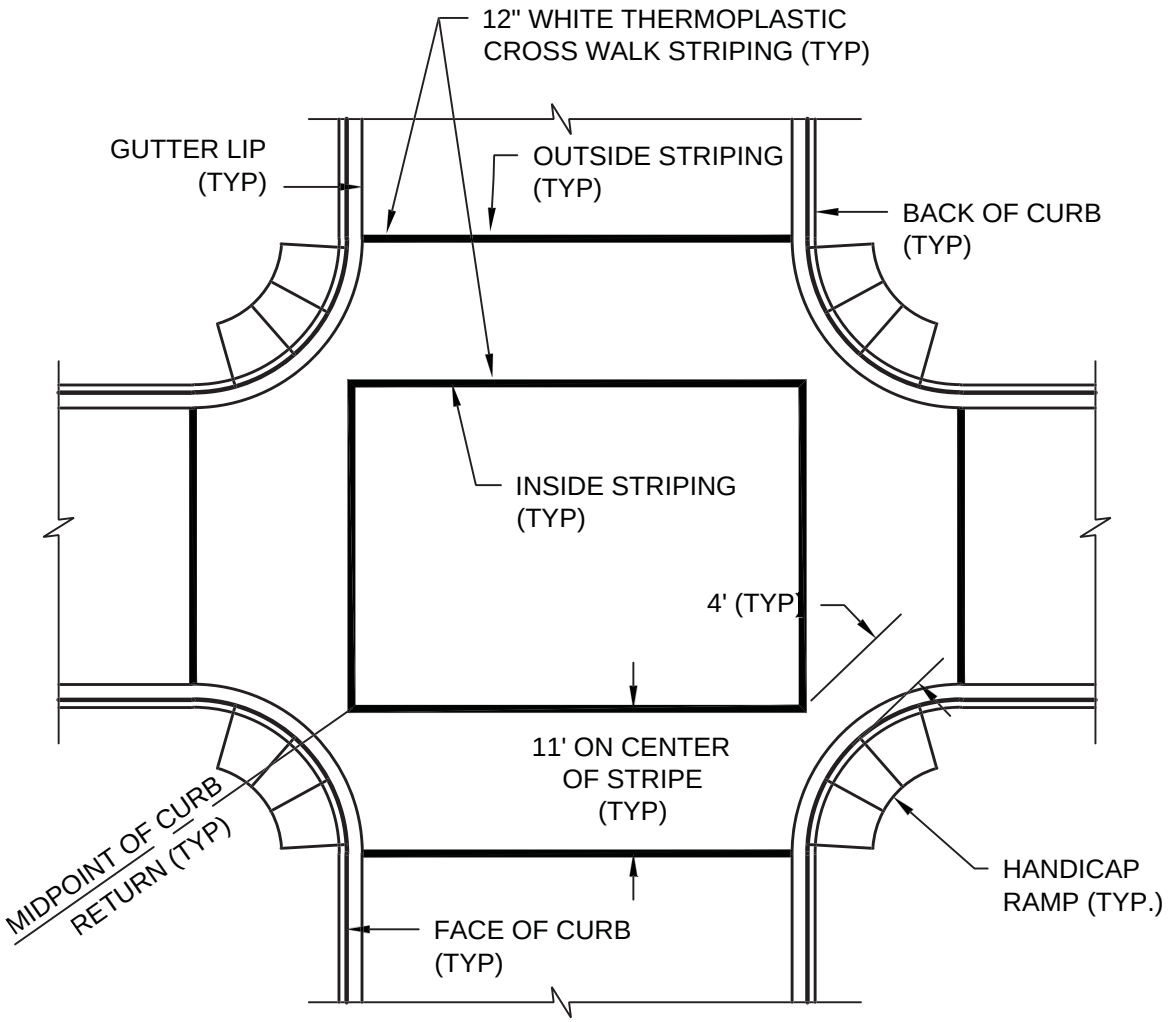

NOTES:

1. ON ALL CURB RETURNS, MARK OFF A POINT 4' FROM THE MIDPOINT OF THE CURB RETURN AT THE FACE OF CURB TOWARDS THE MIDPOINT OF THE DIAGONALLY OPPOSITE CURB RETURN.
2. CONNECT THOSE POINTS TO FORM INSIDE STRIPING.
3. MEASURE OUTSIDE STRIPING 11' ON CENTER OF THE INSIDE STRIPING.
4. AT SIGNALIZED INTERSECTIONS, PED PUSH BUTTONS SHALL BE INSTALLED PER ADA STANDARDS.
5. AREAS WHERE "STOP SIGN" IS NOT REQUIRED, ADD W11-2 WITH W16-7p AT THE X-WALK AND W11-2 WITH W16-9p FLUORESCENT YELLOW GRAIN MICROPRISMATIC BACKGROUND AND EC TRANSPARENT OVERLAY FILM BLACK 1178.
6. LOCATION/DISTANCE OF SIGNS WILL BE DETERMINED BY THE TRAFFIC ENGINEER OR USE MUTCD MINIMUM RECOMMENDED SIGN PLACEMENT CHART.

(Not To Scale)

REGISTERED PROFESSIONAL ENGINEER
BALWINDER S. GREWAL
C 49122
EXP. 9/30/14
STATE OF CALIFORNIA

PUBLIC WORKS DEPARTMENT

THE CITY OF BRENTWOOD

CROSS WALK STRIPING ON ARTERIAL STREETS

BALWINDER S. GREWAL CITY ENGINEER

DATE:	MAR. 13, 2001	SHEET No.
REVISED:	DEC. 31, 2013	ST-28

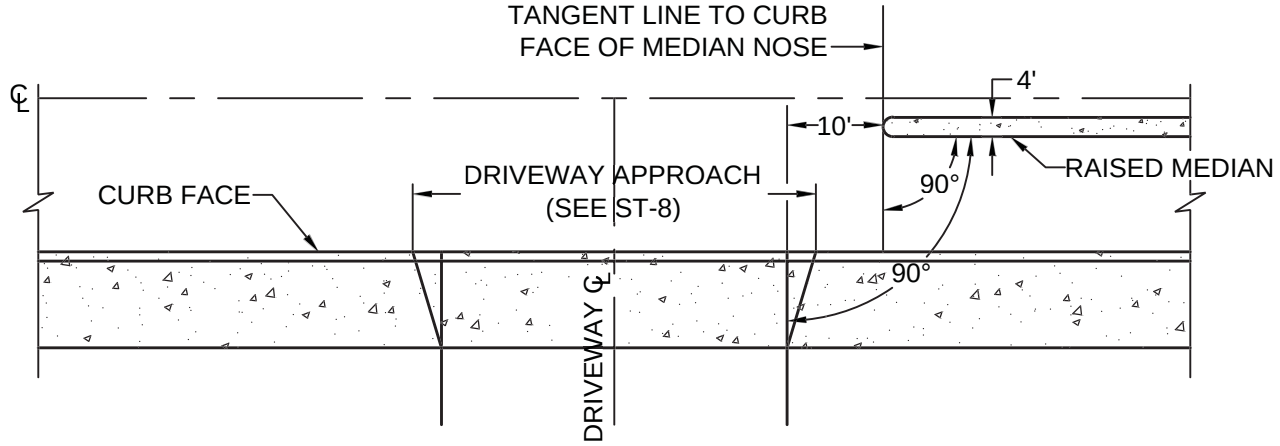

RIGHT ANGLE INTERSECTION (DRIVEWAY)

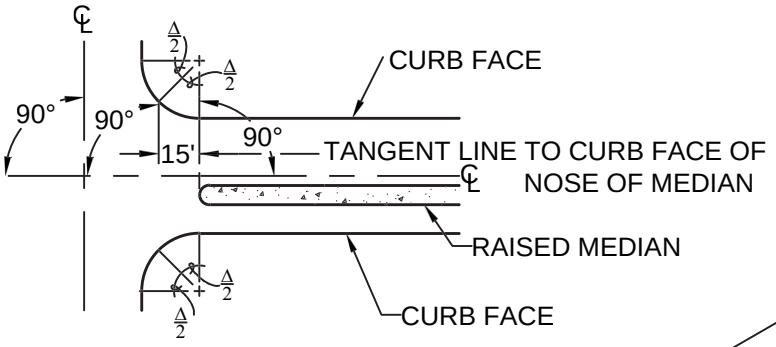

RIGHT ANGLE INTERSECTION (STREET)

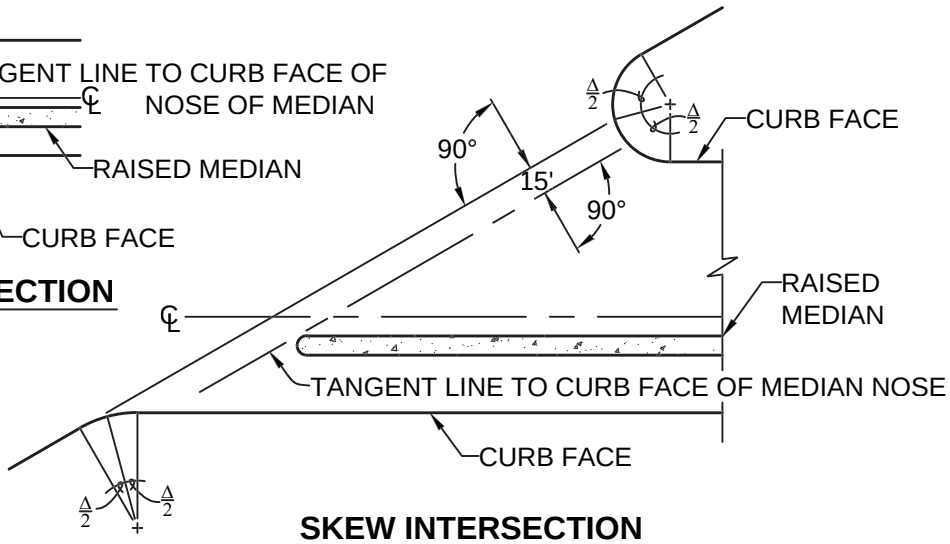

Δ -CURB RETURN INCLUDED ANGLE

SKEW INTERSECTION

NOTES:

1. EXTEND DOUBLE YELLOW STRIPING FROM MEDIAN NOSE TO CROSSWALK OR TO HALF THE Δ IF THERE IS NO CROSSWALK.
2. SEE CROSSWALK STRIPING DETAIL ST-28.

(Not To Scale)

REGISTERED PROFESSIONAL ENGINEER
BALWINDER S. GREWAL
C 49122
EXP. 9/30/14
STATE OF CALIFORNIA

PUBLIC WORKS DEPARTMENT

THE CITY OF BRENTWOOD

RAISED MEDIAN NOSE LOCATION

BALWINDER S. GREWAL CITY ENGINEER

DATE:	MAR. 19, 2001	SHEET No.
REVISED:	DEC. 31, 2013	ST-29

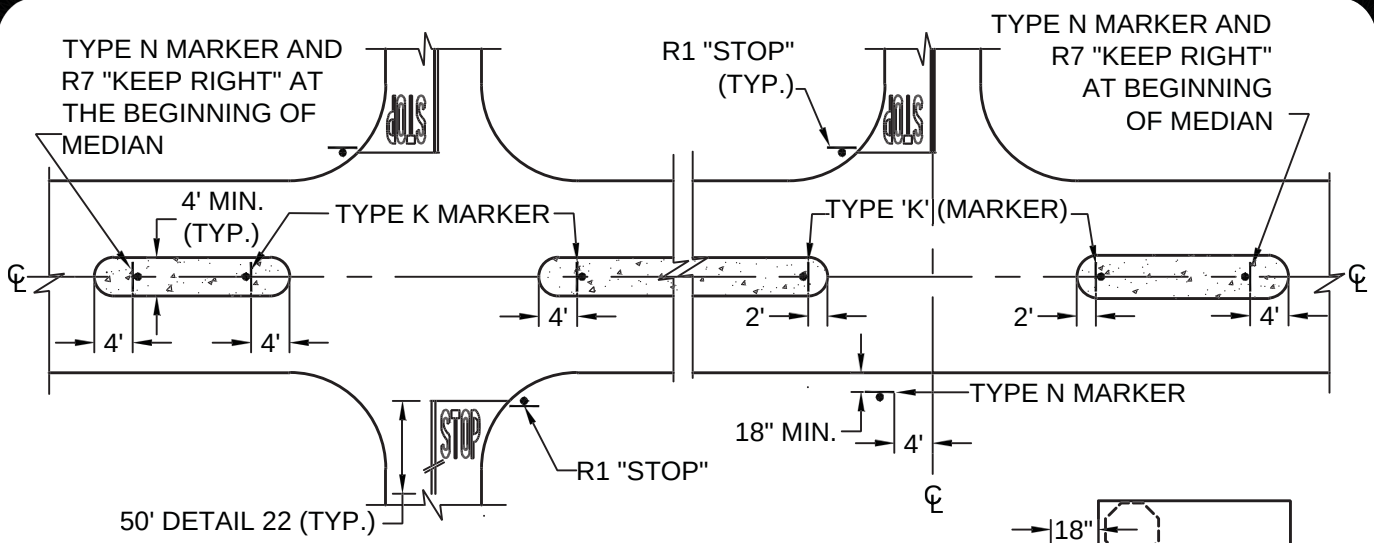

MEDIAN SIGNING AT INTERSECTIONS

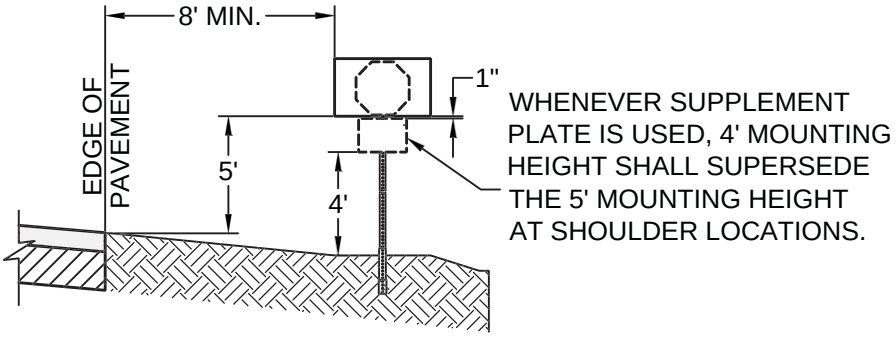

SHOULDER LOCATIONS

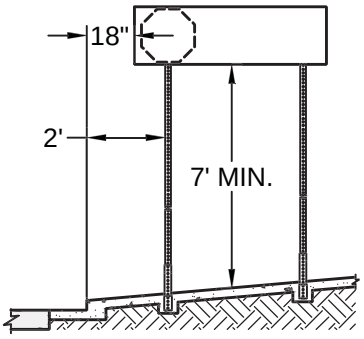

SHOULDER LOCATIONS

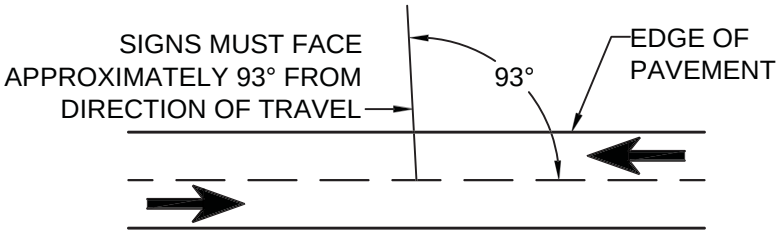

PLAN VIEW

NOTES:

1. SEE STANDARD PLAN ST-13 FOR ROADSIDE BREAKAWAY SIGN POST.
2. PARKWAY AND SHOULDER SIGNS HAVING A HORIZONTAL WIDTH 48" SHALL BE DUAL-POST MOUNTED. SIGNS LESS THAN 48" IN WIDTH SHALL BE MOUNTED ON A SINGLE POST.
3. ADVANCE STREET NAME SIGNS PLACED IN MEDIANS SHALL BE 2' FROM THE EDGE OF THE TRAVELED WAY, AND BE LOCATED APPROXIMATELY 300' FROM THE INTERSECTION OR 100' FROM THE BEGINNING OF A LEFT TURN POCKET. SIGN MOUNTING HEIGHT SHALL BE 7' ABOVE MEDIAN SURFACE OR AS DIRECTED BY THE CITY ENGINEER.

(Not To Scale)

PUBLIC WORKS DEPARTMENT

THE CITY OF BRENTWOOD

TRAFFIC SIGN PLACEMENT

BALWINDER S. GREWAL CITY ENGINEER

DATE:	MAR. 20, 2001	SHEET No.
REVISED:	DEC. 31, 2013	ST-30

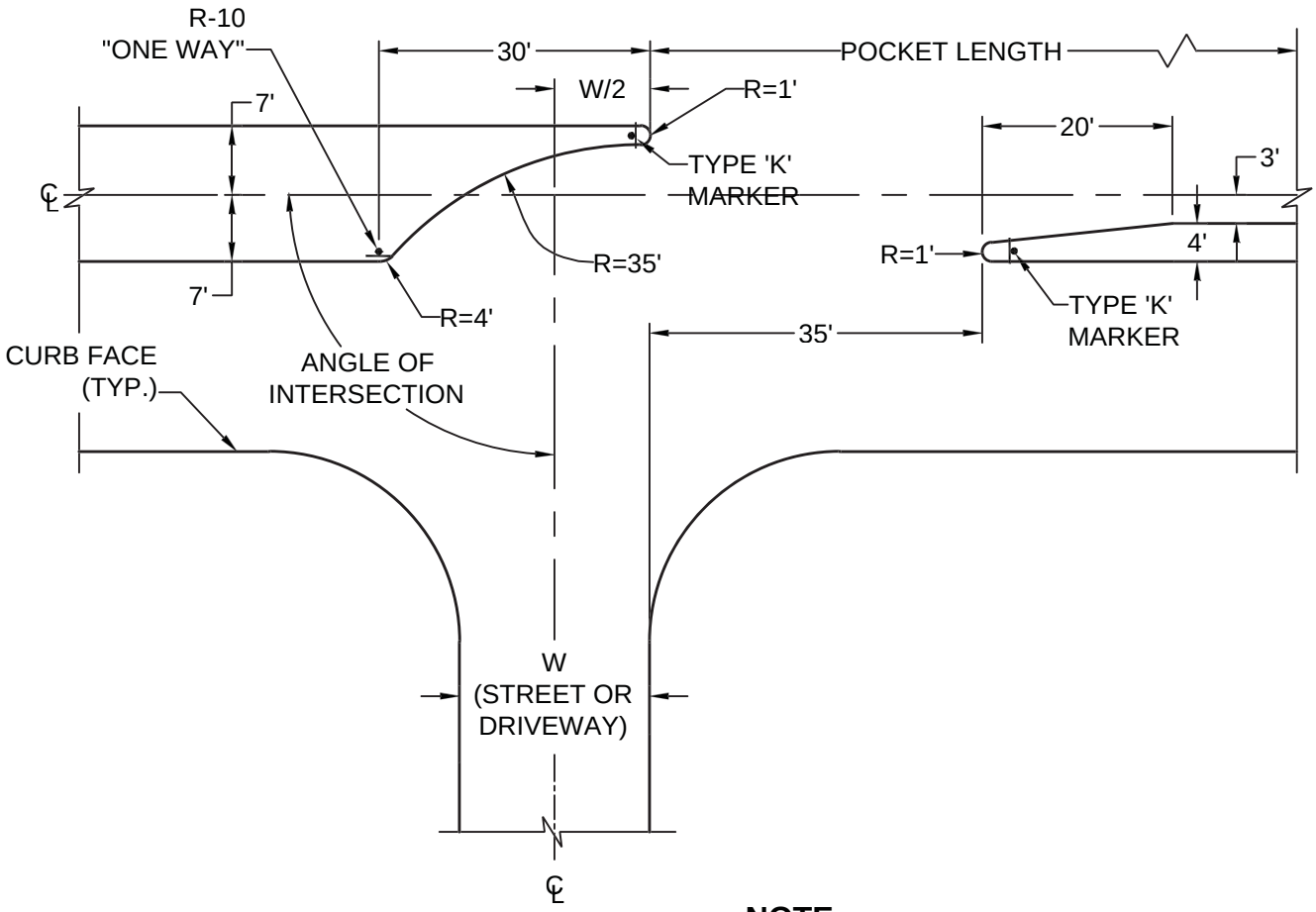

LEGEND:

• TRAFFIC SIGN

NOTE:

ON 90° INTERSECTIONS MEDIAN OPENING FOR MEDIAN WIDTHS OF 22' OR GREATER SHALL BE 60'; FOR LESS THAN 22' SHALL BE 70'.

(Not To Scale)

REGISTERED PROFESSIONAL ENGINEER
BALWINDER S. GREWAL
C 49122
EXP. 9/30/14
STATE OF CALIFORNIA

PUBLIC WORKS DEPARTMENT

THE CITY OF BRENTWOOD

LEFT-TURN-ONLY MEDIAN OPENING

BALWINDER S. GREWAL CITY ENGINEER

DATE: MAR. 12, 2001

REVISED: DEC. 31, 2013

SHEET No.

ST-31

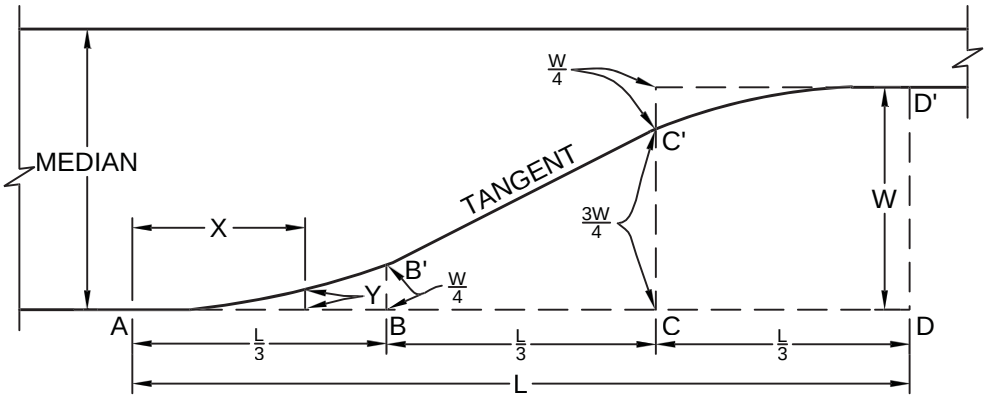

PLAN VIEW

$$Y = 2.25\,W\left(\frac{X}{L}\right)^2$$

L= LENGTH OF TAPER
W= MAXIMUM OFFSET DISTANCE
X= DISTANCE ALONG BASELINE
Y= OFFSET FROM BASELINE

L	DISTANCE X											
60'	5'	10'	15'	20'	25'	30'	35'	40'	45'	50'	55'	60'
90'	7.5'	15'	22.5'	30'	37.5'	45'	52.5'	60'	67.5'	75'	82.5'	90'

W	OFFSET Y											
10'	0.16'	0.62'	1.41'	2.50'	3.75'	5.00'	6.25'	7.50'	8.59'	9.38'	9.84'	10.00'
12'	0.19'	0.75'	1.69'	3.00'	4.50'	6.00'	7.50'	9.00'	10.31'	11.25'	11.81'	12.00'
22'	0.34'	1.38'	3.09'	5.50'	8.25'	11.00'	13.75'	16.50'	18.91'	20.62'	21.66'	22.00'

NOTES:

1. TO DETERMINE OFFSET DISTANCE FOR ANY LENGTH OF TAPER USE FORMULA $Y = 2.25W(\frac{X}{L})^2$ FOR THE PORTIONS AB' AND C' D' WHICH ARE PARABOLIC CURVES.

2. THE PORTION B' C' IS A TANGENT. WHEN THE BASELINE IS CURVED, THE OFFSETS ARE APPLIED TO THE CURVE BASELINE, AND B' C' IS NO LONGER A TANGENT.

(Not To Scale)

REGISTERED PROFESSIONAL ENGINEER
BALWINDER S. GREWAL
C 49122
EXP. 9/30/14
STATE OF CALIFORNIA

PUBLIC WORKS DEPARTMENT

THE CITY OF BRENTWOOD

MEDIAN TAPER

BALWINDER S. GREWAL CITY ENGINEER

DATE: MAR. 20, 2001
REVISED: DEC. 31, 2013

SHEET No.
ST-32

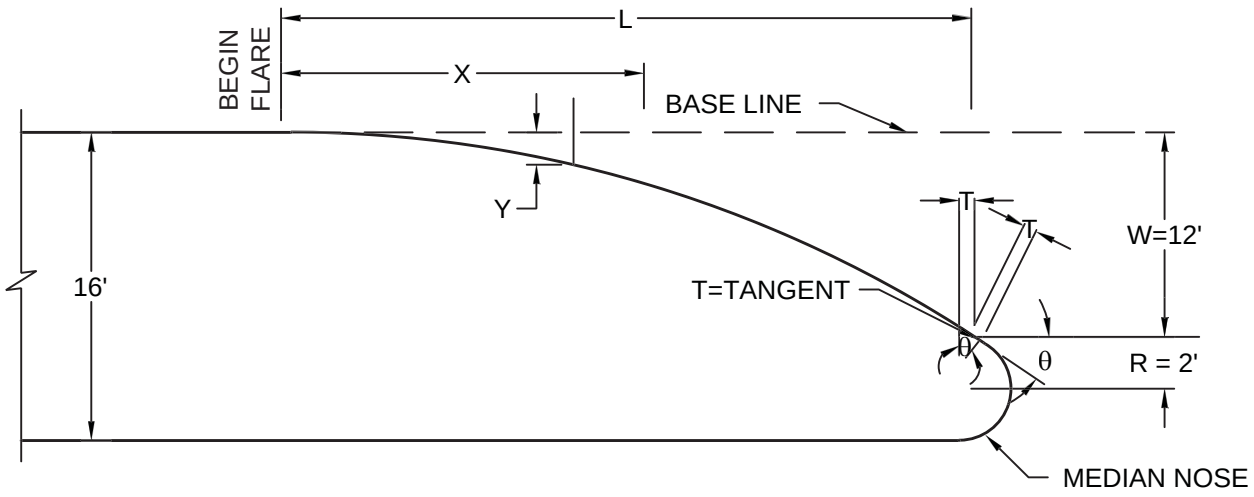

$$Y = W\left(\frac{X}{90'}\right)^2 \qquad \text{TAN}\left(\frac{2W}{90'}\right) = \theta \qquad T = R\ \text{TAN}\left(\frac{\theta}{2}\right)$$

L = LENGTH OF FLARE IN FEET
W = MAXIMUM OFFSET DISTANCE IN FEET
X = DISTANCE ALONG BASE LINE IN FEET
Y = OFFSET FROM BASE LINE IN FEET

OFFSET Y FOR W/L = 1.15'

L / X	10'	15'	20'	25'	30'	40'	45'	50'	60'	70'	75'	80'	90'	100'
90'	0.07'	0.17'	0.30'	0.46'	0.67'	1.19'	1.50'	1.85'	2.67'	3.63'	4.17'	4.74'	6.00'	12.00'
120'	.06'	0.12	.22'	0.34	.50'	.89'	1.18	1.39'	2.00'	2.72'	3.11	3.56'	4.50'	5.56'

NOTE:

IF STATION OF RADIUS POINT IS NOT GIVEN ON PLAN, TANGENT 'T' MAY BE IGNORED.

(Not To Scale)

REGISTERED PROFESSIONAL ENGINEER
BALWINDER S. GREWAL
C 49122
EXP. 9/30/14
STATE OF CALIFORNIA

PUBLIC WORKS DEPARTMENT

THE CITY OF BRENTWOOD

MEDIAN FLARE

BALWINDER S. GREWAL CITY ENGINEER

DATE: MAR. 20, 2001
REVISED: DEC. 31, 2013

SHEET No.
ST-33

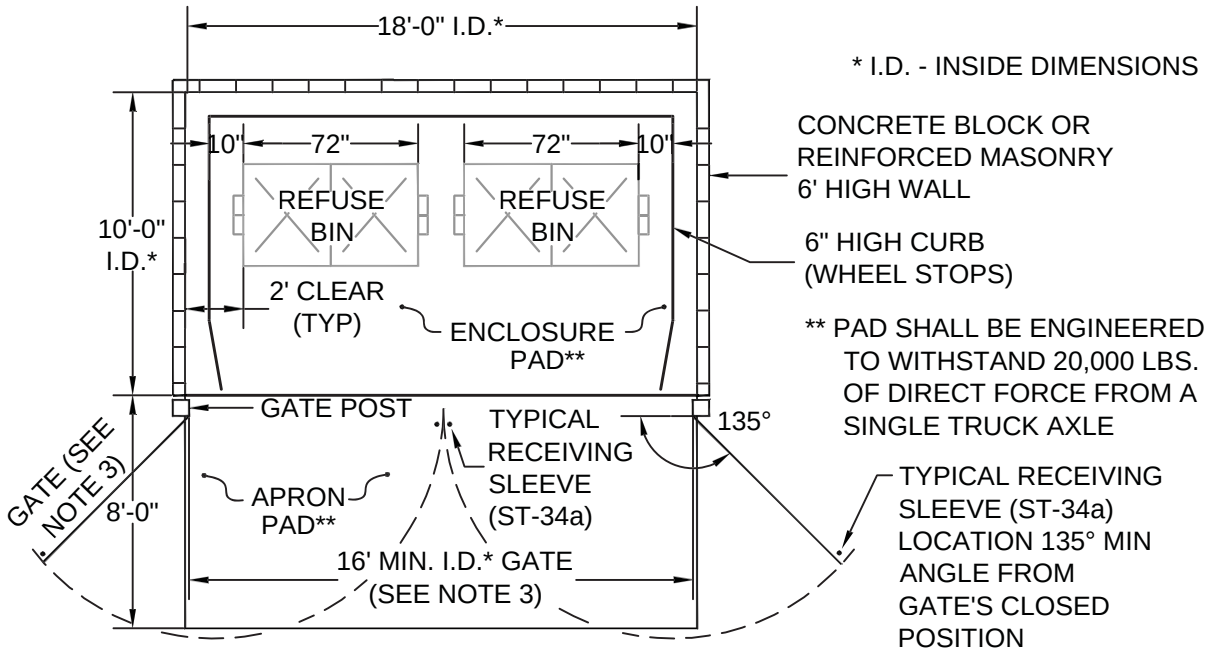

NOTES:

1. THIS STANDARD PROVIDES SOME, BUT NOT ALL REQUIRED SPECIFICATIONS. SEE THE **"SOLID WASTE PLAN GUIDE AND ENCLOSURE STANDARDS"** IN THE ENGINEERING PROCEDURES MANUAL FOR ADDITIONAL DETAILS.

2. A MINIMUM OF 32' VERTICAL AND 50' HORIZONTAL CLEARANCE OVER THE ENTIRE APPROACH TO AND FROM THE ENCLOSURE SHALL BE PROVIDED. NO ROOFS ALLOWED.

3. GATES SHALL BE SOLID METAL WITH CANE BOLTS/SLEEVES (SEE ST-34a) IN THE OPEN AND CLOSED POSITION. EACH GATE, WITH A MINIMUM TOTAL SPAN WIDTH OF 16' SHALL SWING OPEN A MIN OF 135° FROM CLOSED POSITION. HUNG GATES SHALL HAVE A 4" CLEARANCE OFF THE FINISHED PAD OR APRON AND SURROUNDING CURB.

4. THE TRASH ENCLOSURE PAD SHALL BE DESIGNED TO DRAIN TO A PERVIOUS SURFACE THROUGH INDIRECT SOIL INFILTRATION IN ACCORDANCE WITH THE CONTRA COSTA CLEAN WATER PROGRAM STORMWATER C.3 GUIDEBOOK (REFERENCE WEBSITE: http://cccleanwater.org/construction/nd.php#Guidebook). CONTACT THE CITY ENGINEER FOR ANY SPECIFIC STORMWATER CONCERNS.

5. THE EXTERIOR OF ENCLOSURE SHALL COMPLY WITH STANDARD CONDITIONS OF APPROVAL FOR COMMERCIAL AND INDUSTRIAL PROJECTS. NO ENCLOSURE SHALL BE INSTALLED BEHIND PARKING SPACES.

6. ONLY SOLID WASTE CONTAINERS ARE ALLOWED INSIDE THE ENCLOSURE. GREASE STORAGE BINS, SOILED RAG STORAGE, ETC. SHALL NEVER BE STORED IN THE ENCLOSURE.

(Not To Scale)

REGISTERED PROFESSIONAL ENGINEER
BALWINDER S. GREWAL
C 49122
EXP. 9/30/14
STATE OF CALIFORNIA

PUBLIC WORKS DEPARTMENT

THE CITY OF BRENTWOOD

SOLID WASTE ENCLOSURE

BALWINDER S. GREWAL CITY ENGINEER

DATE:	JAN. 18, 2007	SHEET No.
REVISED:	DEC. 31, 2013	ST-34

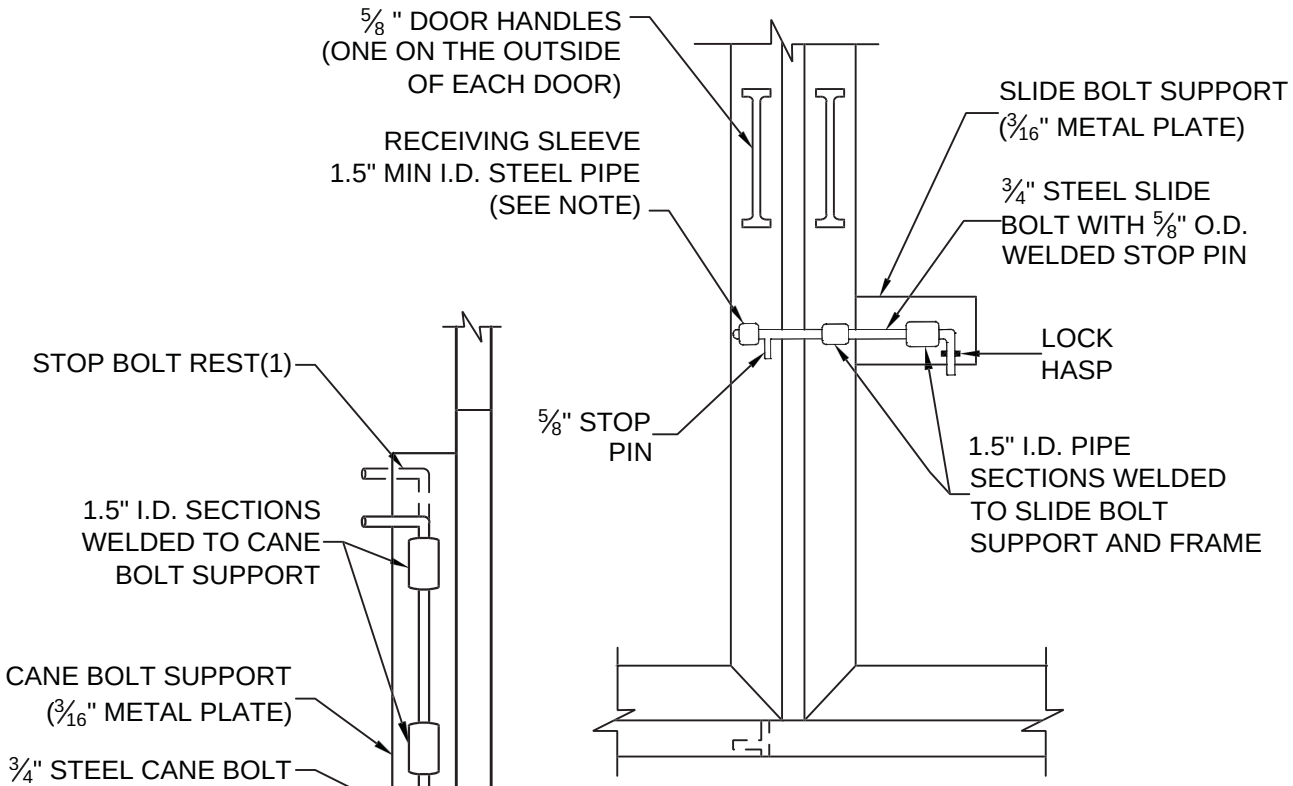

SLIDE BOLT DETAIL

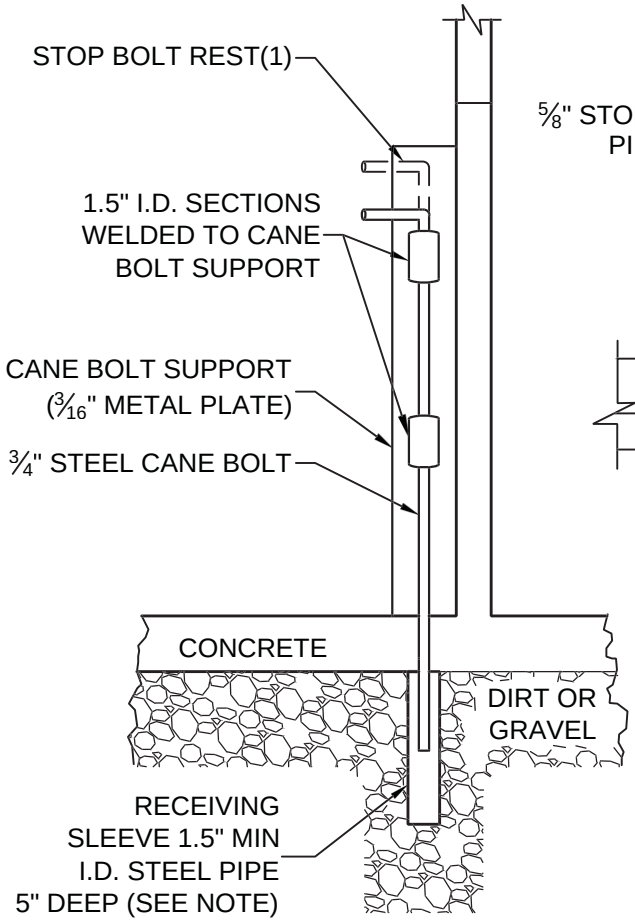

CANE BOLT DETAIL

NOTE:

1. BOLTS SHALL BE MIN 3/4". SLEEVES ON PIPES SHALL BE MIN 1.5" OR TWICE THE BOLT DIAMETER.
2. OUTSIDE OPERATING RANGE FOR CANE BOLTS MUST BE BETWEEN 24" TO 32" FROM THE GROUND.
3. CANE BOLT MUST BE MOUNTED ON THE OUTSIDE OF DOOR.

(Not To Scale)

REGISTERED PROFESSIONAL ENGINEER
BALWINDER S. GREWAL
C 49122
EXP. 9/30/14
STATE OF CALIFORNIA

PUBLIC WORKS DEPARTMENT

THE CITY OF BRENTWOOD

SOLID WASTE ENCLOSURE BOLT DETAILS

BALWINDER S. GREWAL CITY ENGINEER

DATE: JAN. 18, 2007

REVISED: DEC. 31, 2013

SHEET No. **ST-34a**

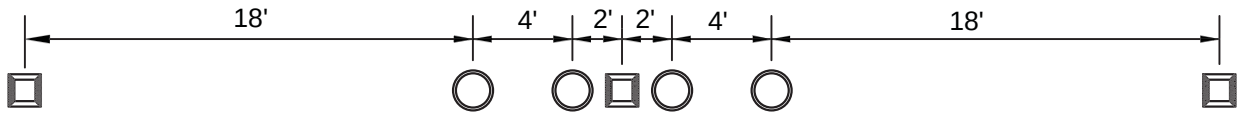

45 MPH AND OVER

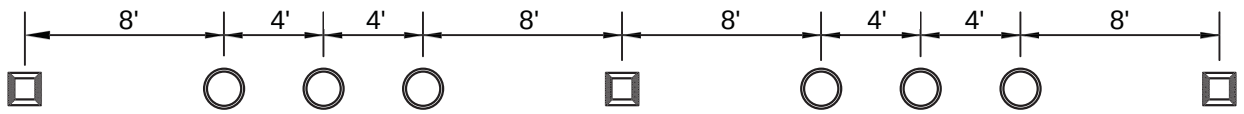

UNDER 45 MPH

LEGEND:

TYPE 'C' WHITE-RED REFLECTIVE MARKER

TYPE 'A' NON-REFLECTIVE MARKER

(Not To Scale)

REGISTERED PROFESSIONAL ENGINEER
BALWINDER S. GREWAL
C 49122
EXP. 9/30/14
STATE OF CALIFORNIA

PUBLIC WORKS DEPARTMENT

THE CITY OF BRENTWOOD

LANELINE STRIPING

BALWINDER S. GREWAL CITY ENGINEER

DATE:	APR. 29, 2005	SHEET No.
REVISED:	DEC. 31, 2013	ST-35

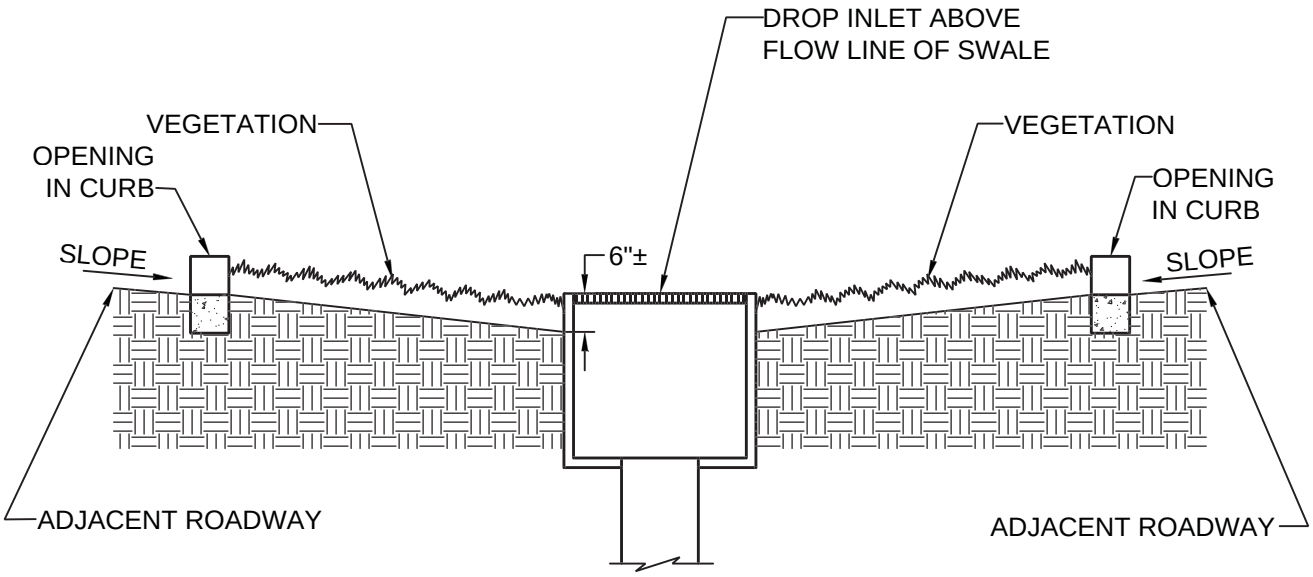

NOTES:

1. ADJACENT ROADWAY DESIGN SHALL PROVIDE CROSS-SLOPE INTO MEDIANS.
2. RUNOFF FROM STREET CAN BE DIRECTED INTO SWALE BY SHEET FLOW OR CURB INLETS.
3. CONCAVE MEDIANS SHALL BE SIZED TO ACCOMMODATE THE WATER QUALITY VOLUME, AND PLANTING SHALL BE DESIGNED TO WITHSTAND PERIODIC INUNDATION.
4. SET CATCH BASIN RIM ELEVATIONS JUST BELOW THE PAVEMENT ELEVATION, BUT ABOVE THE FLOW LINE OF THE INFILTRATION AREA SO THAT THE WATER QUALITY VOLUME WILL COLLECT IN THE SWALE BEFORE OVERFLOWING INTO THE UNDERGROUND SYSTEM.

(Not To Scale)

REGISTERED PROFESSIONAL ENGINEER
BALWINDER S. GREWAL
C 49122
EXP. 9/30/14
STATE OF CALIFORNIA

PUBLIC WORKS DEPARTMENT

THE CITY OF BRENTWOOD

CONCAVE MEDIAN

BALWINDER S. GREWAL CITY ENGINEER

DATE:	MAR 19, 2001	SHEET No.
REVISED:	DEC. 31, 2013	ST-36

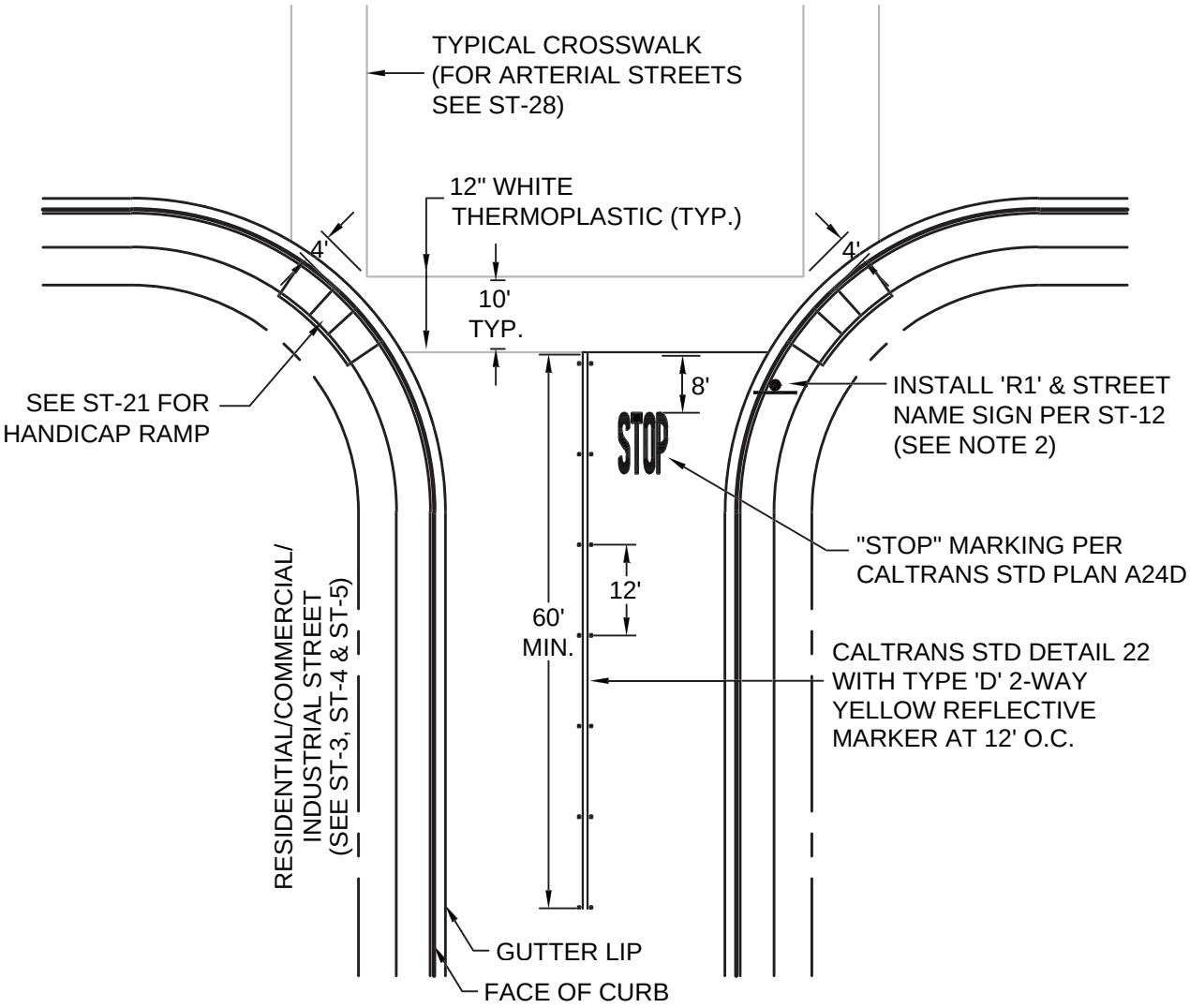

NOTES:

1. ALL PAVEMENT MARKINGS SHALL BE THERMOPLASTIC.
2. 'R1' SHALL BE INSTALLED IN THE LANDSCAPE STRIP ON SEPARATED SIDEWALK OR 18" BEHIND BACK OF WALK ON MONOLITHIC SIDEWALK.
3. NO PERMANENT MARKINGS SHALL BE PLACED UNTIL THE CITY ENGINEER OR HIS REPRESENTATIVE APPROVES THE CAT-TRACKING IN THE FIELD.
4. CROSSWALKS NEAR SCHOOLS SHALL BE YELLOW.

(Not To Scale)

REGISTERED PROFESSIONAL ENGINEER
BALWINDER S. GREWAL
C 49122
EXP. 9/30/14
STATE OF CALIFORNIA

PUBLIC WORKS DEPARTMENT

THE CITY OF BRENTWOOD

TYPICAL 'STOP' INTERSECTION

BALWINDER S. GREWAL CITY ENGINEER

DATE: JAN. 20, 2005

REVISED: DEC. 31, 2013

SHEET No.
ST-37

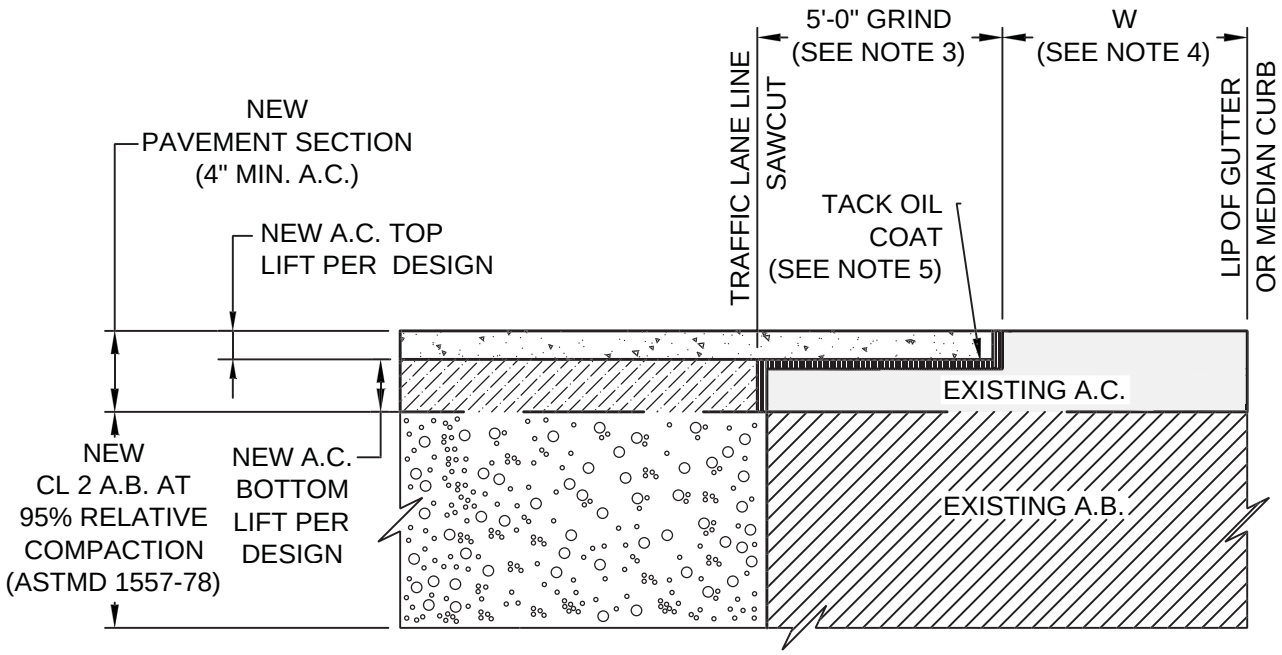

ELEVATION

NOTES:

1. PAVE WITHIN 24 HOURS OF CONFORM GRINDING TO MAINTAIN A CLEAN EDGE.
2. EACH ASPHALT LIFT SHALL END AT THE EDGE OF A TRAFFIC LANE LINE WITH A MAXIMUM 6" OFFSET FROM THE EDGE OF THE LANE LINE AND A MAXIMUM OFFSET OF 12" FROM THE PREVIOUS EDGE OF THE ASPHALT LIFT.
3. PAVEMENT JOINT GRIND OF AN EXISTING LANE SHALL BE 5 FEET IN WIDTH FOR EACH SECTION, UNLESS WITHIN 3 FEET OF THE LIP OF GUTTER.
4. IF THE REMAINING PAVEMENT WIDTH (W) IS LESS THAN 3 FEET FROM THE GRIND TO THE LIP OF GUTTER MEDIAN CURB, EXTEND GRIND WIDTH TO THE LIP OF THE GUTTER.
5. A THIN LAYER OF TACK OIL COAT SHALL BE APPLIED BETWEEN EXISTING A.C. AND NEW PAVEMENT SECTION.
6. FOR TRENCH AND BACKFILL REQUIREMENTS, REFER TO ST-25, ST-25a, ST-25b.
7. NEW PAVEMENT SHALL BE SLURRY SEAL COATED BEFORE STRIPING.

(Not To Scale)

PUBLIC WORKS DEPARTMENT

THE CITY OF BRENTWOOD

NEW AND EXISTING PAVEMENT JOINT

BALWINDER S. GREWAL CITY ENGINEER

DATE:	APR. 29, 2005	SHEET No.
REVISED:	DEC. 31, 2013	ST-38

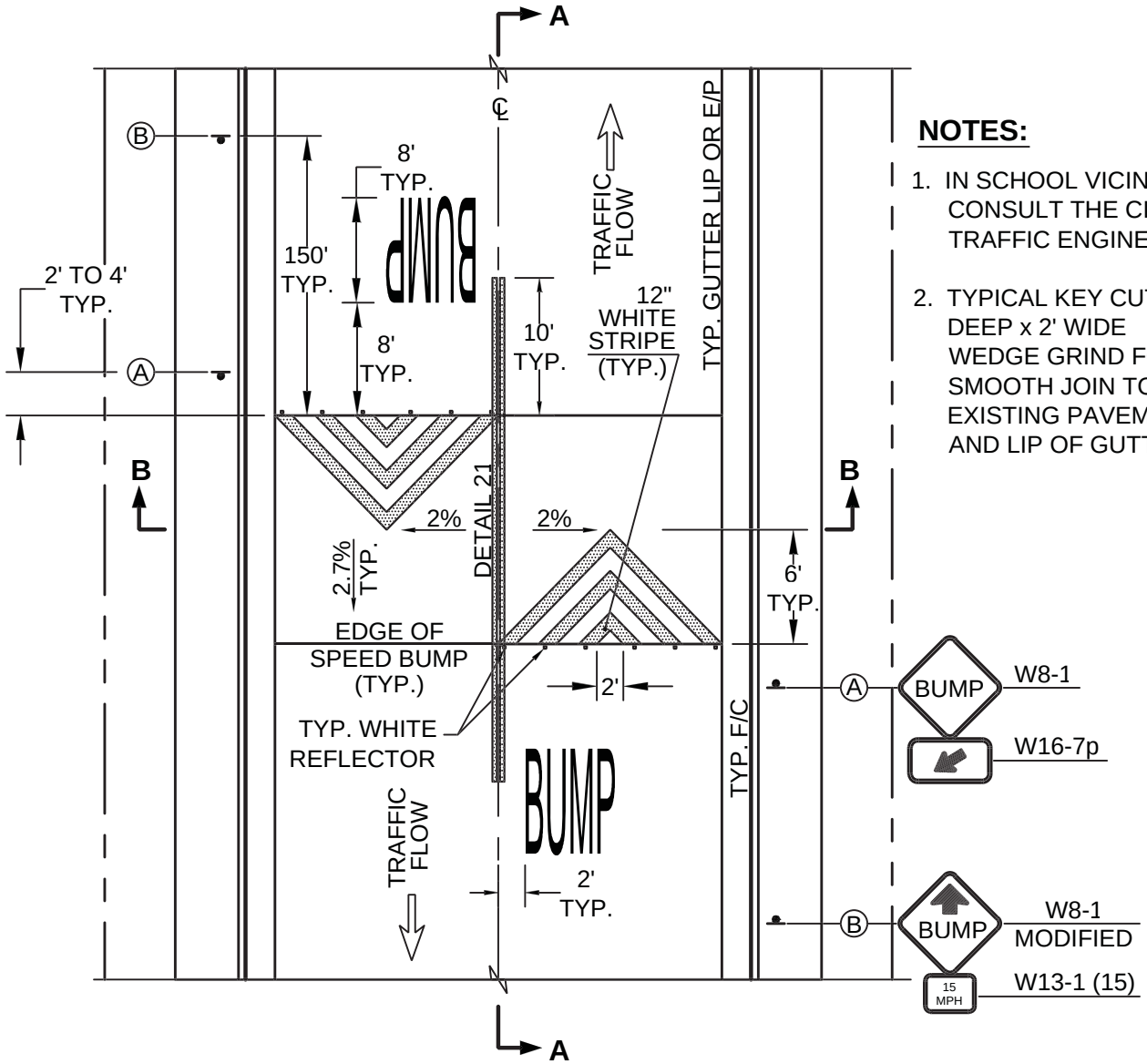

NOTES:

1. IN SCHOOL VICINITY, CONSULT THE CITY TRAFFIC ENGINEER.
2. TYPICAL KEY CUT 1" DEEP x 2' WIDE WEDGE GRIND FOR SMOOTH JOIN TO EXISTING PAVEMENT AND LIP OF GUTTER.

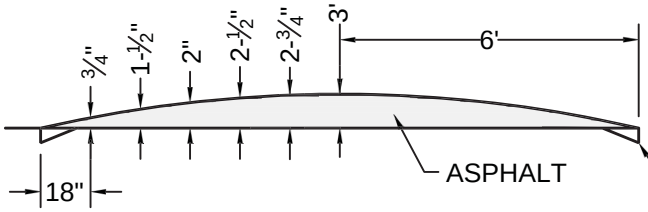

SECTION A-A

KEY CUT (TYP.)
SEE NOTE 2

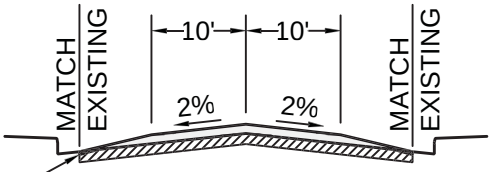

SECTION B-B

(Not To Scale)

REGISTERED PROFESSIONAL ENGINEER
BALWINDER S. GREWAL
C 49122
EXP. 9/30/14
STATE OF CALIFORNIA

PUBLIC WORKS DEPARTMENT

THE CITY OF BRENTWOOD

SPEED BUMP

BALWINDER S. GREWAL CITY ENGINEER

DATE: APR. 29, 2005
REVISED: DEC. 31, 2013

SHEET No.
ST-39

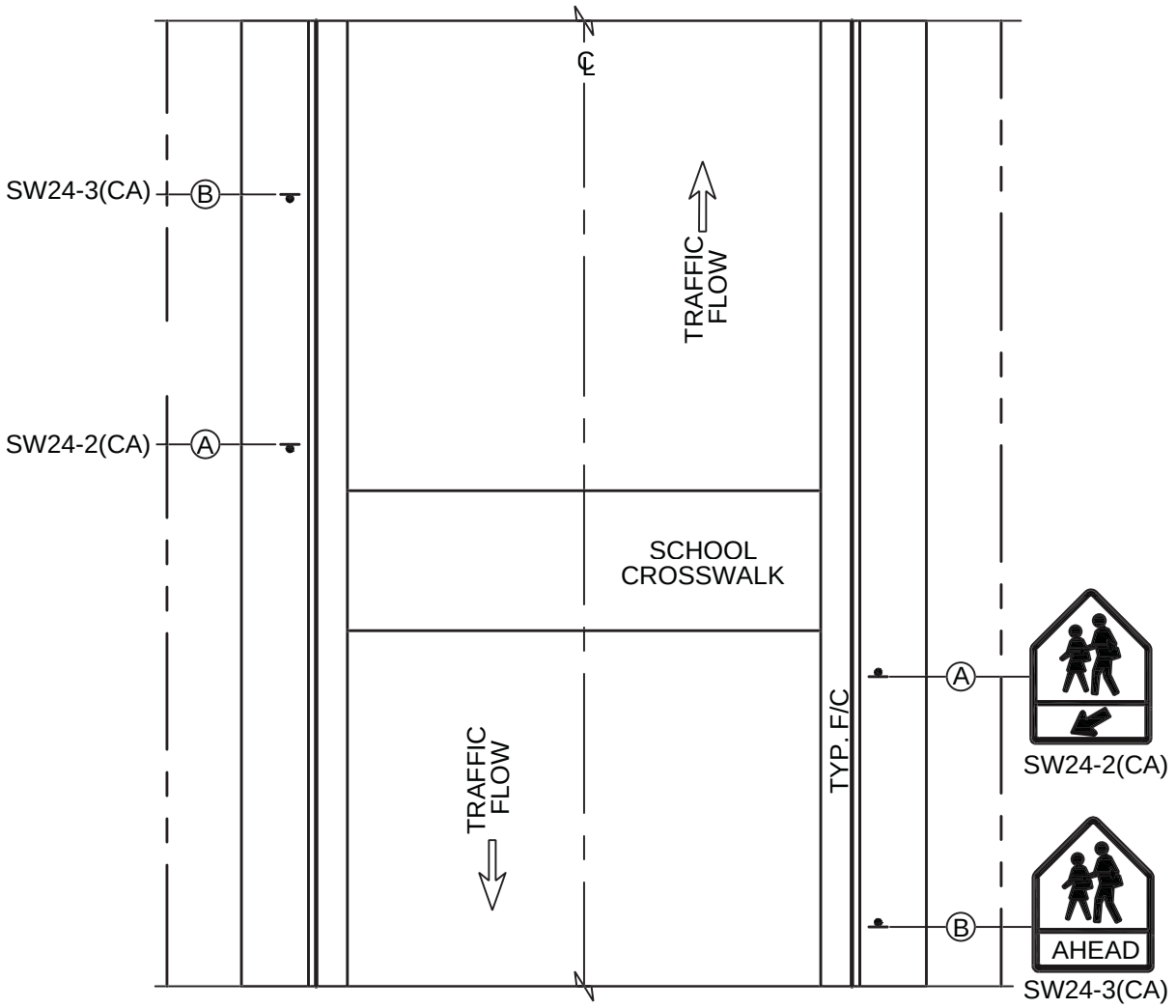

NOTE:

1. SIGNS ARE FLUORESCENT YELLOW GRAIN MICROPRISMATIC BACKGROUND AND EC TRANSPARENT OVERLAY FILM BLACK 1178.

(Not To Scale)

REGISTERED PROFESSIONAL ENGINEER
BALWINDER S. GREWAL
C 49122
EXP. 9/30/14
STATE OF CALIFORNIA

PUBLIC WORKS DEPARTMENT

THE CITY OF BRENTWOOD

SCHOOL CROSSWALK SIGNS

BALWINDER S. GREWAL CITY ENGINEER

DATE: DEC. 31, 2013

REVISED:

SHEET No.

ST-40

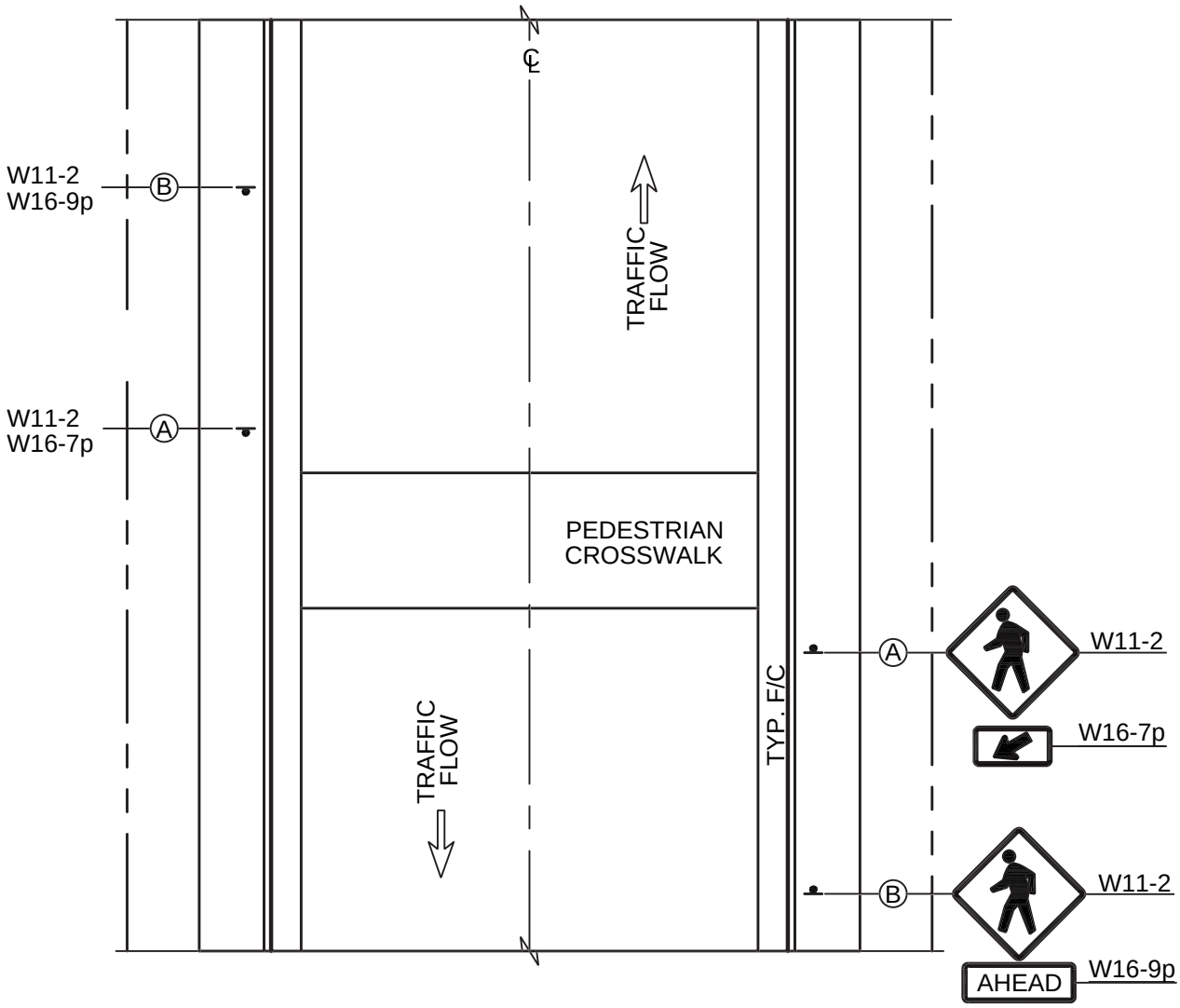

NOTE:

1. SIGNS ARE FLUORESCENT YELLOW GRAIN MICROPRISMATIC BACKGROUND AND EC TRANSPARENT OVERLAY FILM BLACK 1178.

(Not To Scale)

REGISTERED PROFESSIONAL ENGINEER
BALWINDER S. GREWAL
C 49122
EXP. 9/30/14
STATE OF CALIFORNIA

PUBLIC WORKS DEPARTMENT

THE CITY OF BRENTWOOD

PEDESTRIAN CROSSWALK SIGNS

BALWINDER S. GREWAL CITY ENGINEER

DATE: DEC. 31, 2013

REVISED:

SHEET No.

ST-41

ATTENTION:
ADDITIONAL CONDITIONS ON THE ACTUAL PERMIT MAY REQUIRE ALTERNATE BACKFILL MATERIALS.

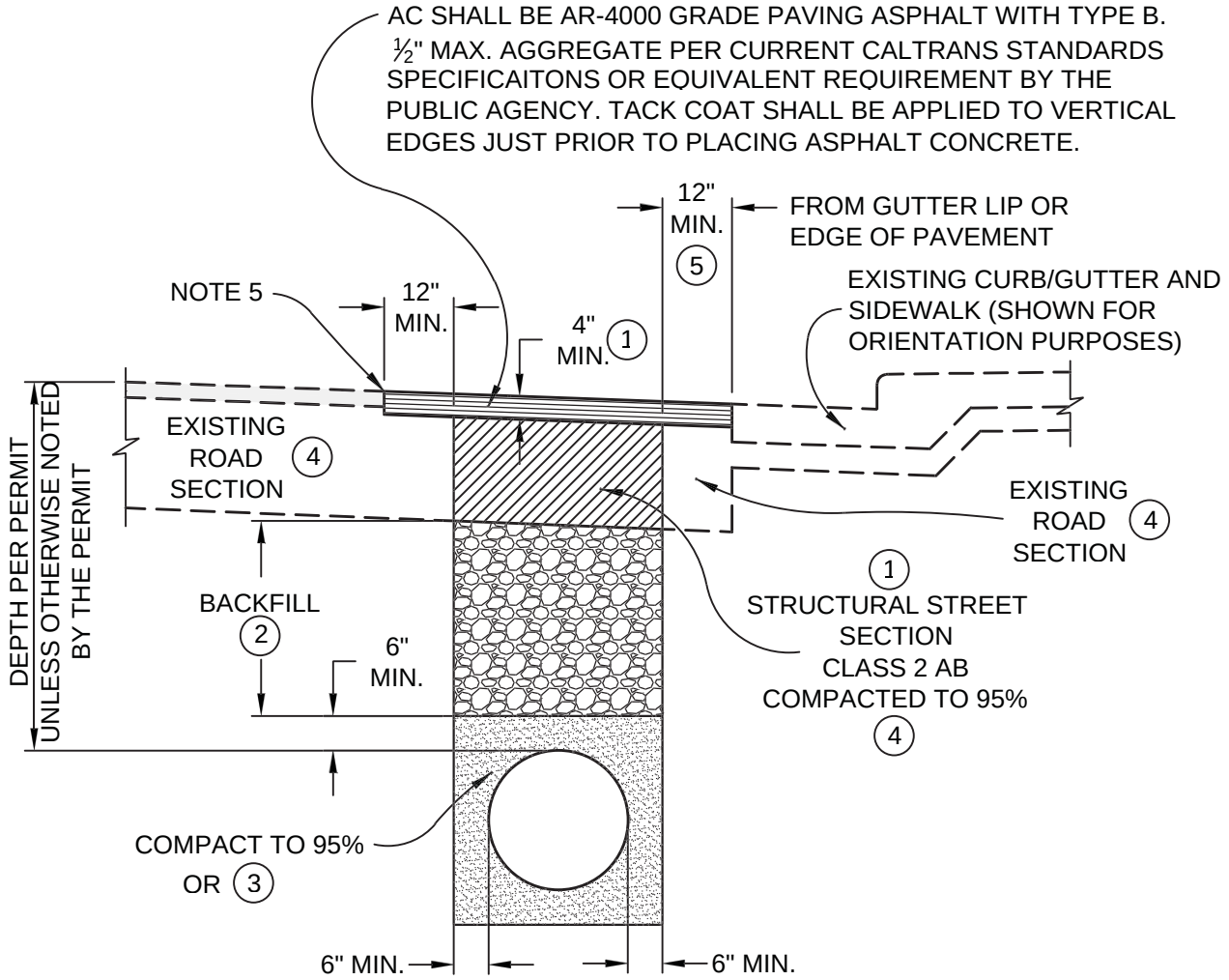

LEGEND:

NEW AC PAVEMENT SECTION

EXISTING AC PAVEMENT SECTION

TRENCH CUT

STRUCTURE BACKFILL MAY BE REPLACED BY SUITABLE NATIVE MATERIAL AS APPROVED BY THE PUBLIC AGENCY. STRUCTURE BACKFILL SHALL BE COMPACTED TO 95% RELATIVE COMPACTION.

NOTE:

FOR GENERAL NOTES, SEE ST-42d.

(Not To Scale)

REGISTERED PROFESSIONAL ENGINEER
BALWINDER S. GREWAL
C 49122
EXP. 9/30/14
STATE OF CALIFORNIA

PUBLIC WORKS DEPARTMENT

THE CITY OF BRENTWOOD

STANDARD TRENCH DETAIL
TRENCH CUT

BALWINDER S. GREWAL CITY ENGINEER

DATE: MARCH, 2005
REVISED: DEC. 31, 2013

SHEET No.
ST-42a

ATTENTION:
ADDITIONAL CONDITIONS ON THE ACTUAL PERMIT MAY REQUIRE ALTERNATE BACKFILL MATERIALS.

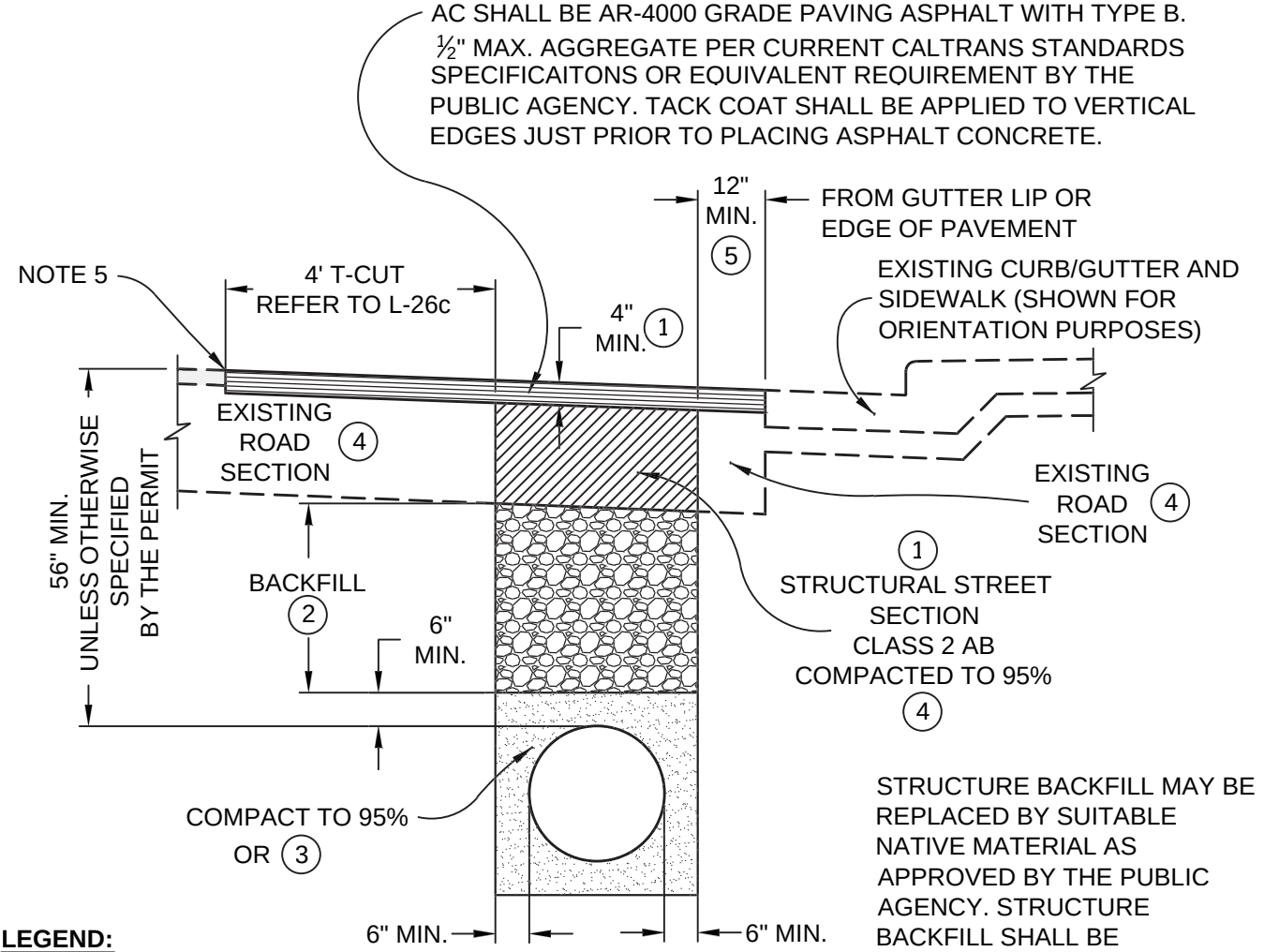

STRUCTURE BACKFILL MAY BE REPLACED BY SUITABLE NATIVE MATERIAL AS APPROVED BY THE PUBLIC AGENCY. STRUCTURE BACKFILL SHALL BE COMPACTED TO 95% RELATIVE COMPACTION.

TRENCH CUT

LEGEND:

NEW AC PAVEMENT SECTION

EXISTING AC PAVEMENT SECTION

NOTE:

FOR GENERAL NOTES, SEE ST-42d.

(Not To Scale)

REGISTERED PROFESSIONAL ENGINEER
BALWINDER S. GREWAL
C 49122
EXP. 9/30/14
STATE OF CALIFORNIA

PUBLIC WORKS DEPARTMENT

THE CITY OF BRENTWOOD

STANDARD TRENCH DETAIL T-CUT

BALWINDER S. GREWAL CITY ENGINEER

DATE:	MARCH, 2005	SHEET No.
REVISED:	DEC. 31, 2013	ST-42b

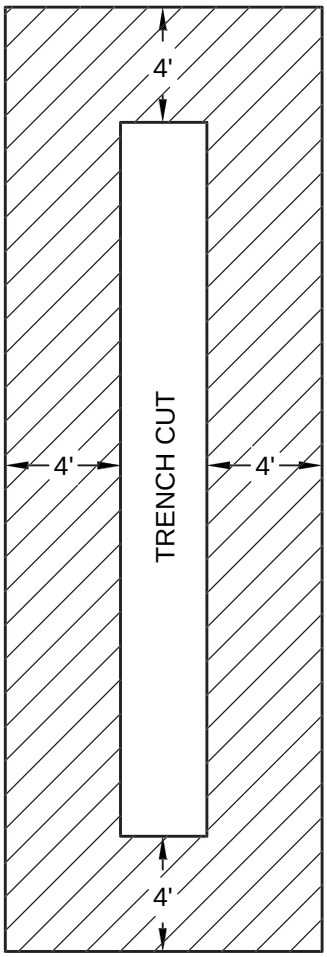

TRENCH CUT PLAN VIEW

LEGEND:

TRENCH CUT

T-CUT

(Not To Scale)

REGISTERED PROFESSIONAL ENGINEER
BALWINDER S. GREWAL
C 49122
EXP. 9/30/14
STATE OF CALIFORNIA

PUBLIC WORKS DEPARTMENT

THE CITY OF BRENTWOOD

STANDARD TRENCH DETAIL PLAN VIEW

BALWINDER S. GREWAL CITY ENGINEER

DATE: MARCH, 2005

REVISED: DEC. 31, 2013

SHEET No.

ST-42c

NOTES:

1. A STREET ENCROACHMENT PERMIT IS REQUIRED FOR ALL WORK WITHIN THE PUBLIC RIGHT-OF-WAY.

2. ALL WORK TO BE DONE IN ACCORDANCE WITH THE PUBLIC AGENCY'S STANDARDS AND SPECIFICATIONS OR AS INDICATED IN THE STREET ENCROACHMENT PERMIT.

3. UNDERGROUND SERVICE ALERT (U.S.A.) 1-800-227-2600 SHALL BE NOTIFIED 48 HOURS PRIOR TO BEGINNING WORK.

4. ALL EXCAVATIONS SHALL CONFORM TO THE REQUIREMENTS OF CAL OSHA.

5. ASPHALT SHALL BE CUT THROUGH THE FULL THICKNESS OF EXISTING AC AND TO NEAT STRAIGHT LINES WITH A POWER DRIVEN SAW OR GRINDER BEFORE FINISHED ASPHALT CONCRETE IS PLACED. PAVEMENT EDGES DAMAGED DURING CONSTRUCTION SHALL BE CUT TO NEAT LINES PRIOR TO PAVING.

6. TRENCH BACKFILL FOR EXCAVATIONS OUTSIDE OF THE PAVED AREA MAY CONSIST OF EXISTING MATERIAL OR OTHER SUITABLE BACKFILL MATERIAL AS APPROVED BY THE INSPECTOR TO THE FINISHED GRADE. THE BEDDING MATERIAL AND DIMENSIONS SHALL BE PER THE SPECIFICATION OF THE UTILITY INSTALLING THE FACILITY. THE TRENCH BACKFILL AND BEDDING MATERIAL SHALL HAVE A MINIMUM RELATIVE COMPACTION OF 95%.

7. IF COVER IS LESS THAN 2.0 FEET SPECIAL DESIGN IS REQUIRED WITH APPROVAL BY THE PUBLIC AGENCY.

1. THE STRUCTURAL STREET SECTION SHALL MATCH EXISTING PAVEMENT SECTION AC OR SHALL BE 4" AC ON 12" AB WHICHEVER IS GREATER. CONCRETE CAP OR FULL DEPTH AC TO BE USED AS DIRECTED BY PUBLIC AGENCY.

2. STRUCTURAL BACKFILL SHALL BE CLASS 2 AGGREGATE BASE (AB) OR OTHER SUITABLE MATERIAL AS APPROVED BY THE PUBLIC AGENCY, BACKFILL SHALL BE COMPACTED TO 95% RELATIVE COMPACTION.

3. MATERIALS AND DIMENSIONS PER UTILITY OWNER AND PIPE MANUFACTURER REQUIREMENTS OR AS CONTAINED IN UTILITY SPECIFICATIONS.

4. WHEN P.C.C. PAVEMENT SECTION IS ENCOUNTERED IN THE TRENCH, THE P.C.C. PAVEMENT SECTION SHALL BE REPLACED WITH 12" OF DEEP LIFT ASPHALT.

5. WHERE THE EDGE OF THE TRENCH IS WITHIN 3 FEET OF A GUTTER LIP OR THE EDGE OF PAVEMENT, AC PAVEMENT BETWEEN THE TRENCH CUT AND THE GUTTUER LIP/EDGE OF PAVEMENT SHALL BE REMOVED AND REPLACED.

(Not To Scale)

REGISTERED PROFESSIONAL ENGINEER
BALWINDER S. GREWAL
C 49122
EXP. 9/30/14
STATE OF CALIFORNIA

PUBLIC WORKS DEPARTMENT

THE CITY OF BRENTWOOD

STANDARD TRENCH DETAIL GENERAL NOTES

BALWINDER S. GREWAL CITY ENGINEER

DATE:	MARCH, 2005	SHEET No.
REVISED:	DEC. 31, 2013	ST-42d

* OR APPROVED EQUAL

** THE USE OF RECYCLED A.B. SHALL NOT BE ALLOWED

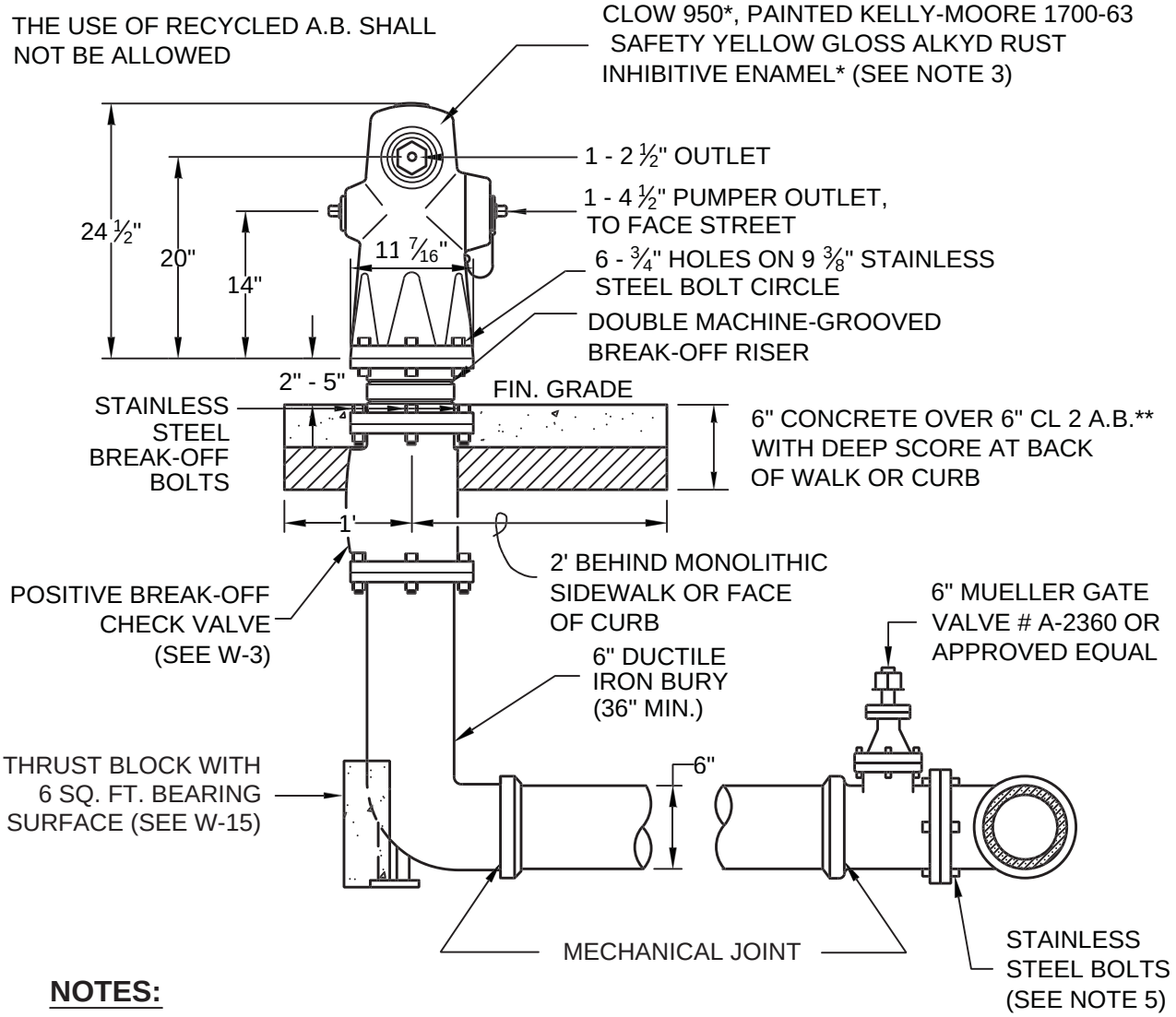

NOTES:

1. FOR RUNS GREATER THAN 35 FEET, A SECOND VALVE SHALL BE PLACED BETWEEN 8 AND 18 FEET FROM THE HYDRANT.
2. PLACE BLUE, TWO-WAY REFLECTIVE PAVEMENT MARKER OPPOSITE HYDRANT 3 FEET IN FROM CENTERLINE OF STREET.
3. HYDRANTS SHALL COMPLY WITH THE LATEST REVISION OF AWWA C503.
4. RED CURB OPPOSITE THE FIRE HYDRANT IS NOT REQUIRED UNLESS DIRECTED BY THE CITY ENGINEER.
5. ALL BOLTS CONNECTING TO THE WATERLINE SHALL BE STAINLESS STEEL.

(Not To Scale)

REGISTERED PROFESSIONAL ENGINEER
BALWINDER S. GREWAL
C 49122
EXP. 9/30/14
STATE OF CALIFORNIA

PUBLIC WORKS DEPARTMENT

THE CITY OF BRENTWOOD

RESIDENTIAL FIRE HYDRANT INSTALLATION

BALWINDER S. GREWAL CITY ENGINEER

DATE: APR. 29, 2005

REVISED: DEC. 31, 2013

SHEET No. **W-1**

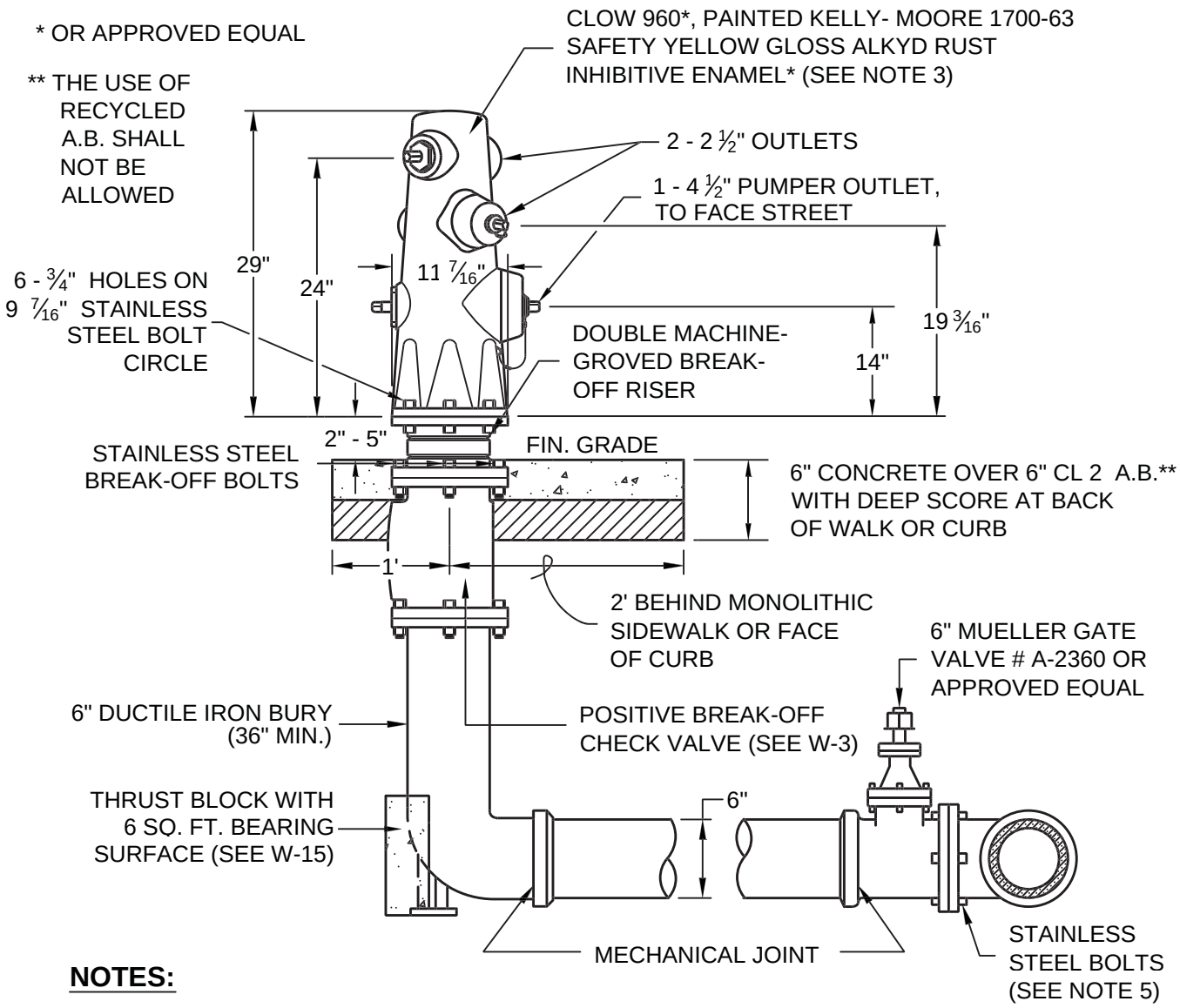

NOTES:

1. FOR RUNS GREATER THAN 35 FEET, A SECOND VALVE SHALL BE PLACED BETWEEN 8 AND 18 FEET FROM THE HYDRANT.
2. PLACE BLUE, TWO-WAY REFLECTIVE PAVEMENT MARKER OPPOSITE HYDRANT 3 FEET IN FROM CENTERLINE OF STREET.
3. HYDRANTS SHALL COMPLY WITH THE LATEST REVISION OF AWWA C503.
4. RED CURB OPPOSITE THE FIRE HYDRANT IS NOT REQUIRED UNLESS DIRECTED BT THE CITY ENGINEER.
5. ALL BOLTS CONNECTING TO THE WATERLINE SHALL BE STAINLESS STEEL.

(Not To Scale)

REGISTERED PROFESSIONAL ENGINEER
BALWINDER S. GREWAL
C 49122
EXP. 9/30/14
STATE OF CALIFORNIA

PUBLIC WORKS DEPARTMENT

THE CITY OF BRENTWOOD

INDUSTRIAL/COMMERCIAL FIRE HYDRANT INSTALLATION

BALWINDER S. GREWAL CITY ENGINEER

DATE:	APR. 29, 2005	SHEET No.
REVISED:	DEC. 31, 2013	W-2

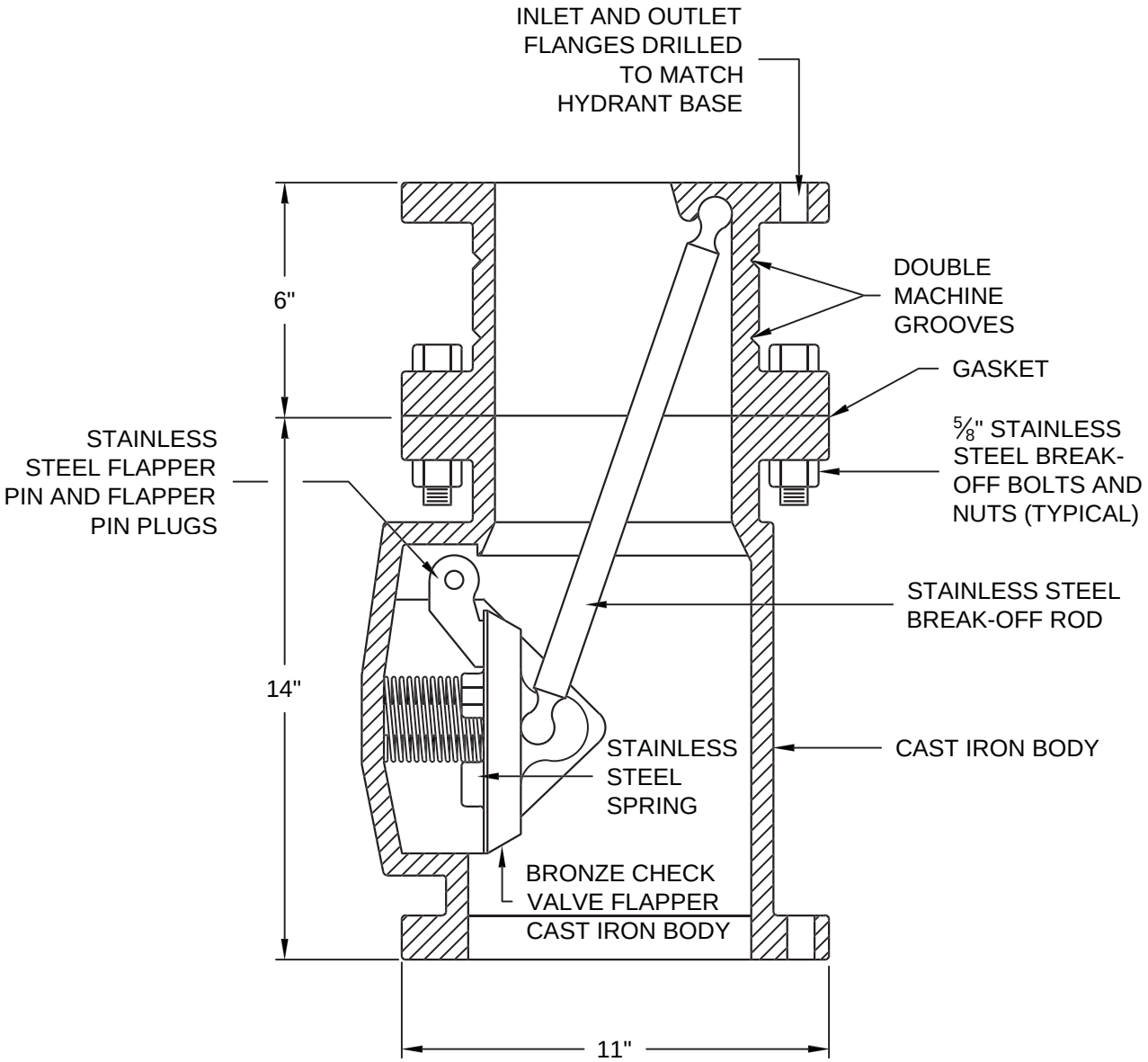

(Not To Scale)

REGISTERED PROFESSIONAL ENGINEER
BALWINDER S. GREWAL
C 49122
EXP. 9/30/14
STATE OF CALIFORNIA

PUBLIC WORKS DEPARTMENT

THE CITY OF BRENTWOOD

FIRE HYDRANT BREAK-OFF CHECK VALVE

BALWINDER S. GREWAL CITY ENGINEER

DATE: NOV. 30, 1998

REVISED: DEC. 31, 2013

SHEET No.

W-3

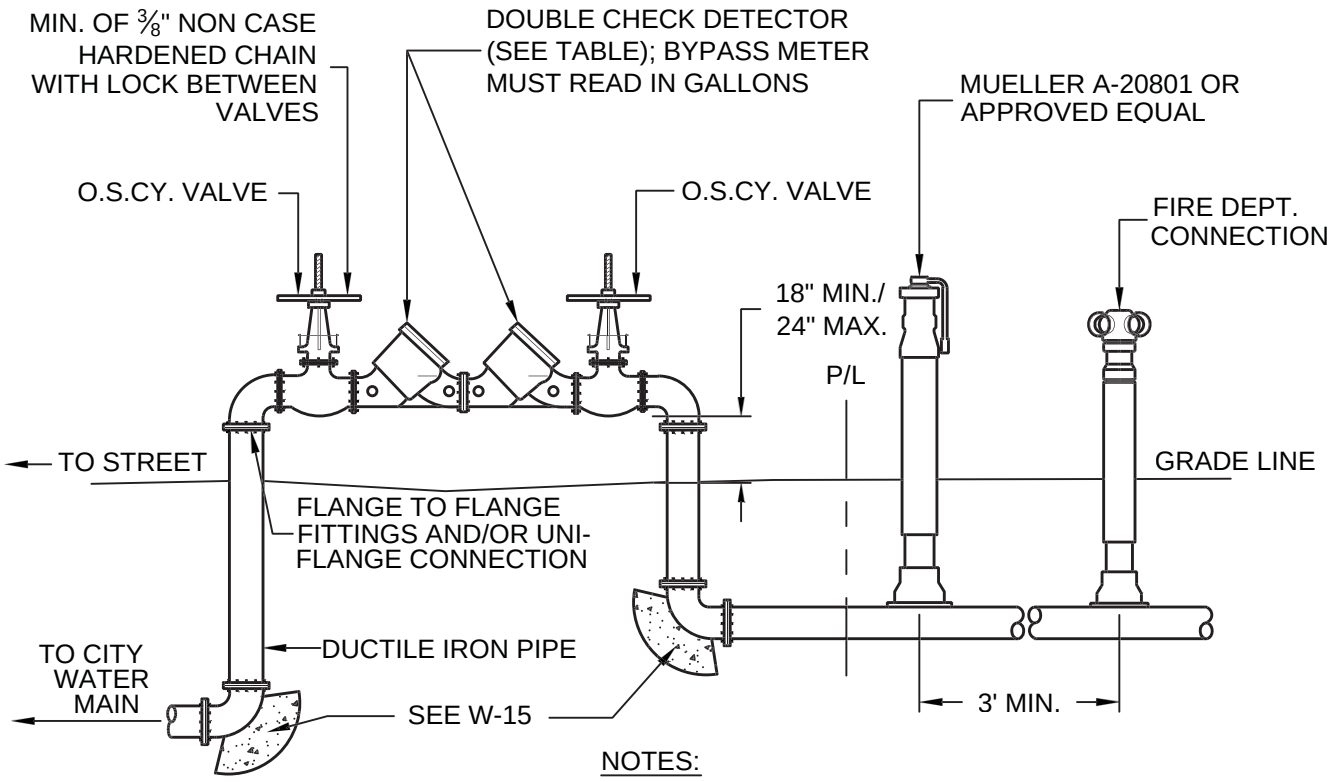

NOTES:

1. ANY DEVIATION FROM DESIGN SHALL BE APPROVED IN WRITING PRIOR TO PROJECT APPROVAL BY THE CITY ENGINEER.
2. THE FIRE DEPARTMENT CONNECTION SHOULD NOT BE MORE THAN 50' AWAY FROM A FIRE HYDRANT.
3. AN APPROVED FREEZE PROTECTION IS REQUIRED ON THE DOUBLE CHECK DETECTOR ASSEMBLY INCLUDING METER.
4. THIS STANDARD PLAN HAS BEEN REVIEWED AND APPROVED BY THE EAST DIABLO FIRE PROTECTION DISTRICT.
5. ALL FITTING MUST HAVE STAINLESS STEEL BOLTS.
6. INSTALL CATHODIC PROTECTION ON ALL METALLIC RISERS PER CP-9.

DOUBLE DETECTOR CHECK ASSEMBLY		
MAKE*	MODEL*	SIZE
FEBCO	805-YD	ALL SIZES
	806-YD	
	856	
	876V	
CONBRACO	40-600-C	
WATTS	709-DDC	
WILKINS	950-DA	
	350-DA	

* OR EQUIVALENT AS APPROVED BY CITY ENGINEER

(Not To Scale)

REGISTERED PROFESSIONAL ENGINEER
BALWINDER S. GREWAL
C 49122
EXP. 9/30/14
STATE OF CALIFORNIA

PUBLIC WORKS DEPARTMENT

THE CITY OF BRENTWOOD

FIRE PROTECTION ASSEMBLY

BALWINDER S. GREWAL CITY ENGINEER

DATE:	AUG. 15, 2003	SHEET No.
REVISED:	DEC. 31, 2013	W-4

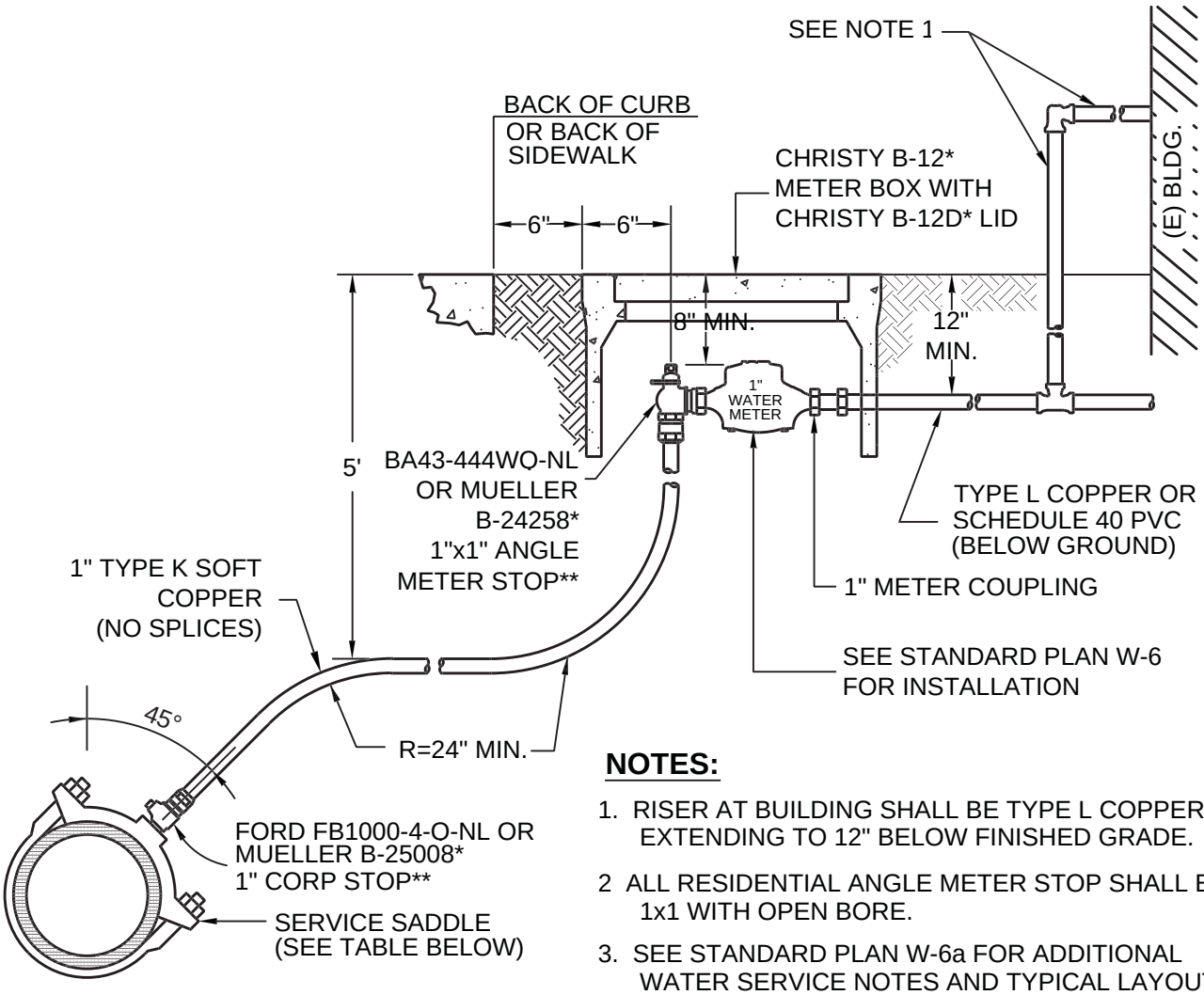

NOTES:

1. RISER AT BUILDING SHALL BE TYPE L COPPER EXTENDING TO 12" BELOW FINISHED GRADE.
2. ALL RESIDENTIAL ANGLE METER STOP SHALL BE 1x1 WITH OPEN BORE.
3. SEE STANDARD PLAN W-6a FOR ADDITIONAL WATER SERVICE NOTES AND TYPICAL LAYOUT.

* OR APPROVED EQUAL
** FULL PORT BALL VALVE TYPE

MUELLER SERVICE SADDLE*		FORD SERVICE SADDLE*
6" MAIN	H-13441	S902-604
8" MAIN	H-13442	S902-804
10" MAIN	H-13443	S902-1004
12" MAIN	H-13444	S902-1204

(Not To Scale)

REGISTERED PROFESSIONAL ENGINEER
BALWINDER S. GREWAL
C 49122
EXP. 9/30/14
STATE OF CALIFORNIA

PUBLIC WORKS DEPARTMENT

THE CITY OF BRENTWOOD

STANDARD WATER SERVICE

BALWINDER S. GREWAL CITY ENGINEER

DATE: JAN. 20, 2005
REVISED: DEC. 31, 2013

SHEET No.
W-5

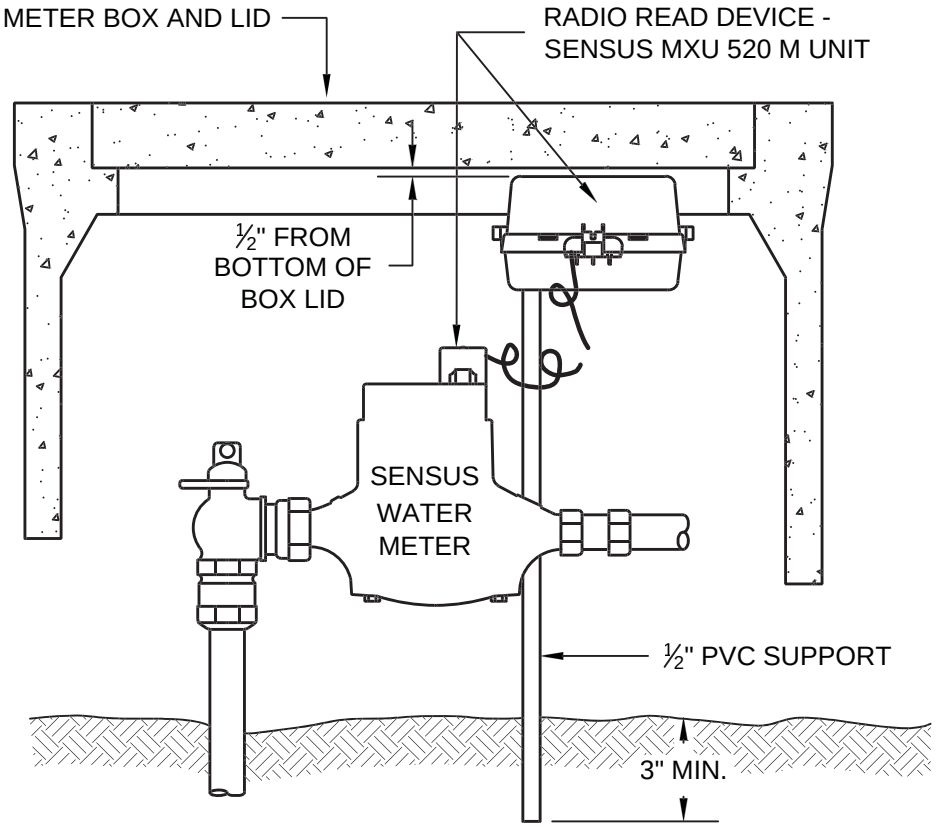

NOTES:

1. SENSUS WATER METER (REGISTERING IN GALLONS) AND MXU 520 M UNIT ARE AVAILABLE FROM "GOLDEN STATE FLOW MEASUREMENT", 4821 GOLDEN FOOTHILL PARKWAY, SUITE 100 EL DORADO HILLS, CA 95762; PHONE (916) 933-9554.
2. NO SUBSTITUTION IS ALLOWED ON THE SENSUS WATER METER AND THE MXU UNIT.
3. THE MXU UNIT SHALL BE INSTALLED NEXT TO THE METER.
4. EXCESS WIRE SHOULD BE COILED LOOSELY IN METER BOX.
5. A MINIMUM OF 3/4" WATER METER SIZE SHALL BE USED FOR A SINGLE FAMILY RESIDENTIAL WITH A YARD. HOWEVER, A MINIMUM 1 " METER SIZE SHALL BE INSTALLED IF ONE OF THE FOLLOWING CONDITIONS EXIST:
   - THE MINIMUM STATIC PRESSURE IN THE STREET IS 50 PSI OR LESS DURING THE MORNING PEAK SUMMER MONTHS, OR
   - THE LOT SIZE IS 7000 SQ. FT. OR GREATER, OR
   - FIRE SPRINKLERS ARE INSTALLED.
6. SEE STANDARD PLAN W-6a FOR ADDITIONAL WATER SERVICE NOTES AND TYPICAL LAYOUT.

(Not To Scale)

REGISTERED PROFESSIONAL ENGINEER
BALWINDER S. GREWAL
C 49122
EXP. 9/30/14
STATE OF CALIFORNIA

PUBLIC WORKS DEPARTMENT

THE CITY OF BRENTWOOD

STANDARD METER INSTALLATION

BALWINDER S. GREWAL CITY ENGINEER

DATE:	APR. 17, 2008	SHEET No.
REVISED:	DEC. 31, 2013	W-6

WATER SERVICE NOTES:

1. WATER METERS SHALL BE SENSUS WITH SENSUS MXU 505 UNIT.
2. METERS SHALL BE INSTALLED CENTERED IN THE METER BOX.
3. METER TO BE SET AT TIME OF PLUMBLING EXTENSION TO BUILDING.
4. METER BOX SHALL BE FREE FROM DEBRIS, DIRT AND LITTER.
5. IRRIGATION SERVICE AND/OR WELL ONSITE REQUIRES BACKFLOW PREVENTION DEVICE BEHIND METER.
6. INSTALL CATHODIC PROTECTION PER CP-12.
7. ALL NON-POTABLE APPLICATIONS SHALL BE COLOR-CODED PURPLE.
8. ALL BOLTS SHALL BE STAINLESS STEEL.
9. FOR WATER SERVICE STANDARDS, REFER TO W-5 AND W-7; FOR STANDARD METER INSTALLATION, REFER TO W-6.
10. ALL NON-POTABLE APPLICATIONS REQUIRE A PERMIT TO USE NON-POTABLE WATER ISSUED BY THE PUBLIC WORKS/OPERATIONS DIVISION.

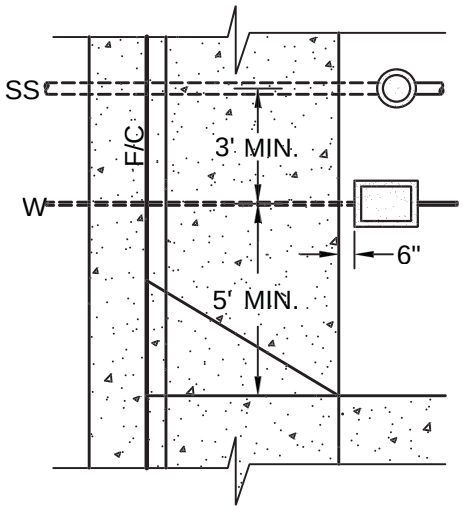

TYPICAL LAYOUT

(Not To Scale)

REGISTERED PROFESSIONAL ENGINEER
BALWINDER S. GREWAL
C 49122
EXP. 9/30/14
STATE OF CALIFORNIA

PUBLIC WORKS DEPARTMENT

THE CITY OF BRENTWOOD

WATER SERVICE NOTES

BALWINDER S. GREWAL CITY ENGINEER

DATE:	JUNE 20, 2003	SHEET No.
REVISED:	DEC. 31, 2013	W-6a

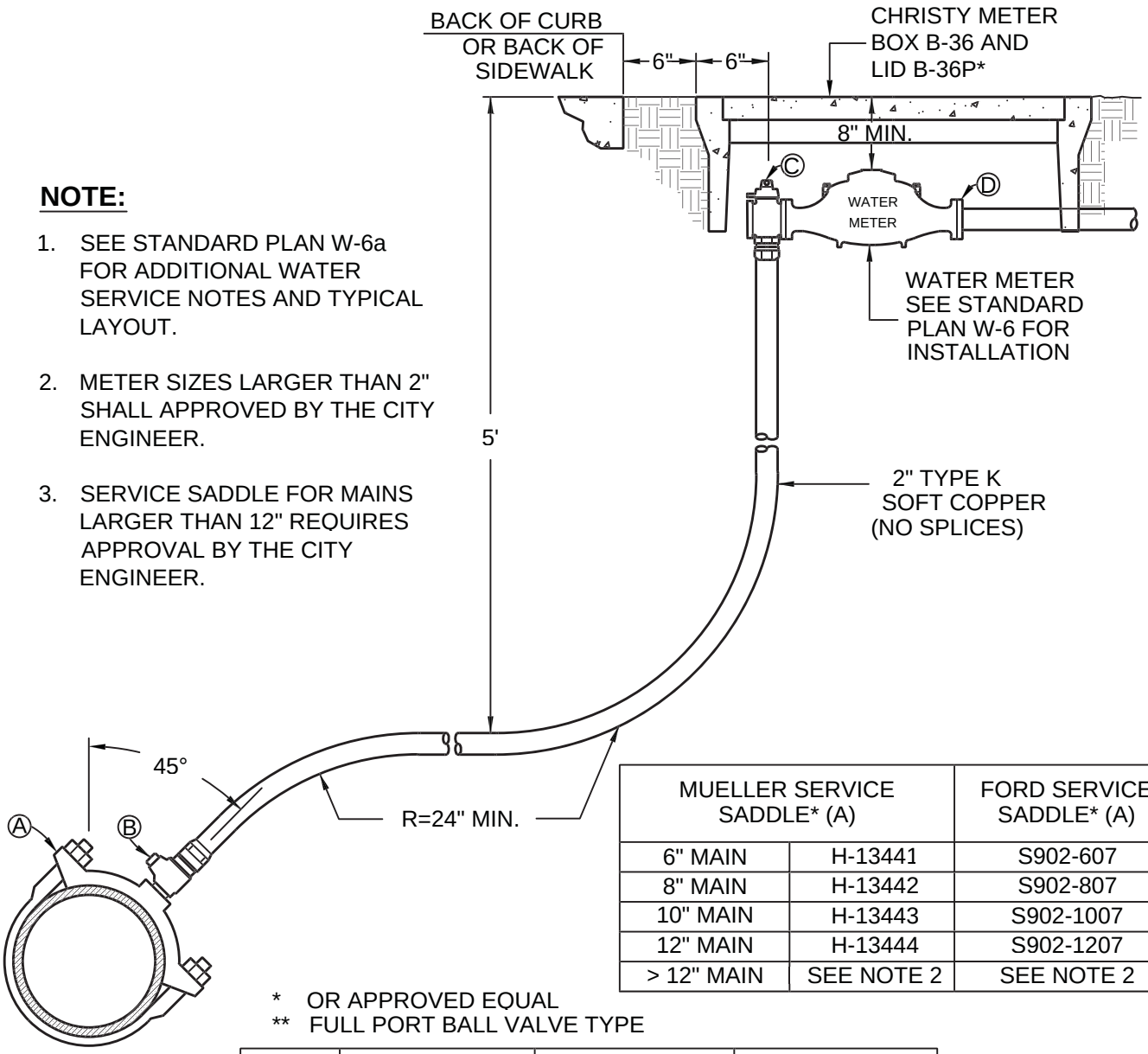

NOTE:

1. SEE STANDARD PLAN W-6a FOR ADDITIONAL WATER SERVICE NOTES AND TYPICAL LAYOUT.
2. METER SIZES LARGER THAN 2" SHALL APPROVED BY THE CITY ENGINEER.
3. SERVICE SADDLE FOR MAINS LARGER THAN 12" REQUIRES APPROVAL BY THE CITY ENGINEER.

MUELLER SERVICE SADDLE* (A)		FORD SERVICE SADDLE* (A)
6" MAIN	H-13441	S902-607
8" MAIN	H-13442	S902-807
10" MAIN	H-13443	S902-1007
12" MAIN	H-13444	S902-1207
> 12" MAIN	SEE NOTE 2	SEE NOTE 2

* OR APPROVED EQUAL
** FULL PORT BALL VALVE TYPE

	METER SIZE	CORPORATION STOP* (B)**	ANGLE METER STOP* (C)**	METER COUPLING* (D)
MUELLER	1-½"	2" B-25008	2" B-24276	1 ½" FLANGE
	2"			2" FLANGE
FORD	1-½"	FB1000-7-Q-NL	BFA43-777W-Q-NL	CF31-66-NL
	2"			CF31-77-NL

(Not To Scale)

REGISTERED PROFESSIONAL ENGINEER
BALWINDER S. GREWAL
C 49122
EXP. 9/30/14
STATE OF CALIFORNIA

PUBLIC WORKS DEPARTMENT

THE CITY OF BRENTWOOD

LARGE DIAMETER WATER SERVICE

BALWINDER S. GREWAL CITY ENGINEER

DATE: JUNE 20, 2003
REVISED: DEC. 31, 2013

SHEET No.
W-7

NOTES:

1. ALL FITTINGS, INCLUDING PRESSURE REDUCER, SHALL BE BRASS.
2. WHEN REQUIRED BY CITY, PROVIDE CONCRETE PAD AND ENCLOSURE PER STANDARD PLAN I-5.
3. FREEZE PROTECTION SHALL BE MADE OF WATER RESISTANT CANVAS FILLED WITH R-19 FIBERGLASS INSULATION AND SHALL BE SIZED TO FIT THE DEVICE.
4. FOR A LIST OF APPROVED BACKFLOW PREVENTION DEVICE ASSEMBLY*, REFER TO STANDARD PLAN W-8a.
5. INSTALL CATHODIC PROTECTION ON ALL METALLIC RISERS PER CP-9.

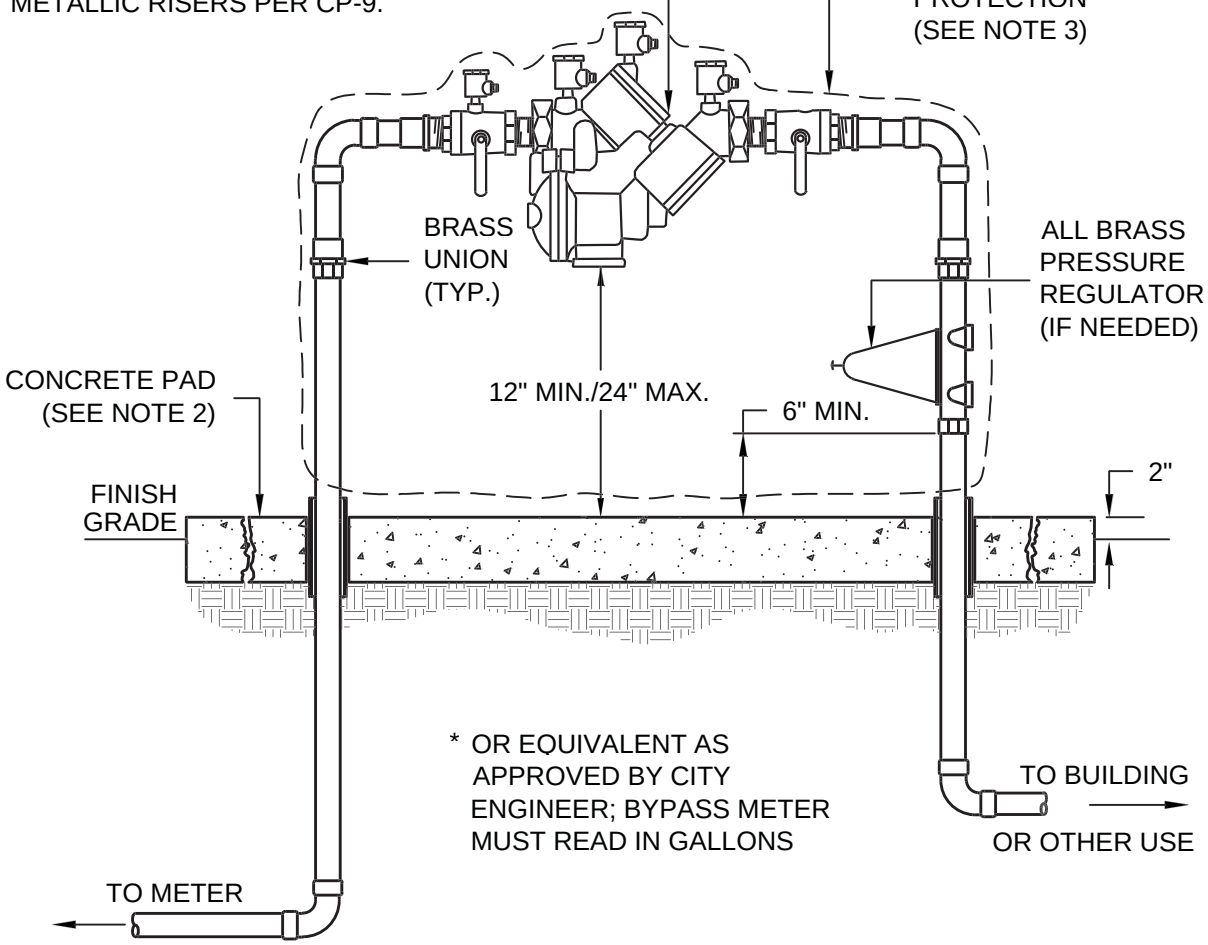

(Not To Scale)

REGISTERED PROFESSIONAL ENGINEER
BALWINDER S. GREWAL
C 49122
EXP. 9/30/14
STATE OF CALIFORNIA

PUBLIC WORKS DEPARTMENT

THE CITY OF BRENTWOOD

BACKFLOW PREVENTION DEVICE - UNDER 3" MAIN LINE

BALWINDER S. GREWAL CITY ENGINEER

DATE:	DEC. 3, 2007	SHEET No.
REVISED:	DEC. 31, 2013	W-8

APPROVED REDUCED PRESSURE PRINCIPLE DEVICES

MAKE*	MODEL*	SIZE
FEBCO	825-Y	3/4" - 2"
	825-YA	3/4" - 2"
	825-YD	2-1/2" - 10"
	850	2-1/2" - 10"
	860	2-1/2" - 10"
	870V	2-1/2" - 10"
	876 & 880	ALL
WATTS	909	3/4" - 2"
	773	ALL
	909	2-1/2" - 10"
	950	3/4" - 2"
WILKINS	475	4" - 8"
	950 & 975XL	3/4" - 2"
	975	2-1/2" - 10"
	350 SERIES	2-1/2" - 8"
	375 SERIES	2-1/2" - 8"

* OR EQUIVALENT AS APPROVED BY CITY ENGINEER

APPROVED DOUBLE CHECK DETECTOR ASSEMBLIES FOR FIRE LINES

(BYPASS METER MUST READ IN GALLONS)

MAKE*	MODEL*	SIZE
FEBCO	805-YD	ALL
	806-YD	ALL
	856	ALL
	876V	ALL
WATTS	709-DDC	ALL
WILKINS	450-DA	ALL
	950-DA	ALL
	350-DA	ALL

APPROVED REDUCED PRESSURE PRINCIPLE DETECTOR ASSEMBLIES

(USED WHEN ANTIFREEZE IS USED IN FIRE LINES; BYPASS METER MUST READ IN GALLONS)

MAKE*	MODEL*	SIZE
FEBCO	826-YD	ALL
	860	ALL
	876V	ALL
WATTS	909	ALL
	993 RPDA	ALL
WILKINS	475-DA	ALL
	975-DA	ALL
	375-DA	ALL

NOTE:

FOR THE BACKFLOW PREVENTION DEVICE STANDARD DETAILS, SEE W-8 AND W-9;
FOR THE FIRE PROTECTION ASSEMBLY, SEE W- 4.

(Not To Scale)

REGISTERED PROFESSIONAL ENGINEER
BALWINDER S. GREWAL
C 49122
EXP. 9/30/14
STATE OF CALIFORNIA

PUBLIC WORKS DEPARTMENT

THE CITY OF BRENTWOOD

BACKFLOW PREVENTION DEVICE - ASSEMBLY LIST

BALWINDER S. GREWAL CITY ENGINEER

DATE: DEC. 3, 2007
REVISED: DEC. 31, 2013

SHEET No. W-8a

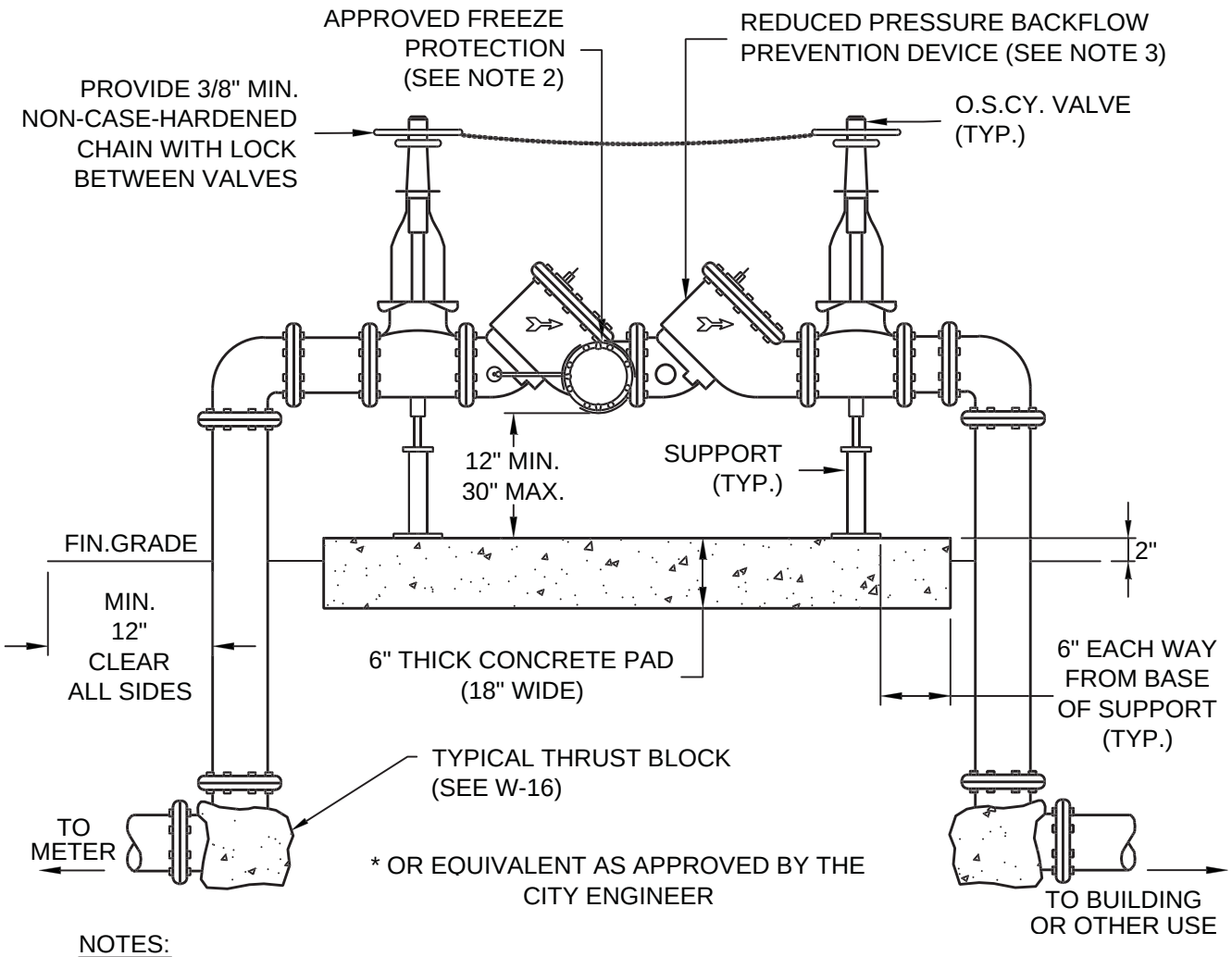

NOTES:

1. ALL FITTINGS SHALL BE DUCTILE IRON.
2. FREEZE PROTECTION SHALL BE MADE OF WATER RESITANT CANVAS FILLED WITH R-19 FIBERGLASS INSULATION AND SHALL BE SIZED TO FIT THE DEVICE.
3. ALL BOLTS SHALL BE STAINLESS STEEL.
4. FOR A LIST OF APPROVED BACKFLOW PREVENTION DEVICE ASSEMBLY*, REFER TO STANDARD PLAN W-8a.
5. INSTALL CATHODIC PROTECTION ON ALL METALLIC RISERS PER CP-9.

(Not To Scale)

REGISTERED PROFESSIONAL ENGINEER
BALWINDER S. GREWAL
C 49122
EXP. 9/30/14
STATE OF CALIFORNIA

PUBLIC WORKS DEPARTMENT

THE CITY OF BRENTWOOD

BACKFLOW PREVENTION DEVICE - 3" TO 10" MAIN LINE

BALWINDER S. GREWAL CITY ENGINEER

DATE:	DEC. 3, 2007	SHEET No.
REVISED:	DEC. 31, 2013	W-9

COMPONENT PARTS	
A	CHRISTY B16 BOX*
B	CHRISTY B16D LID*
C	CHRISTY B16X10 EXTENSION*
D	2" PVC SCH 40 THREADED CAP
E	2" x 4" BRASS NIPPLE
F	2" BRASS 90° STREET ELBOW
G	2" BRASS ANGLE VALVE MATCO-NORCA INC 240T08H WITH BRONZE HANDWHEEL*
H	2" BRASS RISER
I	2" BRASS 90° ELBOW
J	2" x 12" BRASS NIPPLE

* - OR APPROVED EQUAL

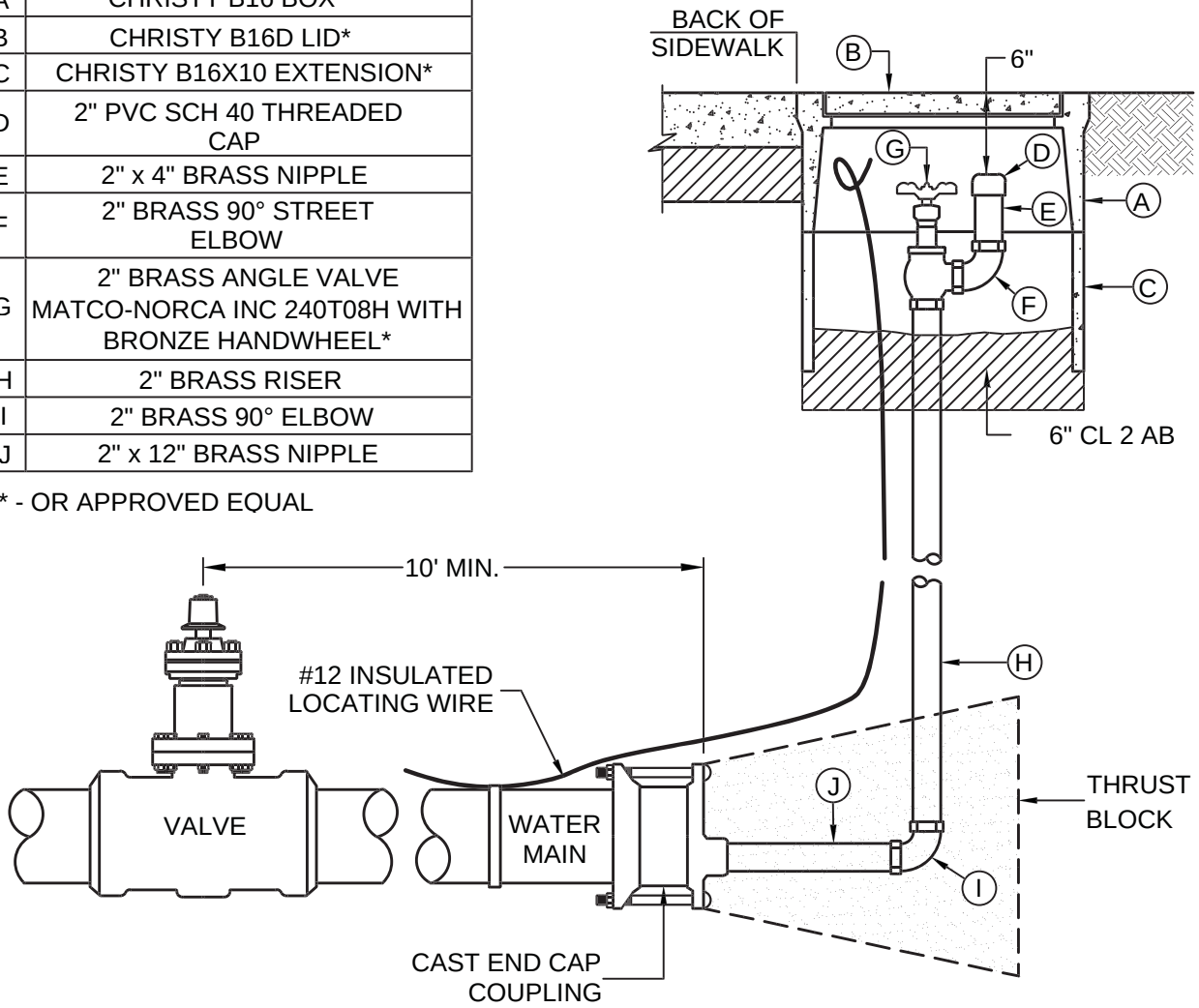

NOTES:

1. A FIRE HYDRANT IS REQUIRED AT THE END OF ALL DEAD END WATER MAINS EXCEPT WHERE A BLOWOFF ASSEMBLY MAY BE INSTALLED AS A TEMPORARY END OF LINE INSTALLATION.
2. LOCATE BLOWOFF ASSEMBLY BEYOND ROADWAY PAVEMENT OR SIDEWALK.

(Not To Scale)

REGISTERED PROFESSIONAL ENGINEER
BALWINDER S. GREWAL
C 49122
EXP. 9/30/14
STATE OF CALIFORNIA

PUBLIC WORKS DEPARTMENT

THE CITY OF BRENTWOOD

2" BLOWOFF ASSEMBLY

BALWINDER S. GREWAL CITY ENGINEER

DATE:	DEC. 3, 2007	SHEET No.
REVISED:	DEC. 31, 2013	W-10

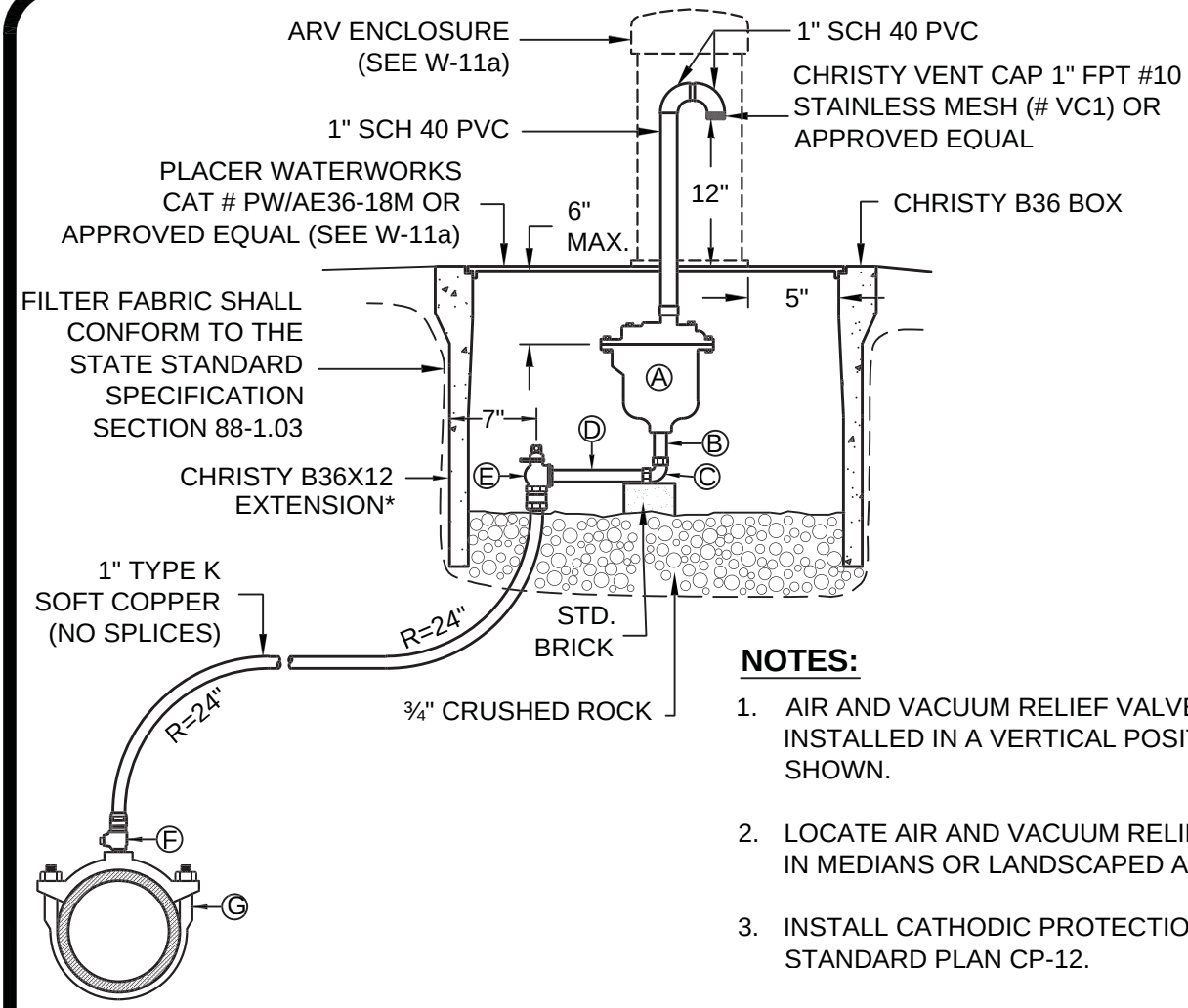

NOTES:

1. AIR AND VACUUM RELIEF VALVE SHALL BE INSTALLED IN A VERTICAL POSITION AS SHOWN.
2. LOCATE AIR AND VACUUM RELIEF VALVES IN MEDIANS OR LANDSCAPED AREA.
3. INSTALL CATHODIC PROTECTION PER STANDARD PLAN CP-12.

COMPONENT PARTS

A	1" CRISPIN UL 10 UNIVERSAL AIR VALVE*						
B	1"x 4" BRASS NIPPLE						
C	1" BRASS 90° ELBOW						
D	1"x 6" BRASS NIPPLE			D	1"x 1" FORD BF43-777W-Q-NL ANGLE METER STOP*		
E	1"x 1" MUELLER B-24258 ANGLE METER STOP*			E	1" FORD FB1000-4-Q-HL COPORATION STOP*		
F	1" MUELLER B-25008 CORPORATION STOP*			F	FORD SADDLE SERVICE WITH 1" CC TAP*		
G	MUELLER SADDLE SERVICE WITH 1" CC TAP*			G	FORD SADDLE SERVICE WITH 1" CC TAP*		
	SIZE	DIP	C-900, CL 200		SIZE	DIP	C-900, CL 200
	6" MAIN	H-16126*	H-13441*		6" MAIN	202B-750-TAP	S902-604
	8" MAIN	H-16130*	H-13442*		8" MAIN	202B-962-TAP	S902-804
	10" MAIN	H-16134*	H-13443*		10" MAIN	202B-1212-TAP	S902-1004
	12" MAIN	H-16137*	H-13444*		12" MAIN	202B-1438-TAP	S902-1204

* OR APPROVED EQUAL

(Not To Scale)

REGISTERED PROFESSIONAL ENGINEER
BALWINDER S. GREWAL
C 49122
EXP. 9/30/14
STATE OF CALIFORNIA

PUBLIC WORKS DEPARTMENT

THE CITY OF BRENTWOOD

STANDARD AIR AND VACUUM RELIEF VALVE

BALWINDER S. GREWAL CITY ENGINEER

DATE: NOV. 9, 2004
REVISED: DEC. 31, 2013

SHEET No.
W-11

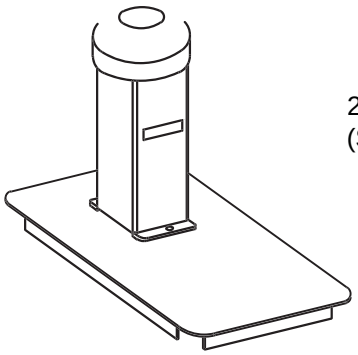

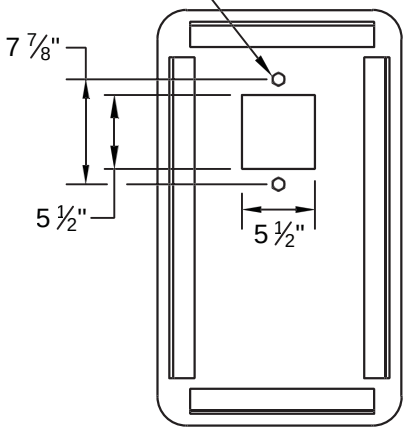

BOTTOM SIDE OF PLATE

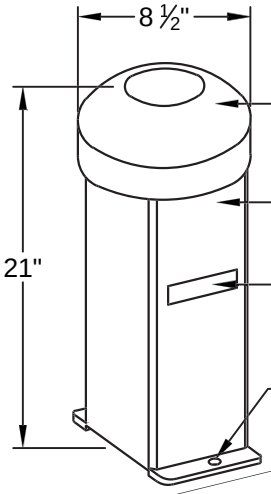

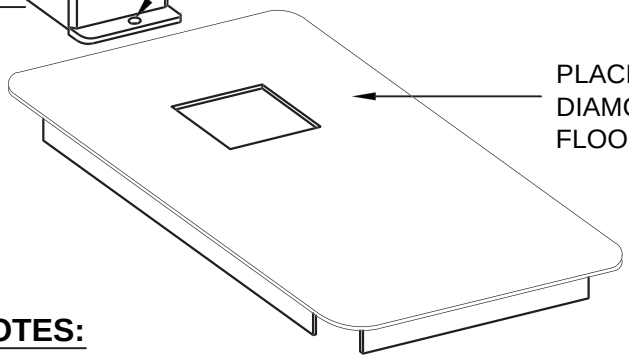

NOTES:

1. ALL METALS SHALL BE CLEANED WITH DEV PREP 88 BY DEVOE #788T0000*.
2. APPLY 2 TO 3 MILLS THICK OF DEVRAN 224HS CATALYZED POLYAMIDE EPOXY PRIMER* (COLOR: HUNTER GREEN) AND DEVTANE 379 CATALYZED ALIPHATIC URETHANE FINISH* TOP COAT TO THE STEEL CAP AND TUBING WALL.
3. LOCK NUTS SHALL BE WELDED TO THE UNDERSIDE OF THE FLOOR PLATE.

* OR APPROVED EQUAL

(Not To Scale)

PUBLIC WORKS DEPARTMENT

THE CITY OF BRENTWOOD

AIR AND VACUUM RELIEF VALVE ENCLOSURE

BALWINDER S. GREWAL CITY ENGINEER

DATE:	NOV. 9, 2004	SHEET No.
REVISED:	DEC. 31, 2013	W-11a

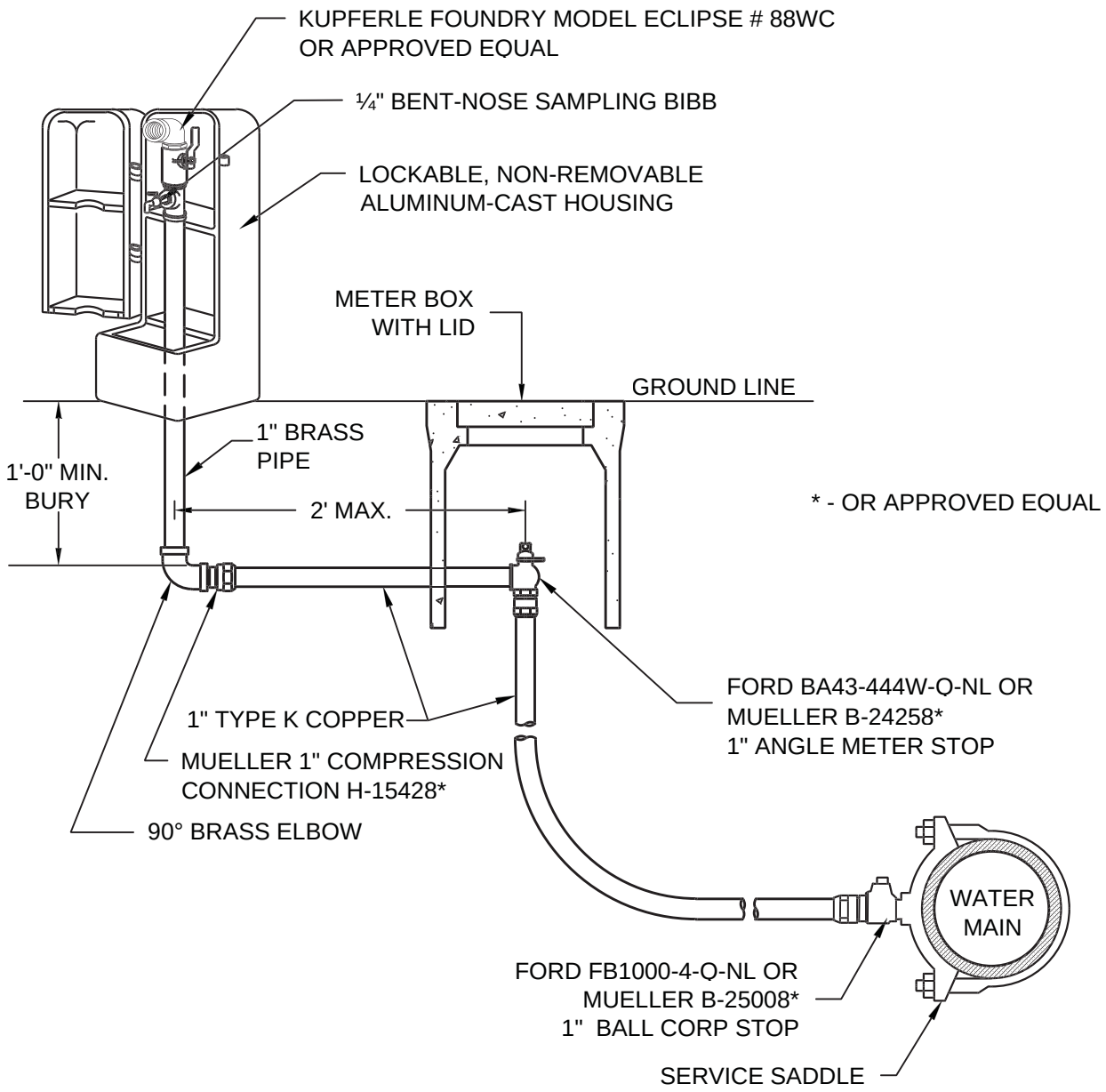

(Not To Scale)

REGISTERED PROFESSIONAL ENGINEER
BALWINDER S. GREWAL
C 49122
EXP. 9/30/14
STATE OF CALIFORNIA

PUBLIC WORKS DEPARTMENT

THE CITY OF BRENTWOOD

WATER QUALITY SAMPLING STATION

BALWINDER S. GREWAL CITY ENGINEER

DATE:	OCT. 31, 2000	SHEET No.
REVISED:	DEC. 31, 2013	W-12

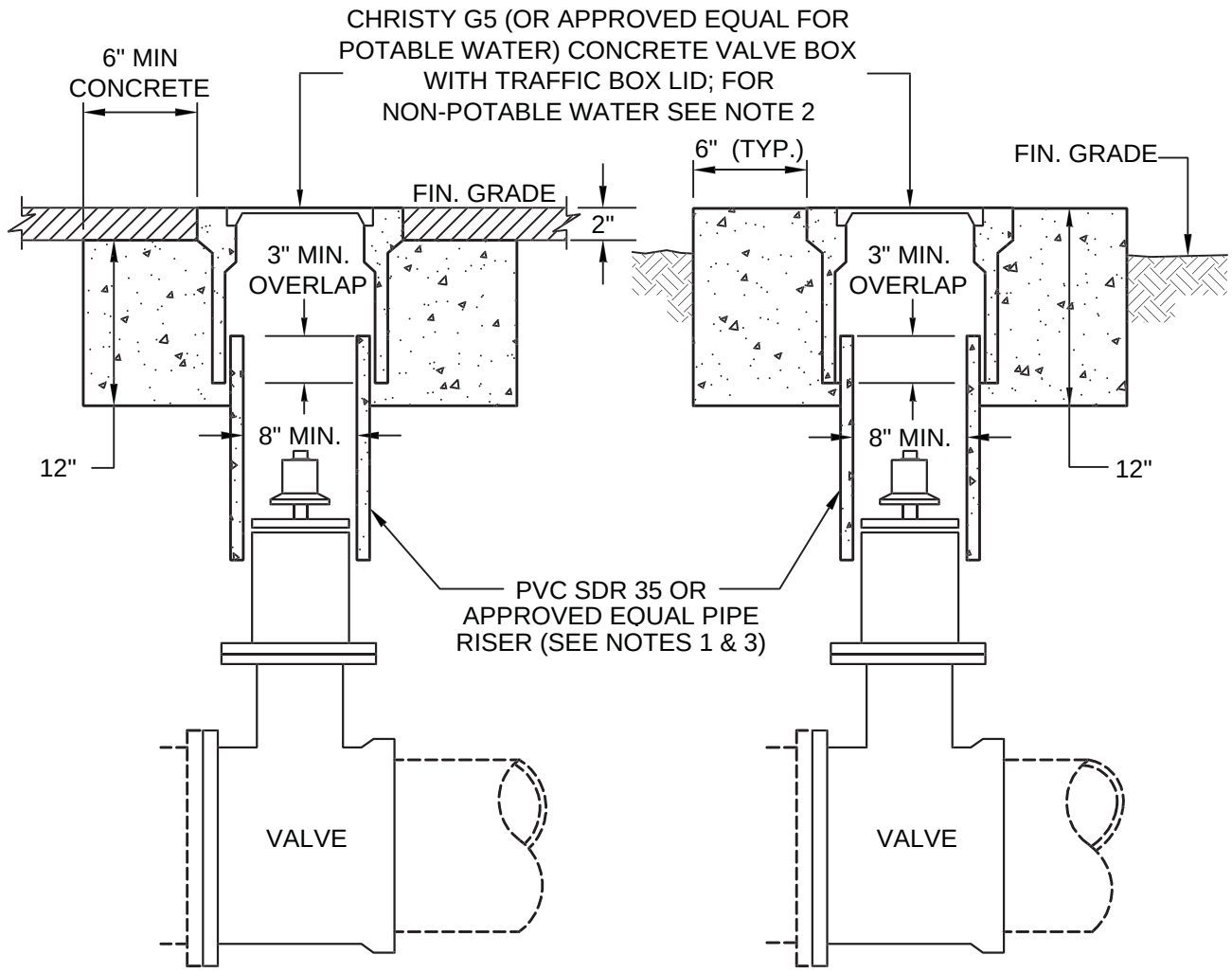

TRAFFIC VALVE BOX

NON-TRAFFIC VALVE BOX

NOTES:

1. VALVE BOX RISER TO BE SET PLUMB AND CENTERED OVER WATER VALVE NUT.
2. VALVE BOX LIDS INSTALLED ON NON-POTABLE WATER LINES SHALL BE TRIANGULAR (CHRISTY G4 OR APPROVED EQUAL), 12-$\frac{3}{4}$" ON EACH SIDE WITH WORDS "NON-POTABLE WATER" CAST ON TO THE LID USING A LETTER SIZE AND LAYOUT AS APPROVED BY THE CITY ENGINEER; LIDS SHALL BE COLOR-CODED PURPLE.
3. RISER SHALL BE USED WHENEVER VALVES ARE INSTALLED OVER 1 FOOT DEEP FROM FINISHED GRADE.

(Not To Scale)

REGISTERED PROFESSIONAL ENGINEER
BALWINDER S. GREWAL
C 49122
EXP. 9/30/14
STATE OF CALIFORNIA

PUBLIC WORKS DEPARTMENT

THE CITY OF BRENTWOOD

VALVE BOX AND RISER INSTALLATION

BALWINDER S. GREWAL CITY ENGINEER

DATE:	JULY 30, 2007	SHEET No.
REVISED:	DEC. 31, 2013	W-13

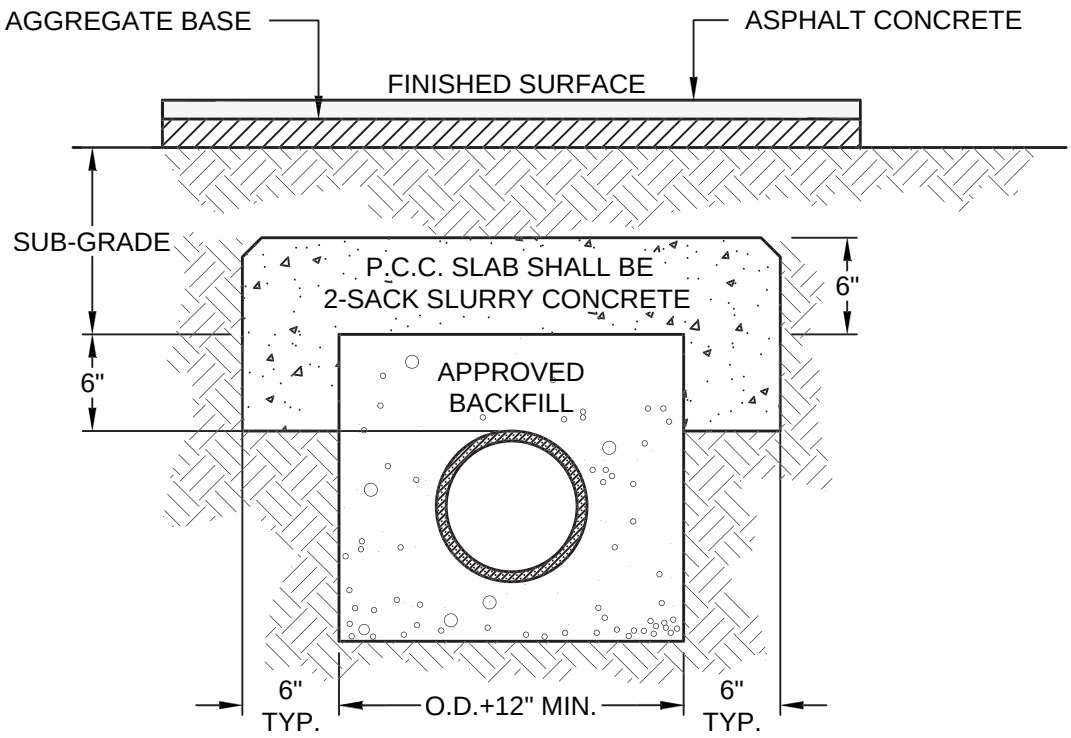

NOTES:

1. CONCRETE CAP SHALL BE REQUIRED WHERE COVER IS LESS THAN 2 FEET FROM SUBGRADE.
2. P.C.C. SLAB SHALL BE 2-SACK SLURRY CONCRETE.
3. REFER TO STANDARD PLAN ST-25, TRENCH AND BACKFILL REQUIREMENTS, FOR TYPICAL FILL OVER WATERMAIN AND OTHER REQUIREMENTS.
4. THE pH VALUE OF ALL BACKFILL MATERIAL SHALL BE TESTED TO BE WITHIN 6.5 TO 7.5 RANGE.
5. P.C.C. SLAB SHALL BE DYED BLUE TO REFLECT THE WATER UTILITY BEING COVERED. FOR UTILITIES OTHER THAN WATER, USE THE UNDERGROUND SERVICE ALERT (USA) COLOR CODE FOR MARKING UNDERGROUND FACILITIES:

GREEN	--	SEWER
PURPLE	--	RECLAIMED WATER
YELLOW	--	GAS OR OIL
ORANGE	--	COMMUNICATION CATV
RED	--	ELECTRIC

(Not To Scale)

REGISTERED PROFESSIONAL ENGINEER
BALWINDER S. GREWAL
C 49122
EXP. 9/30/14
STATE OF CALIFORNIA

PUBLIC WORKS DEPARTMENT

THE CITY OF BRENTWOOD

CONCRETE CAP OVER WATERMAIN

BALWINDER S. GREWAL CITY ENGINEER

DATE:	APRIL 16, 2008	SHEET No.
REVISED:	DEC. 31, 2013	W-14

TYPICAL INSTALLATION		PIPE SIZE			
		6"	8"	10"	12"
REQUIRED BEARING AREA (SQUARE FEET)	90° BEND 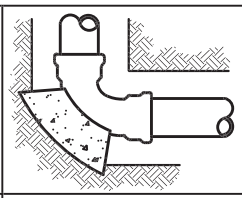	4	7	12	16
	45° BEND 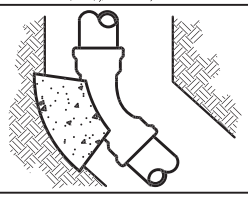	3	5	8	12
	11-1/4" OR 22-1/2" BEND 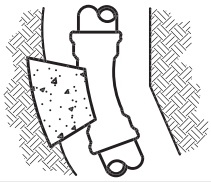	2	3	5	6
	TEE OR DEAD END 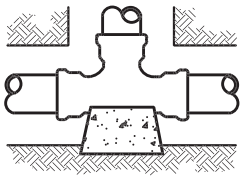	4	7	12	16
	TEE WITH PLUG 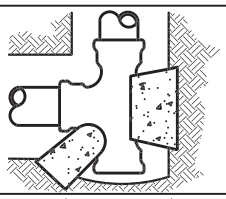	4	7	12	16
	CROSS WITH PLUG 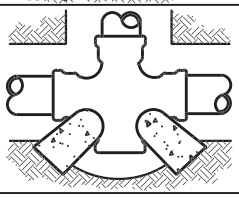	4	7	12	16
	CROSS WITH PLUGS 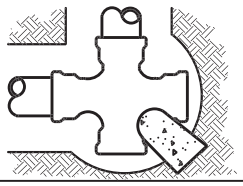	4	7	12	16

NOTES:

1. THRUST BLOCK SHALL BE CLASS "B" CONCRETE AND SHALL BE POURED AGAINST UNDISTURBED SOIL.
2. THE BEARING AREAS GIVEN ARE FOR CLASS 200 PIPE AT TEST PRESSURE OF 150 P.S.I. IN SOIL WITH 1,000 P.S.F. BEARING CAPACITY. INSTALLATIONS USING DIFFERENT PIPE, TEST PRESSURES, AND/OR SOIL TYPES SHALL BE APPROVED BY THE CITY ENGINEER.
3. JOINTS AND FACE OF PLUGS SHALL BE KEPT CLEAR OF CONCRETE.

(Not To Scale)

REGISTERED PROFESSIONAL ENGINEER
BALWINDER S. GREWAL
C 49122
EXP. 9/30/14
STATE OF CALIFORNIA

PUBLIC WORKS DEPARTMENT

THE CITY OF BRENTWOOD

THRUST BLOCK BEARING AREA

BALWINDER S. GREWAL CITY ENGINEER

DATE: APR. 15, 1999
REVISED: DEC. 31, 2013

SHEET No.
W-15

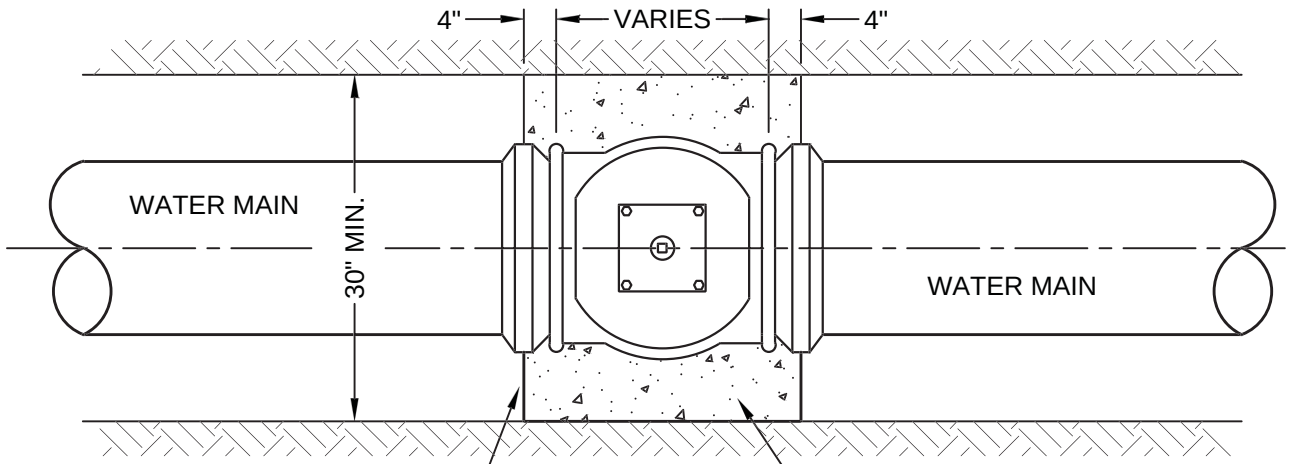

PLAN

COMPACTED A.B. ANCHOR BLOCK (SEE NOTE 2)

KEEP CLEAR FROM FLANGE HARDWARE AND/OR 1" MIN. FROM FACE OF SLIP JOINT

NOTES:

1. ALL BARE METAL SURFACES OF VALVE AND ANCHOR SHALL BE COATED WITH EPOXY PAINT.
2. ANCHOR SHALL BE CLASS II A.B. AND SHALL BE POURED AGAINST UNDISTURBED SOIL.

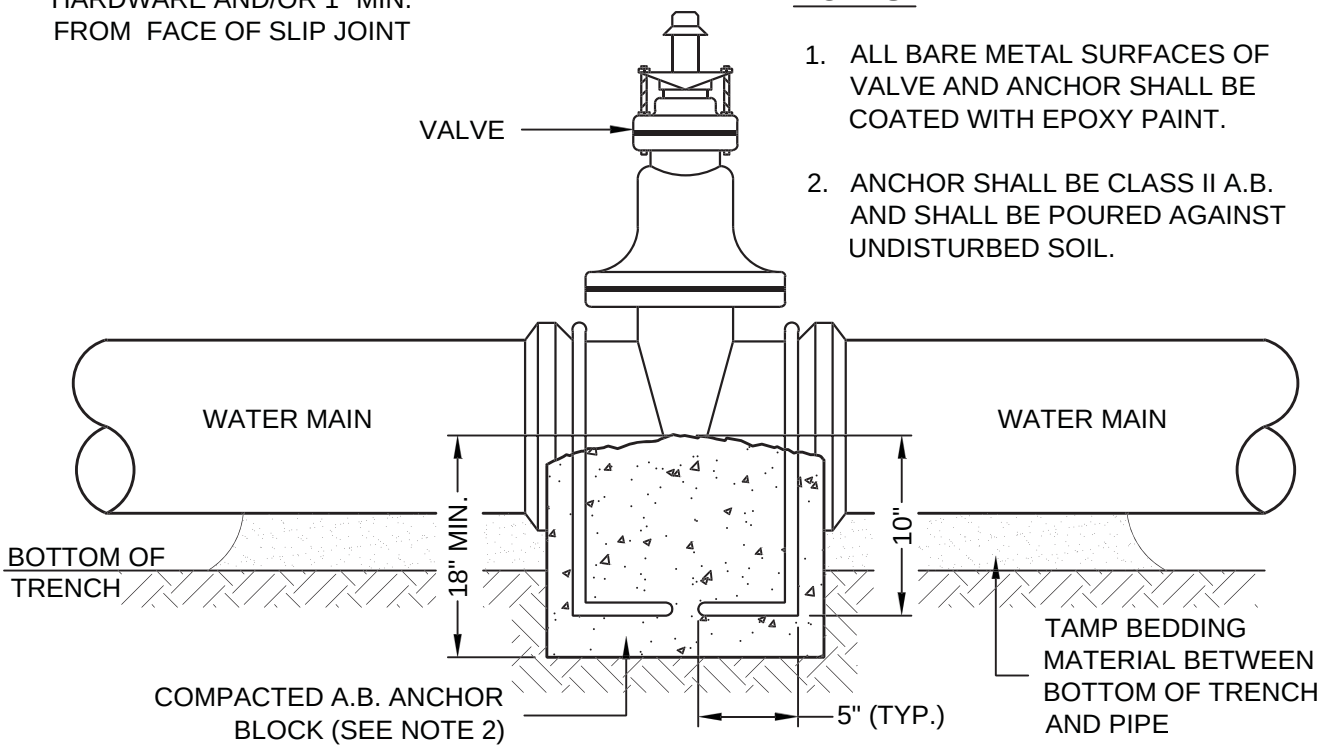

ELEVATION

(Not To Scale)

REGISTERED PROFESSIONAL ENGINEER
BALWINDER S. GREWAL
C 49122
EXP. 9/30/14
STATE OF CALIFORNIA

PUBLIC WORKS DEPARTMENT

THE CITY OF BRENTWOOD

BEDDING FOR VALVES UP TO 12" MAINS

BALWINDER S. GREWAL CITY ENGINEER

DATE: JUNE 20, 2003

REVISED: DEC. 31, 2013

SHEET No. **W-16**

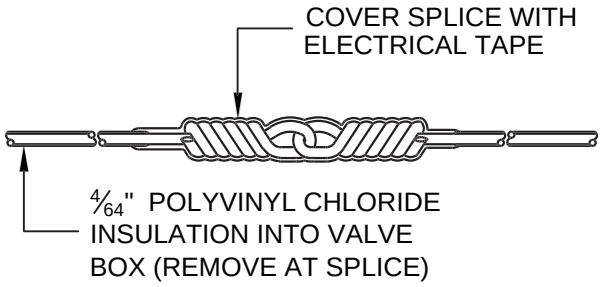

SPLICE DETAIL

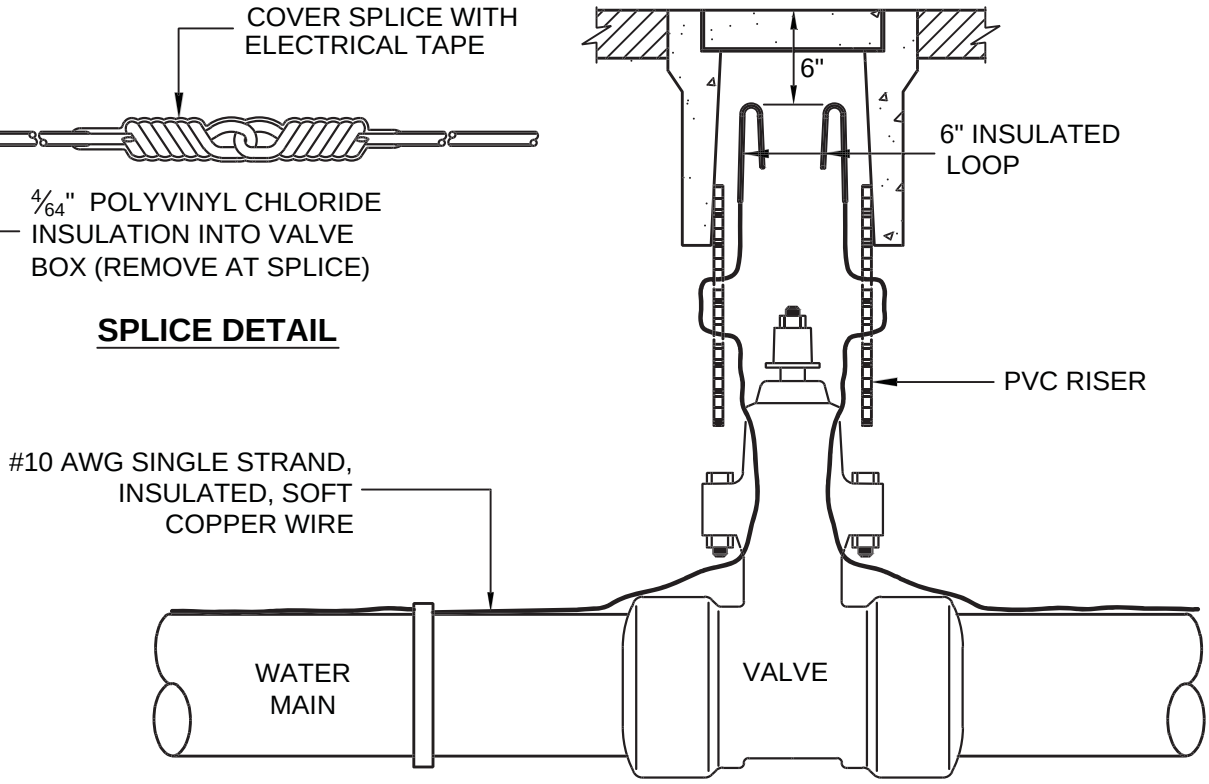

NOTES:

1. WIRE SHALL BE CONTINUOUS BETWEEN VALVE BOXES. UNLESS APPROVED OTHERWISE BY THE CITY ENGINEER, A WESTERN UNION SPLICE CONNECTION SHALL BE CONSTRUCTED, PER SPLICE DETAIL.
2. WIRE SHALL BE PLACED ON TOP OF THE WATER MAIN, AND SECURED WITH TAPE WRAPPED COMPLETELY AROUND THE MAIN AT 48" O.C.
3. LOCATING WIRE NOT REQUIRED FOR FIRE HYDRANTS AND WATER SERVICES.

(Not To Scale)

REGISTERED PROFESSIONAL ENGINEER
BALWINDER S. GREWAL
C 49122
EXP. 9/30/14
STATE OF CALIFORNIA

PUBLIC WORKS DEPARTMENT

THE CITY OF BRENTWOOD

LOCATING WIRE FOR PLASTIC MAINS

BALWINDER S. GREWAL CITY ENGINEER

DATE:	JAN. 31, 1999	SHEET No.
REVISED:	DEC. 31, 2013	W-17

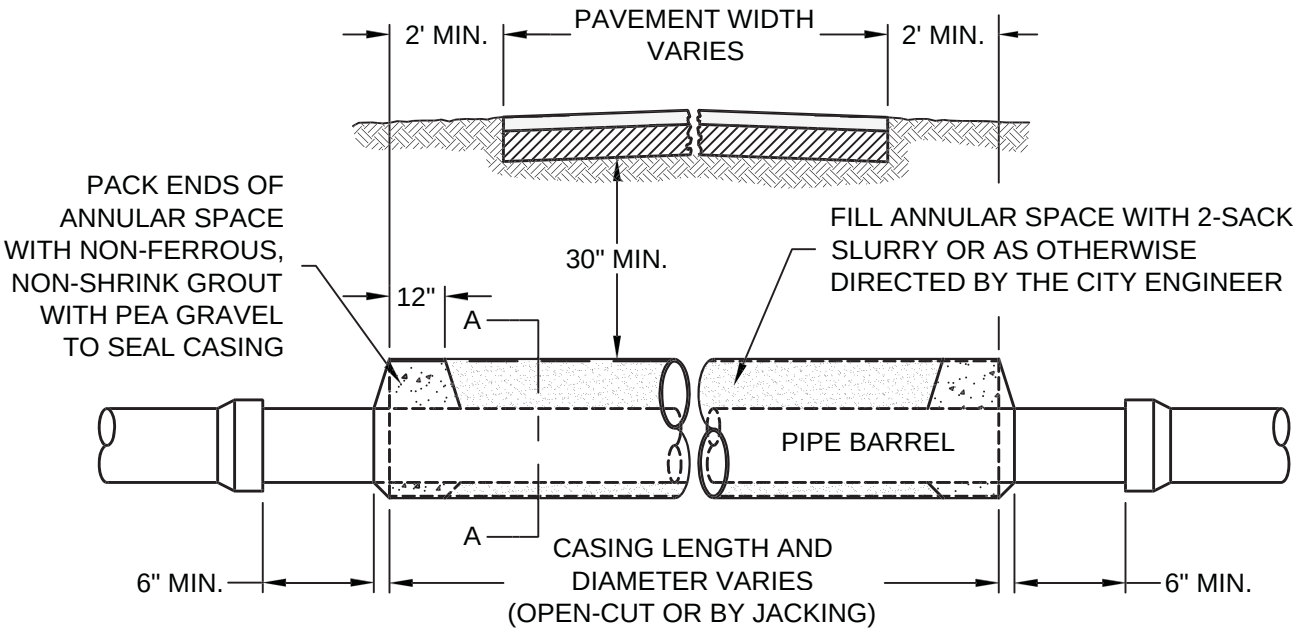

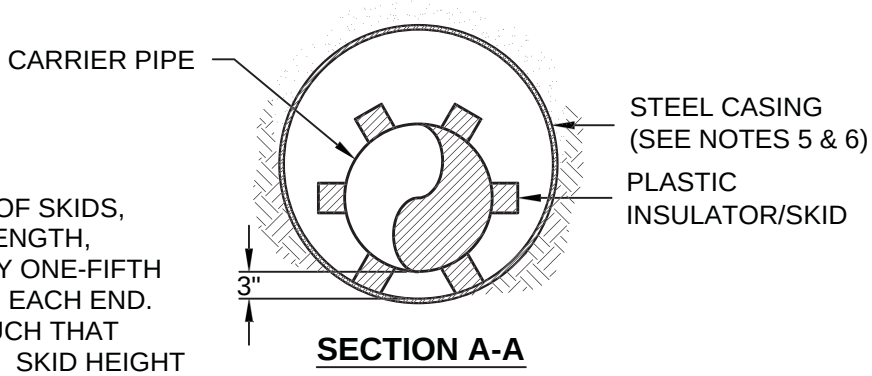

NOTES:

1. PIPES SHALL HAVE 2 PAIRS OF SKIDS, EACH 24 TO 30 INCHES IN LENGTH, CENTERED APPROXIMATELY ONE-FIFTH OF THE PIPE LENGTH FROM EACH END. SKIDS SHALL BE OF SIZE SUCH THAT BELL CLEARS CONDUCTOR. SKID HEIGHT SHALL NOT BE MORE THAN 50% OF THE WIDTH. SKIDS SHALL BE SECURED TO PIPE BY METAL BANDSTRAPS, ONE AT EACH END. GROOVE SKIDS FOR STRAP CLEARANCE.
2. AS APPLICABLE, SIZES AND LOCATIONS OF BORING AND RECEIVING PITS SHALL BE APPROVED IN ADVANCE BY THE CITY ENGINEER.
3. ALL CASING JOINTS ARE TO BE COATED AND WELDED WATERTIGHT, CONDUIT TO SLOPE SLIGHTLY IN ONE DIRECTION.
4. WATER PIPE SHALL BE JOINED WITH RESTRAINED PUSH-ON JOINTS.
5. IF CASING DIAMETER IS 30" OR LARGER, THE CONTRACTOR SHALL BE RESPONSIBLE FOR OBTAINING AN UNDERGROUND CLASSIFICATION FROM CAL-OSHA, MINING & TUNNELING UNIT.
6. INSTALL CATHODIC PROTECTION PER STANDARD PLAN CP-3.

(Not To Scale)

REGISTERED PROFESSIONAL ENGINEER
BALWINDER S. GREWAL
C 49122
EXP. 9/30/14
STATE OF CALIFORNIA

PUBLIC WORKS DEPARTMENT

THE CITY OF BRENTWOOD

CONDUCTOR CASING

BALWINDER S. GREWAL CITY ENGINEER

DATE: MAR. 12, 2001
REVISED: DEC. 31, 2013

SHEET No.
W-18

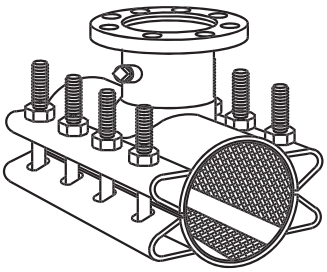

FLANGE-16-8 TYPE 304 STAINLESS STEEL WITH RECESS PER MSS SP50 TO ACCEPT STANDARD TAPPING VALVES. FLANGE CONFORMS TO AWWA C228 CLASS D ANSI 150# DRILLING. OPTIONAL CARBON STEEL FLANGE PER AWWA C207, IS AVAILABLE.

OUTLET PIPE - SCHEDULE 5, TYPE 304 STAINLESS STEEL EXCEPT 4" IS SCHEDULE 10

¾ - 14 STAINLESS STEEL TEST PLUG

OUTLET GASKET - VIRGIN BUNA-N COMPOUNDED FOR WATER SERVICE, PER ASTM D2000. OUTLET GASKET ASSURES COMPLETE SEAL OF OUTLET AREA.

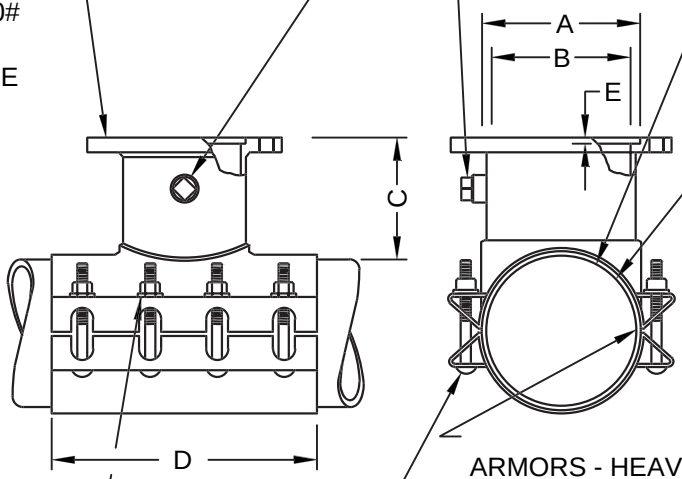

FULL GASKET - GRIDDED VIRGIN SBR COMPOUNDED FOR WATER SERVICE, PER ASTM D2000. FULL GASKET GIVES 360° PIPE COVERAGE.

ARMORS - HEAVY GAGE STAINLESS STEEL ARE VULCANIZED TO GASKET AND RECESSED TO BRIDGE THE GAP BETWEEN LUGS.

BOLTS, NUTS & WASHERS - TYPE 304 STAINLESS STEEL HEAVY HEX NUTS AND WASHERS ARE COATED TO PREVENT GATING AND MAXIMIZE BOLT EFFICIENCY.

3/16" LUG (¼" LUG IF USING A ¾" BOLT)

TAPPING SLEEVE WITH STAINLESS STEEL OR CARBON STEEL FLANGE

NOTE:

1. SOURCE IS FORD METER BOX COMPANY INC OR APPROVED EQUAL.

(Not To Scale)

REGISTERED PROFESSIONAL ENGINEER
BALWINDER S. GREWAL
C 49122
EXP. 9/30/14
STATE OF CALIFORNIA

PUBLIC WORKS DEPARTMENT

THE CITY OF BRENTWOOD

TAPPING SLEEVES 4" TO 12" DETAILS

BALWINDER S. GREWAL CITY ENGINEER

DATE: DEC. 31, 2013

REVISED:

SHEET No. W-19

NOM. PIPE SIZE	SLEEVE O.D. RANGE	CATALOG NUMBER		FLANGED OUTLET SIZE*	APPROX. WT.	NOMINAL DIMENSIONS-INCHES					SADDLE THICKNESS (GAGE)	STRAP THICKNESS (GAGE)	BOLT SIZE	SUBMITTED ITEM(S)
						A	B	C	D	E				
4"	4.50-4.80 4.80-5.00	FTSS-480- FTSS-500-		3"	36	4 - 1/64"	3 - 15/32"	5 - 3/16"	15"	.28	.105"(12)	.075"(14)	5/8" x 6 - 1/2"	
	5.10-5.30 5.20-5.40	FTSS-530- FTSS-540-		4"	38	5 - 1/32"	4 - 1/4"	5 - 3/16"	15"	.28				
6"	6.63-7.00 6.63-7.00 7.30-7.50	FTSS-700- FTSS-730- FTSS-750-		3"	40	4 - 1/64"	3 - 15/32"	5 - 3/16"	15"	.28				
				4"	42	5 - 1/32"	4 - 1/4"	5 - 3/16"	15"	.28				
				6"	47	7 - 1/32"	6 - 3/8"	5 - 1/2"	15"	.34				
8"	8.63-9.05 9.05-9.30 9.30-9.60 9.45-9.75	FTSS-905- FTSS-930- FTSS-950- FTSS-975-		3"	40	4 - 1/64"	3 - 15/32"	5 - 3/16"	15"	.28				
				4"	42	5 - 1/32"	4 - 1/4"	5 - 3/16"	15"	.28				
				6"	49	7 - 1/32"	6 - 3/8"	5 - 1/2"	15"	.34				
				8"	75	9 - 1/32"	8 - 5/16"	5 - 5/8"	20"	.34				
10"	10.75-11.10 11.10-11.40 11.40-11.70 11.85-12.15	FTSS-1110- FTSS-1140- FTSS-1170- FTSS-1215-		3"	44	4 - 1/64"	3 - 15/32"	5 - 3/16"	15"	.28				
				4"	47	5 - 1/32"	4 - 1/4"	5 - 3/16"	15"	.28				
				6"	53	7 - 1/32"	6 - 3/8"	5 - 1/2"	15"	.34				
				8"	79	9 - 1/32"	8 - 5/16"	5 - 5/8"	20"	.34				
				10"	99	11 - 1/32"	10 - 1/4"	6 - 1/8"	20"	.34				
12"	12.75-13.20 13.20-13.50 13.50-13.80 14.10-14.40	FTSS-1320- FTSS-1350- FTSS-1360- FTSS-1440-		3"	44	4 - 1/64"	3 - 15/32"	5 - 3/16"	15"	.28				
				4"	50	5 - 1/32"	4 - 1/4"	5 - 3/16"	15"	.28				
				6"	55	7 - 1/32"	6 - 3/8"	5 - 1/2"	15"	.34				
				8"	56	9 - 1/32"	8 - 5/16"	5 - 5/8"	20"	.34				
				10"	104	11 - 1/32"	10 - 1/4"	5 - 1/8"	20"	.34				
				12"	138	13 - 1/32"	12 - 1/4"	5 - 1/4"	24"	.34				

* TO ORDER: ADD FLANGED OUTLET SIZE TO CATALOG NUMBER. EXAMPLE: THE COMPLETE FTSS CATALOG NUMBER FOR A 6" PIPE (6.90 O.D.) WITH A 4" STAINLESS STEEL FLANGE IS FTSS-730-4. FOR A CARBON STEEL FLANGE, ADD "A" TO THE CATALOG NUMBER. EXAMPLE: FTSS-710-4A.

(Not To Scale)

REGISTERED PROFESSIONAL ENGINEER
BALWINDER S. GREWAL
C 49122
EXP. 9/30/14
STATE OF CALIFORNIA

PUBLIC WORKS DEPARTMENT

THE CITY OF BRENTWOOD

TAPPING SLEEVES 4" TO 12" TABLE

BALWINDER S. GREWAL CITY ENGINEER

DATE: DEC. 31, 2013

REVISED:

SHEET No.
W-19a

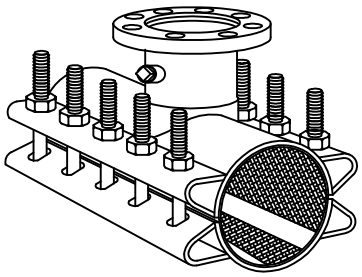

FLANGE-18-8 TYPE 304 STAINLESS STEEL WITH RECESS PER MSS SP60 TO ACCEPT STANDARD TAPPING VALVES. FLANGE CONFORMS TO AWWA C228 CLASS D ANSI 150# DRILLING. OPTIONAL CARBON STEEL FLANGE PER AWWA C207, IS AVAILABLE.

OUTLET PIPE - SCHEDULE 5, TYPE 304 STAINLESS STEEL EXCEPT 4" IS SCHEDULE 10

¾ - 14 STAINLESS STEEL TEST PLUG

OUTLET GASKET - VIRGIN BUNA-N COMPOUNDED FOR WATER SERVICE, PER ASTM D2000. OUTLET GASKET ASSURES COMPLETE SEAL OF OUTLET AREA.

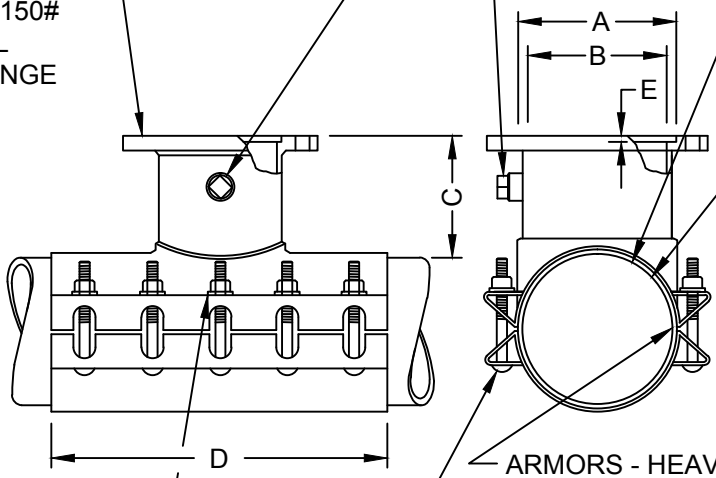

FULL GASKET - GRIDDED VIRGIN SBR COMPOUNDED FOR WATER SERVICE, PER ASTM D2000. FULL GASKET GIVES 360° PIPE COVERAGE.

ARMORS - HEAVY GAGE STAINLESS STEEL ARE VULCANIZED TO GASKET AND RECESSED TO BRIDGE THE GAP BETWEEN LUGS.

3/16" LUG (¼" LUG IF USING A ¾" BOLT)

BOLTS, NUTS & WASHERS - TYPE 304 STAINLESS STEEL HEAVY HEX NUTS AND WASHERS ARE COATED TO PREVENT GATING AND MAXIMIZE BOLT EFFICIENCY.

TAPPING SLEEVE WITH STAINLESS STEEL OR CARBON STEEL FLANGE

NOTE:

1. SOURCE IS THE FORD METER BOX COMPANY INC OR APPROVED EQUAL.

(Not To Scale)

REGISTERED PROFESSIONAL ENGINEER
JAGTAR SINGH DHALIWAL
C 54919
EXP. 6/30/16
STATE OF CALIFORNIA

PUBLIC WORKS DEPARTMENT

THE CITY OF BRENTWOOD

TAPPING SLEEVES 14" TO 24" DETAILS

Jagtar Dhaliwal

JAGTAR SINGH DHALIWAL, INTERIM CITY ENGINEER

DATE: FEB. 5, 2016

REVISED:

SHEET No.

W-19b

NOM. PIPE SIZE	SLEEVE O.D. RANGE	CATALOG NUMBER	FLANGED OUTLET SIZE*	APPROX. WT.	NOMINAL DIMENSIONS-INCHES					SADDLE THICKNESS (GAGE)	STRAP THICKNESS (GAGE)	BOLT SIZE	NO. BOLTS	SUBMITTED ITEM(S)
					A	B	C	D	E					
14"	15.30-15.70	FTSS-1570-	3"	73	4-1/64	3-1/4	5-3/16	16	.24	.105"(12)	.075"(14)	¾" x 8 - ½"	10	
			4"	75	5-1/64	4-1/4	5-3/16	16	.28				10	
	15.80-16.20	FTSS-1620-	6"	82	7-1/64	6-13/32	5-1/2	16	.34				10	
			8"	102	9-1/64	8-13/32	5-5/8	20	.34				12	
	16.48-16.88	FTSS-1688-	10"	110	11-1/64	10-31/64	6-1/8	20	.34				12	
			12"	146	13-1/64	12-27/64	6-1/4	24	.34				14	
16"	17.20-17.60	FTSS-1760-	3"	76	4-1/64	3-1/4	5-3/16	16	.24	.105"(12)	.075"(14)	¾" x 8 - ½"	10	
	17.40-17.80	FTSS-1780-	4"	78	5-1/64	4-1/4	5-3/16	16	.28				10	
	17.75-18.15	FTSS-1815-	6"	84	7-1/64	6-13/32	5-1/2	16	.34				10	
			8"	104	9-1/64	8-13/32	5-5/8	20	.34				12	
	18.15-18.60	FTSS-1860-	10"	114	11-1/64	10-31/64	6-1/8	20	.34				12	
	18.80-19.20	FTSS-1920-	12"	150	13-1/64	12-27/64	6-1/4	24	.34				14	
18"	19.50-19.92	FTSS-1992-	3"	82	4-1/64	3-1/4	5-3/16	16	.24	.105"(12)	.075"(14)	¾" x 8 - ½"	10	
			4"	84	5-1/64	4-1/4	5-3/16	16	.28				10	
			6"	90	7-1/64	6-13/32	5-1/2	16	.34				10	
			8"	112	9-1/64	8-13/32	5-5/8	20	.34				12	
	19.80-20.20	FTSS-2020-	10"	120	11-1/64	10-31/64	6-1/8	20	.34				12	
			12"	160	13-1/64	12-27/64	6-1/4	24	.34				14	
20"	20.20-20.60	FTSS-2060-	3"	84	4-1/64	3-1/4	5-3/16	16	.24	.105"(12)	.075"(14)	¾" x 8 - ½"	10	
			4"	86	5-1/64	4-1/4	5-3/16	16	.28				10	
			6"	92	7-1/64	6-13/32	5-1/2	16	.34				10	
			8"	114	9-1/64	8-13/32	5-5/8	20	.34				14	
	21.20-21.60	FTSS-2160-	10"	123	11-1/64	10-31/64	6-1/8	20	.34				14	
			12"	162	13-1/64	12-27/64	6-1/4	24	.34				16	
24"	23.80-24.20	FTSS-2420-	3"	95	4-1/64	3-1/4	5-3/16	16	.24	.105"(12)	.075"(14)	¾" x 8 - ½"	10	
			4"	97	5-1/64	4-1/4	5-3/16	16	.28				10	
	25.60-26.00	FTSS-2600-	6"	103	7-1/64	6-13/32	5-1/2	16	.34				10	
			8"	127	9-1/64	8-13/32	5-5/8	20	.34				14	
	26.20-26.60	FTSS-2660-	10"	136	11-1/64	10-31/64	6-1/8	20	.34				14	
			12"	178	13-1/64	12-27/64	6-1/4	24	.34				16	

* TO ORDER: ADD FLANGED OUTLET SIZE TO CATALOG NUMBER. EXAMPLE: THE COMPLETE FTSS CATALOG NUMBER FOR A 16" PIPE (18.15 O.D.) WITH A 12" STAINLESS STEEL FLANGE IS FTSS-1860-12. ADD "-SP" FOR OPTIONS STAINLESS STEEL TEST PLUG. FOR CARBON STEEL FLANGE ADD "A" TO THE NUMBER.

NOTES:

1. UL CLASSIFIED TO ANSI/NSF STANDARD 61 ANNEX G
2. COMPLIES WITH AWWA C223 AND MSS SP-124
3. ALL SLEEVES FULLY PASSIVATED FOR CORROSION RESISTANCE
4. RATED FOR 200 PSI SIZES 14"-16", 175 PSI SIZES 18"-20", AND 150 PSI IN 24"

(Not To Scale)

REGISTERED PROFESSIONAL ENGINEER
JAGTAR SINGH DHALIWAL
C 54919
EXP. 6/30/16
STATE OF CALIFORNIA

PUBLIC WORKS DEPARTMENT

THE CITY OF BRENTWOOD

TAPPING SLEEVES 14" TO 24" TABLE

Jagtar Dhaliwal

JAGTAR SINGH DHALIWAL, INTERIM CITY ENGINEER

DATE: FEB. 5, 2016

REVISED:

SHEET No.

W-19c

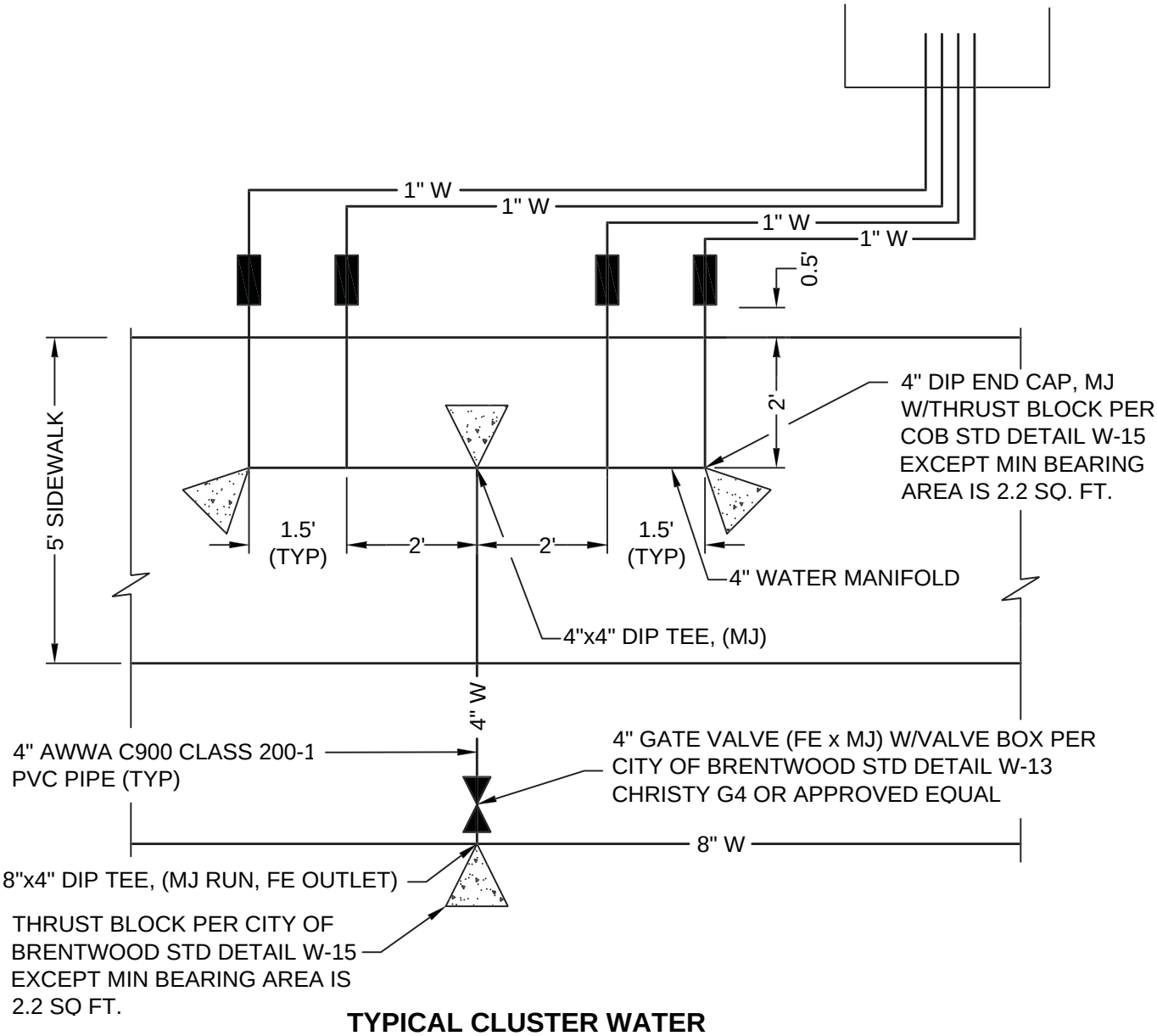

TYPICAL CLUSTER WATER SERVICE MANIFOLD LAYOUT

NOTES:

1. FOR PRIVATE COURT CLUSTER WATER SERVICES, NUMBER OF WM BOXES VARIES FROM 2 MIN. TO 4 MAX. SEE PLAN FOR EXACT CONFIGURATION AT EACH LOCATION.
2. ALL BOLTS CONNECTION TO THE WATERLINE SHALL BE STAINLESS STEEL.
3. DUCTILE IRON FITTINGS SHALL BE CATHODICALLY PROTECTED IN ACCORDANCE WITH CITY OF BRENTWOOD STANDARDS.

(Not To Scale)

REGISTERED PROFESSIONAL ENGINEER
BALWINDER S. GREWAL
C 49122
EXP. 9/30/14
STATE OF CALIFORNIA

PUBLIC WORKS DEPARTMENT

THE CITY OF BRENTWOOD

TYPICAL CLUSTER WATER SERVICE MANIFOLD LAYOUT

BALWINDER S. GREWAL CITY ENGINEER

DATE: DEC. 31, 2013

REVISED:

SHEET No. **W-20**

RESOLUTION NO. 97-72

A RESOLUTION OF THE CITY COUNCIL OF THE CITY OF BRENTWOOD PROVIDING FOR UPDATING THE CITY OF BRENTWOOD STANDARD PLANS AND SPECIFICATIONS, ESTABLISHMENT OF MINIMUM STANDARDS FOR CONSTRUCTION OF PUBLIC AS WELL AS PRIVATELY-OWNED IMPROVEMENTS WITHIN THE CITY, AND AUTHORIZING THE CITY ENGINEER TO MAKE APPROPRIATE REVISIONS TO THE STANDARD PLANS, SPECIFICATIONS AND MINIMUM STANDARDS AS NECESSARY TO MAINTAIN FUTURE QUALITY CONSTRUCTION.

WHEREAS, the current City of Brentwood Standard Plans and Specifications have been developed as needed, and should now be brought in line with current technology, materials and industry standards; and

WHEREAS, construction of sub-standard improvements on privately-owned lands within the City can result in future high maintenance burden to residents within these areas.

NOW, THEREFORE, BE IT RESOLVED by the City Council of the City of Brentwood, that the City's Standard Plans and Specifications be reviewed and updated; and

BE IT FURTHER RESOLVED that minimum standards for construction of public as well as privately-owned improvements within the City be established; and

BE IT FURTHER RESOLVED that the City Engineer is authorized to make future appropriate revisions to the Standard Plans, Specifications and minimum standards as necessary..

PASSED by the City Council of the City of Brentwood, at its regular meeting of April 22, 1997, by the following vote:

AYES: Councilmembers Guise, Petrovich, Kidd, McPoland & Mayor Morrill

NOES: None

ABSENT: None

ABSTAIN: None

Approved:

John Morrill, Mayor

Attest:

Donna J. Rogers, Deputy City Clerk

JES:PD:bd

stfrpts/res97-72

STAFF REPORT—NEW BUSINESS

TO BE CONSIDERED AT THE COUNCIL MEETING OF APRIL 22, 1997

FROM: ENGINEERING DEPARTMENT (J. Stevenson/P. Dodane)

SUBJECT: **PASSAGE OF RESOLUTION 97-72, PROVIDING FOR UPDATING THE CITY OF BRENTWOOD STANDARD PLANS AND SPECIFICATIONS, ESTABLISHMENT OF MINIMUM STANDARDS FOR CONSTRUCTION OF PUBLIC AS WELL AS PRIVATELY-OWNED IMPROVEMENTS WITHIN THE CITY, AND AUTHORIZING THE CITY ENGINEER TO MAKE APPROPRIATE REVISIONS TO THE STANDARD PLANS, SPECIFICATIONS AND MINIMUM STANDARDS AS NECESSARY TO MAINTAIN FUTURE QUALITY CONSTRUCTION.**

RECOMMENDATION: Staff respectfully recommends passage of Resolution No. 97-72, providing for updating the City of Brentwood Standard Plans and Specifications, establishment of minimum standards for construction of public as well as privately-owned improvements within the City, and authorizing the City Engineer to make appropriate revisions to the Standard Plans, Specifications and minimum standards as necessary to maintain future quality construction.

POLICY IDENTIFICATION: It is the policy of the City to update the City of Brentwood Standard Plans and Specifications on a regular basis to establish Minimum Standards for Construction of public as well as privately owned improvements. These updates are prepared by staff to maintain the latest standards and technology of engineering construction. When a significant amount of changes are proposed, the document is submitted to City Council for approval.

BACKGROUND: The current City of Brentwood Standard Plans and Specifications have been developed over a period of time as needed. In addition, construction of improvements on privately-owned lands within the City, over which the City currently does not have adequate regulatory standards, can result in future high maintenance costs to the residents within these areas. In keeping abreast of current technology, materials available and industry standards, it is appropriate at this time that the City performs a comprehensive review of its design and regulating standards as applied to construction within public as well as privately-owned areas in the City.

DISCUSSION: Staff believes that the City has a responsibility to all its residents to maintain the highest possible level of construction quality, while maintaining a reasonable balance between construction standards and prudent expenditure of funds. In keeping with this responsibility, members of staff have met to discuss and identify those sections within our standard plans and specifications that need a close review, and revision as applicable.

To maintain future high quality of construction it is recommended that on-going reviews be performed, and that the City Engineer be given authority by Council to make revisions to the Standard Plans, Specifications and minimum standards as necessary and appropriate.

ALTERNATIVES:

1) Staff recommends the passage of Resolution 97-72, providing for the updating of the City of Brentwood Standard Plans and Specifications and the establishment of minimum standards for construction of public as well as privately-owned improvements within the City of Brentwood.

2) Keep the old Standard Plans and Specifications as is and do not make the updates.

FISCAL IMPACT: Design, inspection and administrative costs can be expected to be reduced slightly as a result of clearer and more up-to-date City-construction-requirements. Meetings between developers, contractors and staff should lessen as information regarding City requirements is elevated to current industry standards.

JES:bd
Attachment

stfrpt/Rpt97-72

APPENDIX B

THE CITY OF BRENTWOOD

HERITAGE • VISION • OPPORTUNITY

PARK/MEDIAN FEATURES INVENTORY

Park Name/Street Median Location:			
Date:	Park:	LLD:	Name of Person Performing Inventory:

			Totals				Totals
Total Area	AC			Other Items			
Catch Basins	EA			Soccer Field/Ballfield	EA		
V-Ditch	LF			Lights	EA		
Signs	EA			Restrooms	EA		
Total Bedding Area	AC			Buildings	EA		
Ground Cover	AC			Playcourts	EA		
Turf	AC			Drinking Fountain	EA		
Edging	LF			Fence/Soundwall	LF		
Shrubs	EA			Playground	SF		
Annual Color	SF			Water Play Feature	EA		
Open Space	AC			Deck Cleaning	EA		
Gravel Path	SF			Trees	EA		
Asphalt Walkway	SF			BBQ Pits			
Concrete Walkway	SF			Tables	EA		
Painted Curb	LF			Benches	EA		
Hardscape	SF			Panel/Electrical	EA		
Arbor/Trellis				Trash Receptacles	EA		
Irrigation Systems				Other (Specify)			
Irrigation Controller	EA						
Irrigation Stations	STA						
Irrigation Head	EA						
Irrigation Valves	EA						
Backflow Device	EA						
Booster Pump	EA						

Comment:

MEAN TURFGRASS QUALITY RATINGS
Of Tall Fescue Cultivars in Sunnyvale, California (2007-2011)

Name	Turf score
Firecracker LS (MVS-MST)	6.6
Faith (K06-WA)	6.4
Monet (LTP-610 CL)	6.4
Bullseye	6.3
Cochise IV (RKCL)	6.3
Essential (IS-TF-154)	6.3
Falcon V (ATM)	6.3
RK 5	6.3
RK 4	6.2
Shenandoah Elite (RK 6)	6.2
Tanzania (IS-TF-159)	6.2
Traverse SRP (RK-1)	6.2
Wolfpack II (PST-5WMB)	6.2
3rd Millennium SRP	6.1
Cannavaro (DP 50-9440)	6.1
Garrison (IS-TF-153)	6.1

Name	Turf score
Jamboree (IS-TF-128)	6.1
LS 1200 (SC-1)	6.1
Shenandoah III (SH 3)	6.1
Sidewinder (IS-TF-138)	6.1
Spyder LS (Z-2000)	6.1
Turbo	6.1
Catalyst (NA-BT-1)	6.0
Firenza	6.0
Greenbrooks (TG 50-9460)	6.0
Guardian 41 (STR-8BB5)	6.0
Mustang 4 (M4)	6.0
Talladega (RP 3)	6.0
Terrier (IS-TF-135)	6.0
Toccoa (IS-TF-151)	6.0
Turbo RZ (BURL-TF8)	6.0
Van Gogh (LTP-RK2)	6.0

LSD Value* = 0.6

*LSD Value: To determine statistical differences between varieties, subtract one variety's mean from another variety's mean. Statistical differences between 2 varieties occur when this value is equal or lower than the LSD value (Least Significant Difference).